Agenda
City of Springboro Planning Commission Meeting
Wednesday, July 12, 2023, 6:00 p.m.
Council Chambers, City Building, 320 West Central Avenue

I. Call to Order

II. Approval of Minutes

A. June 14, 2023 Planning Commission Meeting

III. Public Hearing

A. Major Revision, Village Park PUD-MU, Planned Unit Development-Mixed Use, Southwest Corner North Main Street (SR 741) and Pennyroyal Road, change in list of permitted uses in retail component

IV. Agenda Items

A. Final Approval, Site Plan Review, 3233 South Tech Boulevard, proposed new Innomark building

B. Final Approval, Site Plan Review, 25 West Central Avenue (SR 73), new River Valley Credit Union branch

C. Final Approval, Final Development Plan, South Southwest Corner East Central Avenue (SR 73) and Red Lion-Five Points Road, Clearview Crossing PUD-R, Planned Unit Development-Residential, residential subdivision

D. Preliminary Review, Final Development Plan, Village Park PUD-MU, Planned Unit Development-Mixed Use, office component, Southwest of Intersection of Gardner Road and Village Park Drive, proposed fire station

E. Preliminary Review, Rezoning, R-1, Estate-Type Residential District, to PUD-R, Planned Unit Development-Residential, 1525 South Main Street (SR 741), proposed single-family residential subdivision

F. Preliminary Review, General Plan, R-1, Estate-Type Residential District, to PUD-R, Planned Unit Development-Residential, 1525 South Main Street (SR 741), proposed single-family residential subdivision

V. Guest Comments

VI. Planning Commission and Staff Comments

VII. Adjournment

Note: Additional items may be added to this agenda based on the review of the case at the 6:00 p.m. Planning Commission Public Hearing at the discretion of the Planning Commission.

Background Information & Staff Comments/Recommendations
City of Springboro Planning Commission Meeting
Wednesday, July 12, 2023, 6:00 p.m.
Council Chambers, City Building, 320 West Central Avenue

III. Public Hearing

A. Major Revision
Village Park PUD-MU, Planned Unit Development-Mixed Use, Southwest Corner North Main Street (SR 741) and Pennyroyal Road, change in list of permitted uses in retail component

The Public Hearing is in regards to a petition to revise the approved general plan for the retail component of the Village Park PUD-MU, Planned Unit Development-Mixed Use, located southwest of the intersection of North Main Street (SR 741) and Pennyroyal Road. The application requests the deletion of the prohibition on drive-in and drive-through facilities in the retail component only. The Village Park PUD-MU was approved in September 2004 and at present allows the 80-acre PUD to be used for residential, office, retail, and open space uses.

The Public Hearing will be limited to 30 minutes; 15 minutes reserved for the opponents, and 15 minutes reserved for the proponents.

Background Information

This agenda item is a request for a major revision to the approved general plan for the Village Park PUD-MU, Planned Unit Development-Mixed Use. The revision would remove the current prohibition on drive-in and drive-through facilities in the retail component of the PUD. The Village Park PUD-MU, approved in 2004, includes four components including the retail component located on the southeast corner of the property

General plan review is part of the first step in the three-step PUD approval process. The proposed use change is defined as a major revision under the terms of Chapter 1266, Planned Unit Developments, of the Planning & Zoning Code. To process the major revision a Public Hearing of Planning Commission will need to be conducted similar to the process used for the processing of rezoning applications by City Council. Following the Public Hearing, a motion will need to be made to approve the major revision in the form of a recommendation to City Council. City Council will then review the major change in the form of a Resolution. There is no Public Hearing of City Council on the requested change.

This agenda item is based on an application filed by Dryden Builders, Centerville, and stemmed from a request for final development plan approval of a plan for a new retail development immediately south of Springboro Wine & Spirits, 748 North Main Street. Both properties are owned by Sahana Properties, LLC. That final development plan included a small retail building fronting North Main Street and wrapped with a drive-though. That final development plan's review cannot proceed until the general plan review is concluded. As mentioned in the June 14th Planning Commission staff report, this will allow the applicant time to submit a more complete final development plan application, and to work with City staff on a traffic study.

Adjacent uses to the subject property include Springboro Wine & Spirits to the north, Huntington Bank to the east on the east side of North Main Street, Biggby's/Farmers & Merchants Bank to the south, and vacant land to the west on the west side of Gardner Road.

Zoning adjacent to the subject property is PUD-MU, for properties to the north, south, and west as part of the Village Park mixed-use development, and PUD for property to the east that is part of the Settlers Walk development on the east side of North Main Street.

Staff Recommendation

Following the Public Hearing, City recommends approval of the major revision to the general plan for the Village Park PUD-MU, retail component.

Comments related to the plans submitted for the June 14th Planning Commission meeting remain applicable for when then final development plan is reviewed.

IV. Agenda Items

Note: One additional item may be added to this portion of the agenda based on the outcome of the 6:00 p.m. Public Hearing at the discretion of the Planning Commission.

A. Final Approval
Site Plan, 3233 South Tech Boulevard, new commercial building for Innomark

Background Information

This agenda item is a request for final approval of a site plan for the construction of a 96,000-square foot office/manufacturing/warehouse building for Innomark Real Estate, LLC, property owner at 3233 South Tech Boulevard in the South Tech Business Park. This item was reviewed at the June 14th Planning Commission meeting at which time this item was authorized for final approval at a future meeting.

Adjacent land uses include to the north, undeveloped land that is in the Springboro portion of the Austin Landing development fronting the I-75/Austin Boulevard interchange, to the east Innomark's existing facility at 3233 South Tech Boulevard, to the south Invotec at 10909 Industry Lane on the southwest corner of Industry Lane and South Tech Boulevard, and Kingscoat at 3334 South Tech Boulevard, and to the west Renegade at 3363 South Tech Boulevard.

Adjacent zoning to the north is ADD-2, Austin Development District 2, and to the east, south, and west, ADD-1, Austin Development District 1.

Staff Recommendation

City staff recommends approval of the site plan for the proposed Innomark facility with the following conditions. Applicant to note that staff comments may continue to be resolved concurrent to the review processes for the building and site.

1. Proposed lighting fixtures are acceptable in design and color-temperature standards with the exception of the square canopy light which is used in one location. Areas along east side of proposed building exceed 6.0 foot-candle maximum intensity.
2. Signage plan for building/site subject to review by Zoning Inspector for compliance with Sign Code, Chapter 1281, of Planning and Zoning Code outside of the site plan review process.
3. Cannot verify storm sewer design without pipe lengths. Add pipe lengths on all storm runs. Check depth of MH #17 to verify the correct slope for the tie into the existing storm along South Tech Boulevard. Call out proposed MH #18 to be a doghouse manhole.
4. Montgomery County to review water and sewer design. Water line testing (if any) will be per Montgomery County standards. Revise note on sheet C-1.3 accordingly.
5. An "AS BUILT" drawing showing as built location and elevations of all improvement shall be submitted prior to the issuance of an occupancy permit
6. Clearcreek Fire District does not have comments at this time.

B. Final Approval
Site Plan Review, 25 West Central Avenue (SR 73), new River Valley Credit Union branch

Background Information

This agenda item is a request for final approval, based on an application submitted by Berardi+Partners, Columbus, Ohio on behalf of the property owners, proposing the construction a new River Valley Credit Union branch at 25 West Central Avenue (SR 73). This item was reviewed on a preliminary basis at the March 8th Planning Commission meeting. The ATM/ITM was approved at the April 12th Planning Commission meeting. The site is currently occupied by a River Valley Credit Union branch that includes a drive through. Under this proposal, the applicants propose to (1) construct of a new stand-alone drive-through facility to maintain operation on the property during redevelopment, (2) demolish the existing branch building, and (3) construct a new 2,490-square foot branch location as indicated in the submitted materials.

The subject property is located at the southwest corner of West Central Avenue (SR 73) and Florence Drive. Access is provided to the site from both streets in the existing and proposed plans, however the number of curb cuts on the Florence Drive frontage has been significantly revised in the proposed site plan.

The subject property is zoned UVD, Urban Village District. While the applicant has been advised that the proposed use is permitted, the redevelopment of the site and any other in the UVD will need to comply with the design and development standards of the UVD in addition to the standard site plan review requirements.

Existing land uses include to the east include a vacant City-owned parcel at the southwest corner of South Main Street (SR 741) and West Central Avenue (SR 73), and a multi-tenant building located at 20 South Main Street. To the south is the former site of Jonathan Wright Elementary School, to the west is Republic Mortgage at 55 West Central Avenue, and to the north on the north side of West Central Avenue (SR 73) is the developing Wright Station mixed-use area.

Existing zoning in the vicinity of the subject property is UVD to the east, west, and north, and R-2, Low-Density Residential District, on the former site of Jonathan Wright Elementary School.

Staff Recommendation

City staff recommends approval of the site plan for 25 West Central Avenue for River Valley Credit Union's new branch location subject to the following comments:

1. For lighting plan, confirm with City staff U.S. Architectural Lighting selected design, photometric analysis exceeds permitted levels near the ATM/ITM canopy, and provide information for proposed architectural lighting proposed for the west and north elevations.
2. Signage plan to be reviewed by Zoning Inspector for compliance with Chapter 1281, Signs. That review is separate from the site plan review process.
3. Monument sign minimum setbacks from right of way is 8 feet. Sheet C200 – Remove site keynote 16 from the curb and gutter section on the site plan; that is keynote 7. Add detail for ODOT Type 2 curb and gutter on sheet C202. Depress the curb and gutter at the drive aprons, note accordingly on plans.
4. Provide record plan dedicating the additional right of way.
5. Sheet C400 – Utility Keynote 5 – Water Service lateral to be "K" copper material; revise accordingly. Revise Keynote 7 to be a direct tap to existing water main, and not a tapping sleeve. Add info for keynote 4. Utility plan note 2 – water line cover to be minimum 54". Remove utility note #10 to state water main shall be class 52 ductile iron.
6. Remove curb and gutter on SR 73 accordingly and replace with ODOT Type 2 depressed curb and gutter. Add details on plan.
7. Sanitary sewer lateral to be tapped straight into existing main with sweeping wye, and remove riser in street. Add cleanouts in the sewer lateral in the parking lot at all bends. Lateral to be SDR 35 or SCH 40 material (utility note 8 – sheet C400).
8. An "AS BUILT" drawing showing as built location and elevations of all improvement shall be submitted prior to the issuance of an occupancy permit.
9. Clearcreek Fire District does not have comments at this time.

C. Final Approval
Final Development Plan, Southwest Corner East Central Avenue (SR 73) and Red Lion-Five Points Road, Clearview Crossing at Stoneridge PUD-R, Planned Unit Development-Residential, residential subdivision.

Background Information

This agenda items is a request for final approval of the final development plan filed by LSSE, Dublin, Ohio, on behalf of Maronda Homes of Cincinnati. The final development plan would allow for the development of a 41-dwelling unit subdivision by Maronda Homes on the southwest corner of East Central Avenue (SR 73) and Red Lion-Five Points Road. The 12.08-acre site was rezoned to PUD-R, Planned Unit Development-Residential, earlier this year concurrently to the approval of a general plan outlining the plan for the conceptual layout of lots, streets, and open space in the subdivision. The rezoning and general plan were approved by the Planning Commission at their January 18th meeting; the rezoning was approved by City Council on April 6th (effective date May 6th) along with the general plan.

Final development plan review is the second stage of the three-step approval process for PUDs. The final development plan provides more detailed information, building on the general plan including proposed lots, streets, and open space. No action is required of City Council on the final development plan. Record plan review and approval by both Planning Commission and City Council is the last step in the PUD approval process.

Adjacent land uses in Springboro include the North Hills subdivision to the north on the north side of East Central Avenue (SR 73), and The Enclave subdivision to the south. In Clearcreek Township, single-family residential in the Stoneridge subdivision to the east, and to the west single-family residential along the south side of East Central Road, and on the north side of East Central Road farmland.

Adjacent zoning in the Springboro portion of the vicinity is PUD-R for both North Hills and The Enclave. In Clearcreek Township the Stoneridge subdivision to the east is zoned R-1, Rural Residence, and lands to the west are zoned SR-1, Suburban Residence.

Courtesy notification letters were sent out to all property owners within 300 feet of the subject property prior to the October 12th meeting. As stated at that meeting no follow-up letters will be mailed while this project is under review by Planning Commission, however City staff has notified The Enclave Homeowners Association (HOA) of the proposal being on the agenda. Should this proposal move forward, the same property owners will be notified of a Public Hearing of City Council on the rezoning of the property.

This item was reviewed on a preliminary basis at the June 14th meeting at which time the Planning Commission authorized this item to be placed on a future agenda for final approval.

Staff Recommendation

City staff is recommending approval of the final development plan for the Clearview Crossing PUD-R residential subdivision contingent on the following:

1. Provide housing plans for incorporation into the final development plan approval. All homes to be consistent with Section 1264.06, Development Standards for Specific Uses, Single-Family Dwellings (Detached) for compliance of some of the home plans with (b) Appearance, and (c) Garages with respect to 60% maximum width and side/rear access.
2. Coordinate with City staff on provided landscaping plan adjusted to Chapter 1280 standards. Landscaping for frontage revised to 1 tree per 40 foot of frontage, not 1 tree per 20 feet, interior street tree calculations appear to be correct, buffers to south and west are at rate of 1 tree per 20 feet, and site landscaping is in addition to other landscaping, not part of the interior street, exterior street, and buffer requirements. This may be accounted for as landscaping on individual home sites. Also, while it appears no existing trees are to be retained, note that existing landscaping 4 inches DBH may be credited against Chapter 1280 requirements.
3. For the fence proposed along the 10-foot pathway, provide a minimum two-foot buffer from the edge of pavement. The same standard applies to landscaping and other obstructions.
4. Expand vehicle pull-off area near centralized mailbox location to improve functionality.
5. Development signage, if proposed, to be reviewed by Zoning Inspector for compliance with Sign Code and sight distance requirements. Same applies to construction and other temporary signage.
6. Provide graphic scale on all applicable streets.
7. Provide turnaround along bike path at the west side of water vault adjacent to SR 73.
8. Clear the vegetation along the west side of the property within the existing 30 foot sanitary sewer easement.
9. Remove construction drawings from final development plan submittal. The construction drawings will be reviewed and approved by engineering staff.
10. Clearcreek Fire District does not have comments at this time.

D. Preliminary Review
Final Development Plan, Village Park PUD-MU, Planned Unit Development-Mixed Use, office component, Southwest of Intersection of Gardner Road and Village Park Drive, proposed fire station

Background Information

This agenda item is a preliminary review of a final development plan for the development of Clearcreek Fire District No. 24 on Gardner Road between Village Park Drive and Anna Drive in the office component of the Village Park PUD-MU, Planned Unit Development-Mixed Use. The final development plan, submitted by KZF Design, Cincinnati, would allow for the construction of a four-bay drive-through bay for apparatus, fire district administrative offices, living areas for Station No. 24, and training areas. The 4.0635-acre site will also include in the long-term space for use by the City of Springboro Public Works Department to be constructed at a later date.

The proposed site is vacant and is located in the office component of the Village Park PUD-MU. The use is permitted in this location as an essential service. Direct access for the apparatus bays will be to Gardner Road. Secondary access will be provided by private access drives shared with other properties to the north and south of the fire station.

All lands in the vicinity are within the Village Park PUD-MU, Planned Unit Development-Mixed Use, that was approved in September 2004. Immediately to the north of the proposed fire station site is Wade Insurance, 775 Gardner Road, to the south are two platted vacant office sites and Goddard School, 705 Gardner Road, and to the west is the City of Springboro's Gardner Park in the open space component of the PUD. To the east is the retail component of the PUD including Springboro Wine & Spirits, 748 Gardner Road, the vacant parcel that brought about tonight's Public Hearing, and Farmers & Merchants Bank/Biggby's Coffee, 720 Gardner Road. Zoning for all lands in the vicinity is controlled by the Village Park PUD-MU.

Staff Comments

City staff has the following comments regarding this agenda item:

1. Following preliminary review of final development plan, provide exterior lighting plan consistent with Chapter 1273, Exterior Lighting, of Planning and Zoning Code, and Village Park PUD-MU design standards.
2. Following preliminary review of final development plan, provide landscaping plan consistent with Chapter 1280, Landscaping, of Planning and Zoning Code, and Village Park PUD-MU design standards.
3. While not part of final development plan review process, signage to be reviewed by Zoning Inspector for compliance with Sign Code and Village Park PUD-MU design standards. Same applies to construction and other temporary signage.
4. Verify the existing location of the 8" water main, and relocate all sections to be (at a minimum) 10 feet away from the proposed building and patio/exterior recreation space.
5. Provide removal details of the existing fire hydrant at the rear entrance.
6. Relocate storm run from CB 6 to CB 5 to be 10 feet away from building.
7. Provide record plan replatting the lot lines and establishing/vacating any necessary easements.

8. Remove and replace curb along Gardner road curb cut to be depressed ODOT Type 2 curb and gutter.
9. Water laterals to be min 1" K copper with meter and mtu inside building. Sewer laterals to be min 6" SDR 35 with 2% slope.
10. Additional engineering comments are reserved until such time when designed improvements are completed on construction drawings, including but not limited to: easements, water, sanitary, and storm sewer.
11. Clearcreek Fire District does not have comments at this time.

E. Preliminary Review, Rezoning, R-1, Estate-Type Residential District, to PUD-R, Planned Unit Development-Residential, 1525 South Main Street (SR 741), proposed single-family residential subdivision

F. Preliminary Review, General Plan, R-1, Estate-Type Residential District, to PUD-R, Planned Unit Development-Residential, 1525 South Main Street (SR 741), proposed single-family residential subdivision

Background Information

These agenda items are based on a request filed by MI Homes of Cincinnati, LLC, seeking rezoning and general plan approval for the proposed Whispering Pines subdivision, a residential subdivision on an approximately 35.62-acre site located at 1525 South Main Street (SR 73). The applicant is requesting rezoning and general plan approval under the City's Planned Unit Development (PUD) process from R-1, Estate-Type Residential District, to PUD-R, Planned Unit Development-Residential.

The applicant proposes to develop a total of 95 single-family residential units on the site. The proposed development density is 2.67 units per acre with typical lots proposed to be 8,370 square feet and an average of 9,000 square feet. Current zoning permits two units per acre on lots no less than 20,000 square foot lots. Two access points are proposed for the subdivision, both from the frontage on South Main Street, one at the midpoint of the property frontage, and a second on the northeast corner aligned with the intersection of Heatherwoode Boulevard. A stub street is also proposed for the west end of the site. That stub street would project into lands in Clearcreek Township. A total of 10.6 acres of open space is shown, or 30% of the property area. Residential PUDs require a minimum 25% open space.

The proposed rezoning/general plan appears as two separate items on the Planning Commission work session agenda. Rezoning together with general plan review and approval are the first step in the three-step PUD review and approval process. Approval by both Planning Commission and City Council are required. Final development plan, similar to the City's site plan review process, review and approval by Planning Commission is the second stage in the process. Final development plan may be submitted in a number of sections in conjunction with a site's incremental development. Record plan review and approval by both Planning Commission and City Council is the last step in the PUD approval process. This allows for the subdivision of lots and the dedication of right-of-way and open spaces. As with final development plans, record plans may be submitted in a number of sections as the development is completed.

The subject property is presently zoned R-1, Estate-Type Residential District. That classification dates to 2015 when large parts of Springboro were reclassified to R-1 District from Township or

(T)R-1 District. The (T)R-1 designation was allowed to remain on properties annexed over time from lands originally in Clearcreek and Franklin Townships. The R-1 and (T)R-1 have similar development densities, however moving to R-1 District allows the City to manage its own long-range development though its own Planning and Zoning Code.

Adjacent land uses in Springboro include large lot residential to the west in Clearcreek Township, and to the north in the City. To the east, on the east side of South Main Street, cluster housing on Glencoe Court, Dunnington Court within the Heatherwoode PUD, and large lot residential, and to the south the Springboro Community Schools Junior High School and athletic facilities.

Adjacent zoning in the Springboro portion of the vicinity is R-1 District to the north and southeast, PUD to the east encompassing the Heatherwoode PUD, and PUD to the south incorporating the Junior High School and other school property to the south. Lands to the west in Clearcreek Township are zoned SR-1, Suburban Residence, which allows development up to two units per acre when connected to a centralized sewage system.

The *Springboro Master Plan*, adopted by City Council in February 2022, includes recommendations for the long-range development of the community. It is divided into 16 policy areas that make specific recommendations for smaller portions of the community and are grouped together because of proximity, land use patterns, date of development and other general characteristics. Policy Area 16, Heatherwoode, includes the subject area and land including the Heatherwoode, Farms of Heatherwoode, and Ashton Woods subdivisions, the City's Heatherwoode Golf Course, and the Springboro Community Schools main campus. The policy area recommends residential development and redevelopment that conforms to the existing character of adjoining neighborhoods. The plan also recommends connecting neighborhoods in the area, and improving pedestrian and bicycle access.

The three residential subdivisions in the vicinity were developed at the following densities:

- Ashton Woods, 21 units on 10.62 acres, 1.98 units/acre
- Farms of Heatherwoode, 162 units on 80.79 acres, 1.78 units/acre
- Heatherwoode, 221 units on 105.71 acres, 2.08 units/acre. This includes Glencoe Court and Dunnington Court. The golf course is not included in the density calculation.

Aside from school property, lands immediately abutting the property are 11.23 acres (west), and 16.65 acres (north) in area.

Courtesy notification letters were sent out to all property owners within 300 feet of the subject property prior to the July 12th meeting. Should this proposal move forward, the same property owners will be notified of a Public Hearing of City Council on the rezoning of the property.

Staff Comments

City staff has the following comments on the general plan and rezoning for 1525 South Main Street:

1. What is warranting a departure from the development density of the surrounding area as recommended in Master Plan Policy Area 16 (2.67 dwelling units proposed, three nearby subdivisions developed at 1.72 to 2.10 units/acre)?
2. Home plans to comply with Section 1264.06, Design Standards for Single-Family Detached Dwellings, of Planning and Zoning Code.

3. Indicate proposed exterior building materials for the subdivision.
4. Provide minimum lot sizes for all proposed lots.
5. Indicate percentage of open space that is set aside for storm water detention, that is buffering to adjacent development, and set aside for amenities within the subdivisions.
6. Reorganize the proposed open space plan so that it provides future residents with more quality open space this is contiguous and usable, then drains the property, then buffers neighboring development in that preference order.
7. Incorporate the circa 1832 Janney House into the common area of the subdivision, the home of a conductor on the Underground Railroad, and later home to a resident that was instrumental in the restoration of the Null Log Home.
8. Plan to incorporate an east-west multiuse trail into the design of the subdivision to connect Heatherwoode on the east with land fronting Weidner Road to the west.
9. Provide an access point to the open space between lots 62 and 63.
10. Proposed name of development to be changed. Whispering Pines is an existing street.
11. Streets to be built to City specifications, including 29 feet back to back of curb with 5 feet sidewalks. Back of sidewalk to be along the right of way line.
12. An HOA shall be developed to maintain all common elements, including but not limited to: detention facilities, sump drains, identification signage, central mailbox unit(s) and open space.
13. Provide location of Central Mailbox Unit(s), which are to be reviewed by the Post Master.
14. Engineering comments are reserved until such time when designed improvements are completed on construction drawings, including but not limited to: water, sanitary, storm sewer and detention basin design.
15. Traffic study is currently being reviewed.
16. Dedicate the right of way along South Main Street (SR 741) and make any necessary roadway improvements, including but not limited to roadway widening (if needed), pavement markings and signage.
17. Consider implementing traffic calming controls on Glasgow and Morris Streets.
18. Clearcreek Fire District does not have comments at this time.

The information contained in this report is based on material provided to the City of Springboro as of Friday, July 7, 2023 at 12:00 p.m.

APPLICATION—PLANNED UNIT DEVELOPMENTS
CITY OF SPRINGBORO PLANNING COMMISSION

☒ REZONING/GENERAL PLAN ☐ FINAL DEVELOPMENT PLAN ☐ RECORD PLAN ☐ VARIANCE
Major Revision

The undersigned requests the approval identified above. Approvals subject to expiration provided for in Chapter 1266 of Planning & Zoning Code. For all approvals under this application, it is understood that it shall only authorize the approval described in this application, subject to any conditions or safeguards required by the Planning Commission, and/or City Council.

❑ Owner
☒ Agent
❑ Lessee
❑ Signed Purchase Contract

APPLICANT NAME: Christopher A. Hinkel, President Dryden Builders, Inc.

Address: 1741 Thomas Paine Parkway

Centerville, Ohio 45459

Telephone No. (937) 439-2728

Fax No. (937) 937-439-2729

Email Address: chris@drydenbuilders.com

PROPERTY OWNER NAME (IF OTHER): Sahana Properties, LLC

Address: 748 Gardner Road

Springboro, Ohio 45066

Telephone No. (937) 680-1600

Property Address or General Location: Lot next to Springboro Wine & Spirits, 748 Gardner Road

Parcel Number(s): 04154000400 Acreage: 1.0951

PUD Category: ☐ Residential ☐ Retail ☐ Office ☐ Manufacturing ☑ Mixed Use

If Mixed Use, Acreage in Each Category: Retail, Restaurant, Office

For Residential Proposed Density N/A Number of Residential Units N/A

Proposed Use: Construct two single story buildings for commercial use, total 8,982 SF

The applicant or representative who is authorized to speak on behalf of the request must also be present at all meetings.

(Signature of Applicant and/or Agent) 6-14-2023 (Date)

Christopher A. Hinkel, President
Dryden Builders, Inc.
Printed Name

Excerpt of Village Park PUD-MU, retail component, design and development standards.

(b) Certain Facilities and Practices Prohibited. Unless specifically permitted above, drive-in or drive-through facilities are not permitted in the B-2 District due to their stacking requirements and traffic generation potential, even though associated with a use otherwise permitted. Unless specifically permitted above, outdoor storage of goods or business equipment is not permitted. (Ord. 00-15. Passed 2-17-00.)

Permitted uses	Convenience, personal service-type business, personal services offices, public and quasipublic uses
Minimum lot sizes	7,500 square feet
Minimum lot width	65 feet
Minimum front yard	35 feet
Minimum rear yard	5 feet
Minimum side yard width	5 feet
Maximum residential density	N/A
Minimum number of off-street parking spaces	See Section 1270.07
Maximum building height in feet/stories	40 feet/N/A
Minimum dwelling unit floor space	N/A
Minimum off-street loading space	See Section 1270.15
Maximum accessory building height	40 feet
Minimum accessory building setback to side, rear property line	5 feet

NOT FOR CONSTRUCTION

PRELIMINARY DRAWINGS

JAMES C. HAWTHORN ASSOCIATES
ARCHITECTS
1900 Kress Wood Circle
Dayton, Ohio 45429
P: 937.298.3607 jim@jcharc.com

DRYDEN BUILDERS
1741 Thomas Paine Parkway
Dayton, Ohio 45459
Office (937) 439-2728 chris@drydenbuilders.com

PROPOSED
RETAIL BUILDING:
GARDNER ROAD
SPRINGBORO, OHIO 45066

© 2023 James C. Hawthorn, Registered Architect ALL RIGHTS RESERVED. This drawing represents the original and unpublished work of the Architect. Any duplication or other use of these drawings without the express written consent of the Architect is forbidden.

STATE OF OHIO
JAMES C. HAWTHORN 7946
REGISTERED ARCHITECT
James C. Hawthorn, Registered Architect #7946
Expiration Date: 12/31/23

REVISIONS

NO.	DATE	DESCRIPTION

DATE
5.25.23

JOB. NO.
23.008

TITLE

SHEET NO.
T1.0

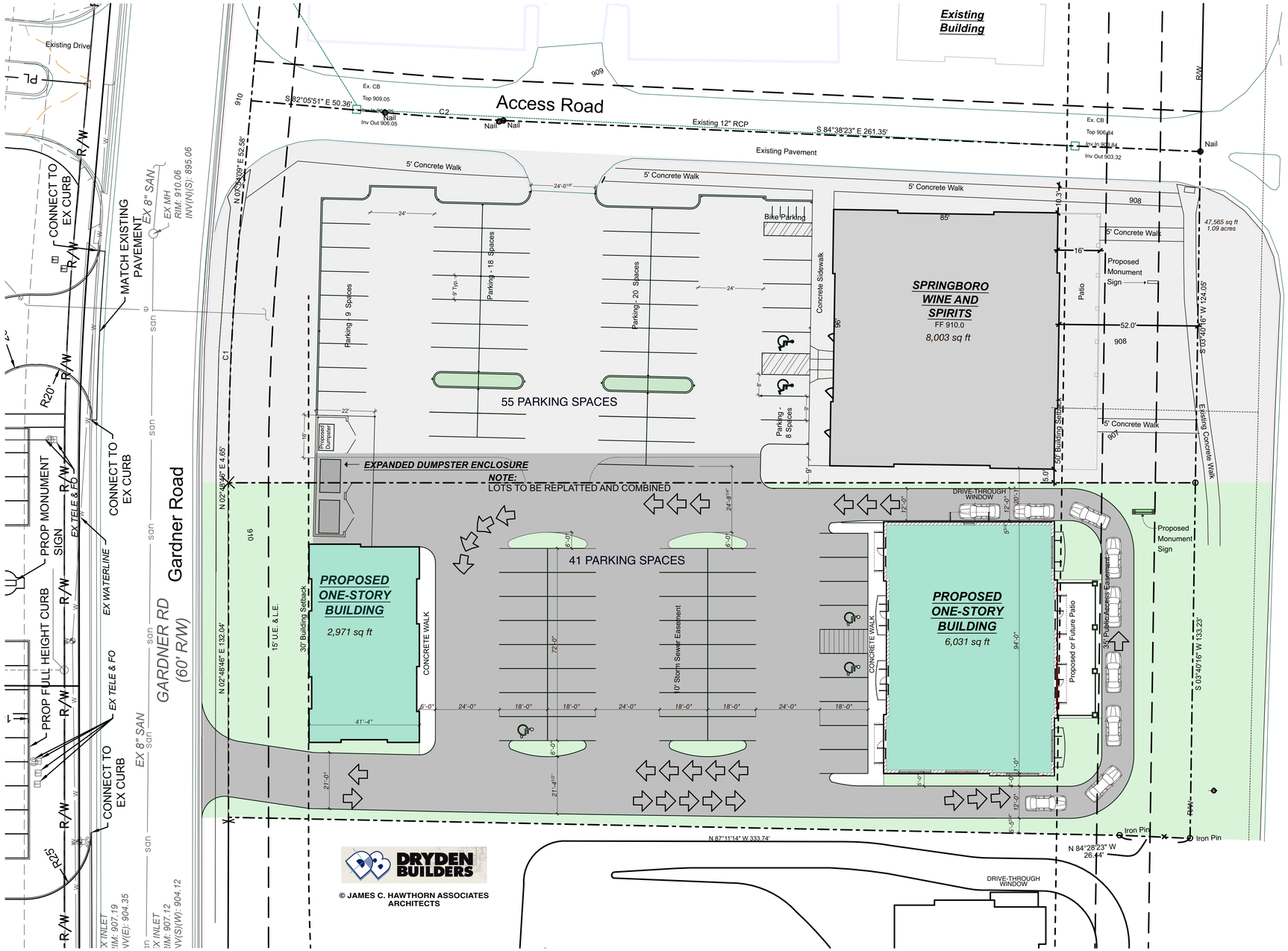

© JAMES C. HAWTHORN ASSOCIATES ARCHITECTS

SPRINGBORO WINE & SPIRITS
MAXIMUM BUILDING AREA

NON-SPRINKLERED, TYPE II-B

A-2 ASSEMBLY (RESTAURANTS, BARS, ETC.) - MAXIMUM 9,500 S.F.
- -OPEN AREA INCREASE WITH 30' CLEAR - 9,500 + (9,500 X .75) = 16,625 S.F.
- -OVER 5,000 S.F. REQUIRES FIRE BARRIER
- -OVER 100 OCCUPANTS REQUIRES FIRE BARRIER

A-3 ASSEMBLY (COMMUNITY HALLS, GYMNASIUMS, ART GALLERIES, RELIGIOUS, ETC.) - MAXIMUM 9,500 S.F.
- -OVER 12,000 S.F. REQUIRES FIRE BARRIER
- -OVER 300 OCCUPANTS REQUIRES FIRE BARRIER
- -OPEN AREA INCREASE WITH 30' CLEAR - 9,500 + (9,500 X .75) = 16,625 S.F.

BUSINESS (PROFESSIONAL OFFICES, ETC.)- 23,000 S.F.
- -OPEN AREA INCREASE WITH 30' CLEAR - 23,000 + (23,000 X .75) = 40,250 S.F.

MERCANTILE (RETAIL) - 12,500 S.F.
- -OVER 12,000 S.F. REQUIRES FIRE BARRIER (MAXIMUM 8,000 FOR UPHOLSTERED FURNITURE)
- -OPEN AREA INCREASE WITH 30' CLEAR - 12,500 + (12,500 X .75) = 21,875 S.F.

NOTE THAT CORRIDORS IN ANY NON-SPRINKLERED OCCUPANCY WITH OVER 30 OCCUPANTS MAY REQUIRE FIRE RATED CORRIDORS

SITE PLAN

0 10' 20' 40'

N

NOTE:
THIS SITE PLAN IS INTENDED FOR PRELIMINARY PLANNING PURPOSES ONLY AND IS BASED ON INFORMATION PROVIDED BY THE CLIENT. VERIFY PROPERTY LINES, SETBACKS AND EASEMENTS PRIOR TO CONSTRUCTION. GRADING AND RETAINING WALL AS SHOWN ARE APPROXIMATE AND MUST BE VERIFIED. THE ARCHITECT IS NOT RESPONSIBLE FOR THE ACCURACY OF THE INFORMATION ON THIS PLAN.

PRELIMINARY DRAWINGS NOT FOR CONSTRUCTION

PROPOSED RETAIL BUILDING:
GARDNER ROAD
SPRINGBORO, OHIO 45066

DRYDEN BUILDERS
1741 Thomas Paine Parkway
Dayton, Ohio 45459
Office (937) 439-2728 chris@drydenbuilders.com

JAMES C. HAWTHORN ASSOCIATES
ARCHITECTS
1900 Kress Wood Circle
Dayton, Ohio 45429
P: 937.298.3607 jim@jchparc.com

© 2023 James C. Hawthorn. Registered Architect ALL RIGHTS RESERVED. This drawing represents the original and unpublished work of the Architect. Any duplication or other use of these drawings without the express written consent of the Architect is forbidden.

STATE OF OHIO
JAMES C. HAWTHORN
7946
REGISTERED ARCHITECT
James C. Hawthorn Registered Architect #7946
Expiration Date: 12/31/23

REVISIONS

NO.	DESCRIPTION	DATE

DATE 5.25.23

JOB. NO. **23.008**

TITLE **TITLE SHEET**

SHEET NO. **A1.0**

APPLICATION—SITE PLANS, SUBDIVISIONS & RECORD PLANS
CITY OF SPRINGBORO PLANNING COMMISSION

☑ SITE PLAN ☐ REVISION TO APPROVED SITE PLAN ☐ CONCEPT PLAN ☐ PRELIMINARY SUBDIVISION ☐ RECORD PLAN

The undersigned requests the approval identified above. Site Plan Review approvals subject to expiration provided for in Section 1284.18 of the Planning and Zoning Code. For all approvals under this application, it is understood that it shall only authorize the approval described in this application, subject to any conditions or safeguards required by the Planning Commission, and/or City Council.

☐ Owner
☑ Agent
☐ Lessee
☐ Signed Purchase Contract

APPLICANT NAME: Ferguson Construction (Brandon Rose)

Address: 400 Canal St. [redacted]
Sidney, OH 45365

Telephone No. (937) 498-2381

Fax No. (937) 498-2243

Email Address brose@ferguson-construction.com

PROPERTY OWNER NAME (IF OTHER): Innomark Real Estate, LLC

Address: 3233 South Tech Boulevard
Miamisburg, Ohio 45342

Telephone No. (937) 425-6100

Property Address or General Location: 3233 S. Tech Blvd., Miamisburg, OH 45342

Parcel Number(s): K45100117 0001 Zoning District: ADD-1

Proposed Use: A new 96,480 Sq. Ft. facility for offices, manufacturing, and warehouse space for Innomark Communications. Includes 101 new parking spaces and six truck docks.

The applicant or representative who is authorized to speak on behalf of the request must also be present at all meetings.

Brandon Rose
(Signature of Applicant and/or Agent)

[redacted]
(Date) 6/23/23

Brandon Rose
Printed Name

6/23/2023

To Whom it May Concern,

1) Provide building population at maximum shift for determination of off-street parking requirement.

See sheet C-1.3 for the added site conditions. Noting a maximum shift of 65 employees.

2) Provide lot coverage percentage for subject property.

See sheet C-1.3 for the added site conditions. Noting a maximum lot coverage, the new east lot will have a 62.765% lot coverage and the new west lot will have 73.385% lot coverage.

3) For final approval of site plan, revise exterior lighting plan in compliance with Chapter 1273, Exterior Lighting, of Planning and Zoning Code, to improve legibility of data points on sheet 2 of 2, provide light fixtures specification sheet, confirm all color-temperature is 3500° or less, provide maximum to minimum (10:1) and average to minimum (4:1) ratios, and note that foot-candles may be no higher than 6.0.

Please see the additional Site Lighting PDFs with the required information.

4) For final approval of site plan, coordinate with staff on landscaping consistent with ADD-1 requirements.

Please see the provided landscaping plan provided by Ferguson Construction. Final landscaping is to be completed by the owner.

5) Signage plan for building/site subject to review by Zoning Inspector for compliance with Sign Code, Chapter 1281, of Planning and Zoning Code outside of the site plan review process.

No signage is planned at this time. We will submit for signage at a later time by a separate permit once signage for the property has been chosen.

6) The curb cut along South Tech Boulevard shall have the existing curb and gutter removed and replace with ODOT Type 2 depressed curb and gutter, with minimum 7” concrete drive apron.

See sheet C-1.1 showing the existing curb and gutter to be removed and replaced with ODOT Type 2 depressed curb and gutter, with a minimum 7" concrete drive apron.

7) Provide Storm water pollution prevention plan.

Please see sheet SWPPP and the provided SWPPP manual with the listed BMPs.

8) Provide graphic scale on all applicable sheets.

A graphic scale is now shown on all applicable sheets.

9) Easements to match record plan.

Easements have been modified to match the record plan.

10) Montgomery County to review water and sewer design.

Drawings will be submitted to Montgomery County to review the water and sewer designs.

11) Concrete storm sewer required in the right of way.

Concrete storm sewer is now shown for the sewer within the right-of-way. See sheet C-1.1.

12) We will require the purchase and installation of a Knox Box to be installed and located at the front entrance of the facility.

A Knox Box is now noted to be installed near the front entry of the facility.

13) Fire Department Connections (FDC) for all sprinkled buildings shall be with-in 75 feet of a fire hydrant on the public water system. All fire department connections must have a 5" Stortz connection with a 30 degree downturn and includes a cap attached by a cable.

This note has been added to sheet C-1.3.

14) A fire extinguisher plan must be submitted to the Fire District. Placement and installation must be completed prior to final building replacement.

This plan will be submitted to the Fire District upon architectural drawings being submitted to the building department.

15) Building requires a minimum 4" contrasting address numbers near main entrance. Must be visible from the road.

This note has been added to sheet C-1.1.

16) A scaled floor plan is required at or before of final building inspection showing occupant load, location of exits, electrical and gas shut offs, fire department connections and other applicable information as may be useful in conducting pre-incident preparation by Fire District. The acceptable size of this plan is 8.5 inches by 11 inches.

The scaled floor plan will be submitted at the time of submitting plans to the building department. These plans will show occupant loads, location of exits, and electrical and gas shut-offs. The fire department connection is shown on sheet C-1.1 as a remote FDC.

17) All testing of all systems shall be scheduled through the Springboro Building Department at (937) 748-9791. All test shall be scheduled 48 hours in advance of testing. The Fire Marshal or Fire District representative will witness all testing.

This note has been added to sheet C-1.3.

Thank you,
Brandon

Brandon Rose | Civil Designer

NEW FACILITY FOR
INNOMARK

MONTGOMERY COUNTY
SOUTH TECH BLVD.
SPRINGBORO, OHIO 45342

INDEX OF DRAWINGS		
SHT. NO.	DATE	DESCRIPTION
COVER	5/19/23	INDEX & NOTES
C - 1.1	5/19/23	SITE PLAN
C - 1.2	5/19/23	SITE NOTES AND DETAILS
A - 1.0	5/19/23	OVERALL FLOOR PLAN
A - 1.1	5/19/23	ENLARGED FLOOR PLANS
A - 2.1	5/19/23	ROOF PLAN
A - 3.1	5/19/23	ELEVATIONS
A - 4.1	5/19/23	WALL SECTIONS
A - 4.2	5/19/23	WALL SECTIONS
A - 4.3	5/19/23	WALL SECTIONS
A - 4.4	5/19/23	WINDOW SECTIONS
A - 5.1	5/19/23	DOOR SCHEDULE
A - 5.2	5/19/23	ROOM FINISH SCHEDULE
A - 5.3	5/19/23	CABINET ELEVATIONS
A - 6.1	5/19/23	ADA DETAILS
A - 11.1	5/19/23	ROOF FRAMING PLAN

INDEX OF DRAWINGS		
SHT. NO.	DATE	DESCRIPTION

ELECTRICAL NOTES

OFFICE AREAS TO RECEIVE 50 FOOT CANDLES OF 2' x 4' RECESSED LED LIGHTING. LIGHTING IN CONFERENCE ROOMS TO HAVE DIMMER SWITCH. PROVIDE SPECIALTY PENDANTS OR OTHER FEATURE LIGHTING IN LOBBY AND LARGE CONFERENCE ROOM.

PRODUCTION AREA TO RECEIVE 50 FOOT CANDLES AT 36" AFF OF SUSPENDED 2 x 4 LED HIGH BAY FIXTURES. (NO MOTION SENSING CONTROLS.)

PROVIDE EXIT AND EMERGENCY LIGHTS AS REQUIRED.

SEE DOOR SCHEDULE FOR HOOK-UP OF ELECTRIC DOOR OPERATORS.

PROVIDE WALL PACK EXTERIOR SECURITY LIGHTING AND LIGHT POLES W/ PHOTOCELL AND TIMERS AS REQUIRED.

PROVIDE HOOK-UP OF ALL HVAC EQUIPMENT. VERIFY REQUIREMENTS W/ HVAC SUBCONTRACTOR.

INSTALL ALL SWITCHES, RECEPTACLES, PHONE OUTLETS, DATA OUTLETS, ETC., FOR A COMPLETE INSTALLATION. PROVIDE POWER TO MICROWAVES, REFRIGERATORS, COFFEE, DISPOSAL, VENDING AND VIDEO EQUIPMENT. INCLUDE ONE GFI OUTLET IN EACH RESTROOM.

PROVIDE POWER TO ONE INTERNALLY LIT EXTERIOR SIGN TO BE LOCATED NEAR THE ROAD. SIGN FURNISHED AND INSTALLED BY OWNER.

INSTALL RECEPTACLES ON WALLS AT 40' O/C AROUND PERIMETER OF PRODUCTION AREA AND ON ALL COLUMNS.

PHONE WIRING AND COMPUTER WIRING TO BE FURNISHED AND INSTALLED BY OWNER.

ELECTRICAL SERVICE TO BE 480 VOLT 3 PHASE WITH CAPACITY FOR FUTURE EXPANSION.

PROVIDE POWER TO OWNERS PRODUCTION EQUIPMENT. SEE OWNER EQUIPMENT INFORMATION.

WHERE FORKLIFTS OPERATE NEAR ELECTRICAL PANELS, PROVIDE HIGHWAY TYPE GUARDRAIL W/ FLARED ENDS MOUNTED ON W6X9 WIDEFLANGE POSTS W/ 1/2" TK. X 10" X 10" BASE PLATE ANCHORED TO CONCRETE FLOOR W/ (4) 3/4" DIA. EXPANSION ANCHORS. TOP OF GUARDRAIL TO BE 2'-6" A.F.F. GUARDRAIL TO BE FURNISHED AND INSTALLED BY GENERAL CONTRACTOR. ELECTRICAL SUBCONTRACTOR TO COORDINATE W/ G.C. EXACT LOCATIONS.

PROVIDE FLOOR BOXES AT OPEN OFFICE AREAS AND CONFERENCE ROOMS AS REQUIRED.

GENERAL REQUIREMENTS FOR TELEPHONE SERVICE TO THE BUILDING SUCH AS UNDERGROUND CONDUIT FROM THE ROAD RIGHT OF WAY TO THE TELEPHONE EQUIPMENT ROOM, PLYWOOD BACKBOARD, DEDICATED OUTLET, GROUND CONNECTION, ETC., TO BE INCLUDED BY ELECTRICAL SUBCONTRACTOR. VERIFY EXACT REQUIREMENTS W/ LOCAL TELEPHONE COMPANY. ALL COMMUNICATION WIRING TO BE BY OTHERS.

PROVIDE PROPER CLEARANCES BETWEEN PAD MOUNTED TRANSFORMERS AND BUILDING WALLS. FIRE WALLS OR BARRIER WALLS ARE NOT TO BE USED UNLESS APPROVED BY THE OWNER.

PROVIDE METAL BUILDING GROUNDING AS REQUIRED.

ALL GROUNDING ELECTRODES PER N.E.C. 250.52 - METAL UNDERGROUND WATER PIPE, METAL FRAME OF THE BUILDING OR STRUCTURE, CONCRETE ENCASED ELECTRODE, GROUND RING, ROD AND PIPE ELECTRODES, AND / OR PLATE ELECTRODES THAT ARE PRESENT AT EACH BUILDING OR STRUCTURE SERVED SHALL BE BONDED TOGETHER TO FORM THE GROUNDING ELECTRODE SYSTEM. WHERE NONE OF THESE GROUNDING ELECTRODES EXIST, ONE OR MORE OF THE GROUNDING ELECTRODES SPECIFIED IN N.E.C. 250.52 (A) (4) THROUGH (A) (7) SHALL BE INSTALLED AND USED.

REFERENCE PROVISIONS REQUIRED DURING THE CONSTRUCTION OF THE FOUNDATION TO ALLOW THE REINFORCING (CONCRETE ENCASED ELECTRODE) TO BE BONDED TO THE REMAINDER OF THE GROUNDING ELECTRODE SYSTEM.

THE ELECTRICAL SUBCONTRACTOR SHALL BE RESPONSIBLE FOR STAMPING AND SEALING ALL ELECTRICAL DRAWINGS REQUIRED FOR OBTAINING STATE PERMIT.

HVAC NOTES

OFFICE AREA TO BE HEATED AND COOLED W/ PACKAGED GAS / ELECTRIC DOWNFLOW ROOFTOP UNITS. COOLING SYSTEM TO MAINTAIN 72°F INSIDE TEMPERATURE WITH 95°F OUTSIDE TEMPERATURE. HEATING SYSTEM TO MAINTAIN 72°F INSIDE TEMPERATURE WITH 0°F OUTSIDE TEMPERATURE. PROVIDE FRESH AIR AS REQUIRED. IT ROOM TO HAVE INDEPENDENT A/C UNIT.

PRODUCTION AREA TO BE HEATED AND COOLED W/ PACKAGED GAS / ELECTRIC DOWNFLOW ROOFTOP UNITS. COOLING SYSTEM TO MAINTAIN 76°F INSIDE TEMPERATURE W/ 95°F OUTSIDE TEMPERATURE. HEATING SYSTEM TO MAINTAIN 68°F INSIDE TEMPERATURE W/ 0°F OUTSIDE TEMPERATURE. PROVIDE FRESH AIR AS REQUIRED AND HUMIDITY RANGE OF 45 - 65%. TAKE INTO ACCOUNT THAT THE PRINTING EQUIPMENT DOES GENERATE HEAT.

HVAC EQUIPMENT TO BE HIGH EFFICIENCY WITH ECONOMIZERS, 480 VOLT 3 PHASE. THERMOSTATS AND CONTROLS TO BE PROGRAMABLE.

PROVIDE SMOKE DETECTORS IN HVAC EQUIPMENT AS REQUIRED.

PROVIDE TOILET ROOM EXHAUST BY HVAC SUBCONTRACTOR. ELECTRIC HOOK-UP BY ELECTRICAL SUBCONTRACTOR.

THE MECHANICAL SUBCONTRACTOR SHALL BE RESPONSIBLE FOR STAMPING AND SEALING ALL MECHANICAL DRAWINGS REQUIRED FOR OBTAINING STATE PERMIT.

PLUMBING NOTES

WATER LINES INSIDE OF BLDG. TO BE TYPE "L" HARD COPPER.

WATER LINES OUTSIDE OF BLDG. TO BE TYPE "K" SOFT COPPER.

SANITARY PIPING TO BE PVC PLASTIC.

GAS LINES TO BE BLACK STEEL SCHEDULE 40.

INSULATE ALL ABOVE GROUND HOT AND COLD WATER LINES.

WATER CLOSETS TO BE FLOOR MOUNTED, FLUSH VALVE.

URINALS TO BE WALL HUNG, FLUSH VALVE.

LAVATORIES TO BE SET IN COUNTERTOPS.

ELECTRIC WATER COOLERS TO BE WALL HUNG, DUAL HEIGHT, HANDICAP TYPE.

MOP BASIN TO BE 24" X 24" FIBERGLASS, FLOOR MOUNTED.

FLOOR DRAINS TO BE 5" DIAMETER POLISHED BRASS.

HOT WATER HEATER BY PLUMBING SUBCONTRACTOR.

PROCESS PIPING AND/OR DRAINS FOR OWNERS EQUIPMENT NOT INCLUDED.

DOCK DRAINS BY SITE SUBCONTRACTOR.

ALL SINK FAUCETS ARE TO BE WRIST BLADE TYPE FOR HANDICAPPED USE.

INSTALL STAINLESS STEEL SINKS AT COUNTER AREAS WHERE SHOWN W/ WRIST BLADE LEVERS AND LARGE GOOSENECK FAUCETS.

WATER CLOSETS SHALL BE EQUIPPED WITH SEATS OF SMOOTH, NON-ABSORBANT MATERIAL OF THE HINGED, OPEN-FRONT TYPE PER O.P.C. 420.3.

THE PLUMBING SUBCONTRACTOR SHALL BE RESPONSIBLE FOR STAMPING AND SEALING ALL PLUMBING DRAWINGS REQUIRED FOR OBTAINING STATE PERMIT.

SPRINKLER NOTES

INSTALL A COMPLETE AUTOMATIC EARLY SUPPRESSION FAST RESPONSE (ESFR) SPRINKLER SYSTEM IN THE NEW BUILDING. PROVIDE A PUMP SYSTEM IF REQUIRED. PROVIDE RECESSED HEADS WITH WHITE CONCEALED COVER IN AREAS WITH FINISHED CEILINGS. RACKING HEIGHT WILL BE 20 FEET WITH PAPER PRODUCTS.

SPRINKLER LINES SHALL BE RUN CONCEALED IN ALL OFFICE AREAS AVOIDING INTERFERENCE WITH LIGHTS, DUCTS, PIPES, ETC. ALL OTHER PIPING TO BE RUN EXPOSED.

AUTOMATIC SPRINKLER COVERAGE SHALL BE PROVIDED UNDER OPEN SECTIONAL OVERHEAD DOORS OR OTHER OBSTRUCTIONS PER SECTIONS 5-5.5.2 AND 5-6.5 OF THE NFPA 13 LISTED IN OBC CHAPTER 35.

THE ENTIRE INSTALLATION SHALL BE MADE IN FULL ACCORDANCE WITH THE LATEST RULES AND REGULATIONS OF THE GOVERNING AUTHORITIES HAVING JURISDICTION IN THIS TERRITORY.

WHERE FORKLIFTS OPERATE NEAR SPRINKLER RISERS, PROVIDE HIGHWAY TYPE GUARDRAIL W/ FLARED ENDS MOUNTED ON W6X9 WIDEFLANGE POSTS W/ 1/2" TK. X 10" X 10" BASE PLATE ANCHORED TO CONCRETE FLOOR W/ (4) 3/4" DIA. EXPANSION ANCHORS. TOP OF GUARDRAIL TO BE 2'-6" A.F.F. GUARDRAIL TO BE FURNISHED AND INSTALLED BY GENERAL CONTRACTOR. SPRINKLER SUBCONTRACTOR TO COORDINATE W/ G.C. EXACT LOCATIONS.

THE SPRINKLER SUBCONTRACTOR SHALL BE RESPONSIBLE FOR STAMPING AND SEALING ALL SPRINKLER DRAWINGS REQUIRED FOR OBTAINING STATE PERMIT.





Revisions

#	Date	Description

Copyright © 2023 Ferguson Construction Company

The dissemination or duplication of this architectural and engineering drawing is prohibited without the prior written consent of Ferguson Construction Company.

PRELIMINARY

NEW FACILITY FOR **INNOMARK** MONTGOMERY COUNTY SOUTH TECH BLVD. SPRINGBORO, OHIO 45342

FERGUSON CONSTRUCTION
www.ferguson-construction.com

Sidney, Ohio
400 Canal Street
Sidney, OH 45365-0726
Phone: (937) 498-2381

Dayton, Ohio
825 South Ludlow Street
Dayton, OH 45402
Phone: (937) 274-1173

Columbus, Ohio
3595 Johnny Appleseed Ct
Columbus, OH 43231-4985
Phone: (614) 876-8496

Indianapolis, Indiana
7157 W. 200 N.
Greenfield, IN 46140
Phone: (317) 477-3615

Job Number	E-42028
Date	5/19/23
Drawn By	JTS
Checked By	JWM

INDEX & NOTES

COVER

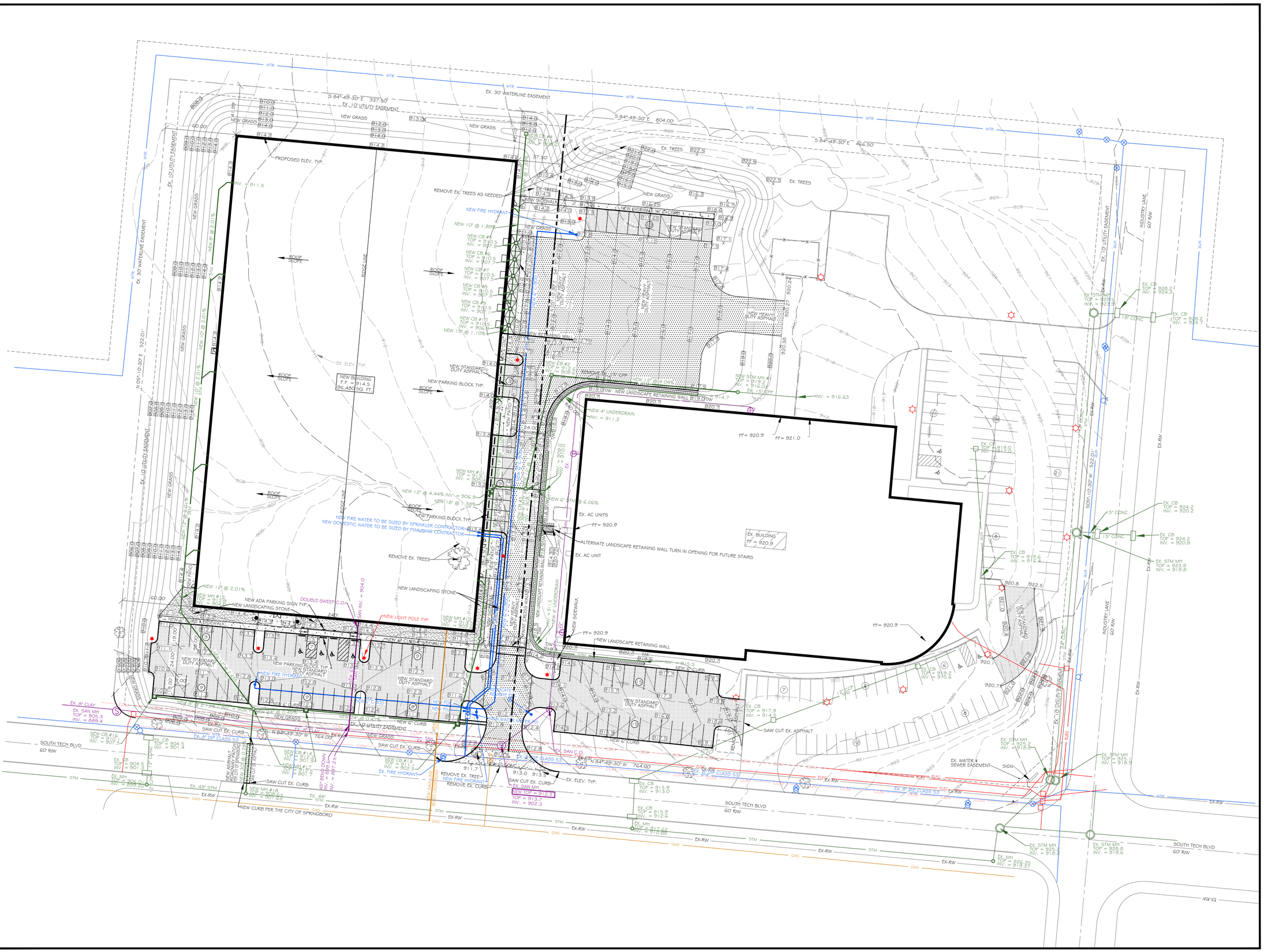
NEW BUILDING
F.F. = 914.5
96,480 SQ. FT.
NEW PARKING BLOCK TYP.
NEW LANDSCAPING STONE
NEW ADA PARKING SIGN TYP.
NEW LIGHT POLE TYP.
NEW FIRE HYDRANT
NEW 6" CURB TYP.
NEW SIDEWALK
NEW STANDARD DUTY ASPHALT
NEW HEAVY DUTY ASPHALT
NEW LANDSCAPE RETAINING WALL
NEW 4" UNDERDRAIN
NEW 6" STM @ 6.06%
NEW 12" @ 4.44%
NEW 18" @ 1.38%
NEW 12" @ 2.01%
NEW 10" @ 1.89%
NEW 15" @ 1.10%
NEW 10" @ 8.01%
NEW 10" @ 8.20%
NEW 6" @ 8.20%
NEW CB #5
NEW CB #6
NEW CB #7
NEW CB #8
NEW CB #9
NEW CB #10
NEW CB #11
NEW CB #12
NEW CB #13
NEW CB #14
NEW CB #15
NEW CB #16
NEW MH #9
NEW MH #10
NEW MH #11
NEW MH #12
NEW MH #13
NEW MH #14
NEW MH #15
NEW MH #16
NEW MH #17
NEW STM MH #1
NEW STM MH #2
NEW STM MH #3
NEW STM MH #4
NEW STM MH #5
NEW STM MH #6
NEW STM MH #7
NEW STM MH #8
NEW STM MH #9
NEW STM MH #10
NEW STM MH

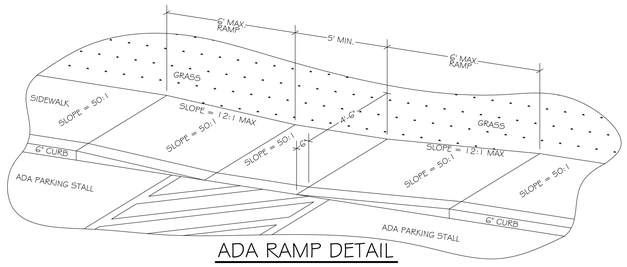

ADA RAMP DETAIL

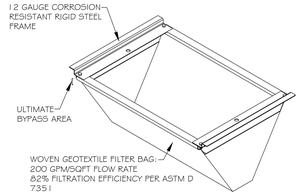

WOVEN GEOTEXTILE FILTER BAG:
200 GPM/SQFT FLOW RATE
82% FILTRATION EFFICIENCY PER ASTM D 7351

INSTALLATION INSTRUCTIONS:
1. REMOVE GRATE FROM THE DRAINAGE STRUCTURE
2. CLEAN STONE AND DIRT FROM LEDGE (LIP) OF DRAINAGE STRUCTURE
3. DROP THE FLEXSTORM INLET FILTER THROUGH THE CLEAR OPENING SUCH THAT THE HANGERS REST FIRMLY ON THE LIP OF THE STRUCTURE.
4. REPLACE THE GRATE AND CONFIRM IT IS NOT ELEVATED MORE THAN 1/8", THE THICKNESS OF THE STEEL HANGERS.

FLEXSTORM® INLET FILTERS
CATCH-IT® LITE

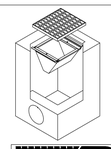

ADS
FLEXSTORM CATCH-IT LITE ASTM D8057

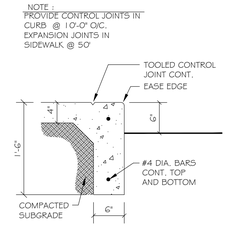

CONC. CURB AND WALK

N.T.S.

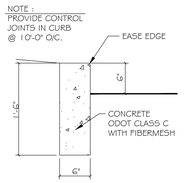

CONCRETE CURB

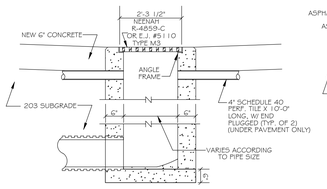

CATCH BASIN DETAIL

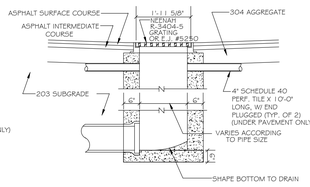

CATCH BASIN DETAIL

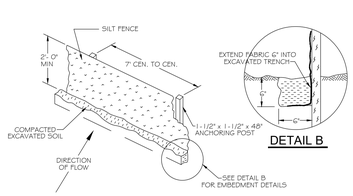

DETAIL B

SILT FENCE DETAIL

NOT TO SCALE

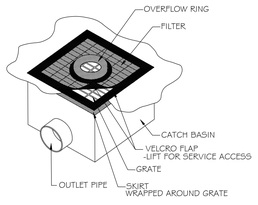

GRATE GATOR TYPE 'A'

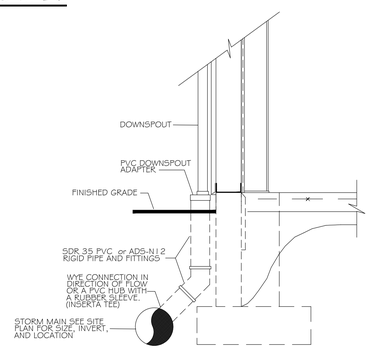

DOWNSPOUT DETAIL

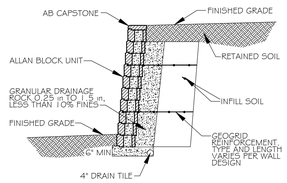

RETAINING WALL SECTION

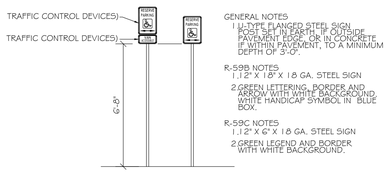

GENERAL NOTES
1. U-TYPE FLANGED STEEL SIGN POST SET IN EARTH, IF OUTSIDE PAVEMENT EDGE, OR IN CONCRETE IF WITHIN PAVEMENT, TO A MINIMUM DEPTH OF 3'-0".

R-59B NOTES
1. 12" X 18" X 18 GA. STEEL SIGN
2. GREEN LETTERING, BORDER AND ARROW WITH WHITE BACKGROUND. WHITE HANDICAP SYMBOL IN BLUE BOX.

R-59C NOTES
1. 12" X 6" X 18 GA. STEEL SIGN
2. GREEN LEGEND AND BORDER WITH WHITE BACKGROUND.

ACCESSIBLE PARKING SIGN DETAIL

N.T.S.

NOTE:
ONE PARKING SPACE MINIMUM SHALL BE DESIGNATED AS "VAN ACCESSIBLE". LOCATION AS NOTED ON THE DRAWINGS.
ONE SIGN TO BE INSTALLED AT EACH ACCESSIBLE PARKING SPACE

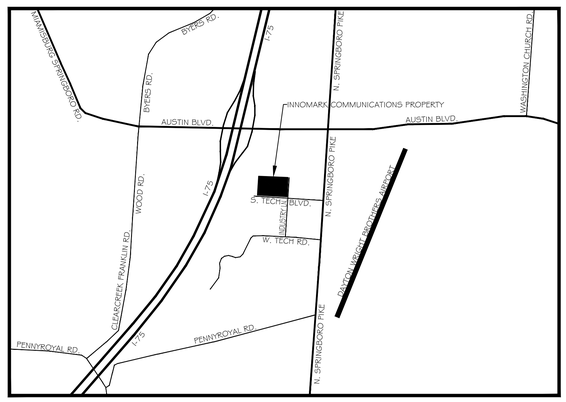

VICINITY MAP

N.T.S.

CENTER OF PROJECT

LATITUDE: 39°-35'-33.4" N LONGITUDE: 84°-14'-7.1" W

GENERAL NOTES

EROSION CONTROL

SITE CONTRACTOR SHALL TAKE APPROPRIATE MEASURES TO CONTROL SOIL EROSION AND SEDIMENTATION THROUGHOUT THE PROJECT. THIS SHALL INCLUDE THE USE OF STRAW BALES, SILT FENCING, #2 STONE AT CONSTRUCTION ENTRANCES AND ANY OTHER METHODS TO PREVENT EROSION OR SEDIMENT FROM LEAVING THE CONSTRUCTION SITE. ANY DIRT OR DEBRIS TRACKED ONTO THE ROADWAY SHALL BE REMOVED WITHIN 24 HOURS OR LESS.

NO GRADING OPERATIONS SHALL BEGIN UNTIL THE CITY APPROVES THE EROSION CONTROL PLAN AND AN EPA NPDES PERMIT IS OBTAINED. THE SITE CONTRACTOR MUST IMPLEMENT, INSPECT & MAINTAIN EROSION CONTROL MEASURES UNTIL AREA IS STABILIZED.

SITE PREPARATION AND GRADING

STRIP TOPSOIL FROM BUILDING AND PAVEMENT AREAS, STOCK PILE AND RESPREAD. AFTER THE COMPLETION OF STRIPPING OPERATIONS, THE EXPOSED SUBGRADE AREAS SHALL BE PROOFROLLED WITH SUITABLE HEAVY EQUIPMENT (20-30 TON LOADED DUMP TRUCK). GRADE AND MAKE REQUIRED CUTS AND COMPACTED FILLS FOR NEW ELEVATIONS SHOWN. HAUL IN ENGINEERED FILL AS NEEDED AND HAUL OFF EXCESS MATERIAL OFF-SITE.

THE CONTRACT MUST BE ADJUSTED FOR ANY COST INCURRED IN MOVING, REROUTING OR REPAIRING BELOW GRADE ITEMS SUCH AS TANKS AND PIPING ENCOUNTERED DURING CONSTRUCTION UNLESS SPECIFICALLY NOTED ON CONTRACT DRAWINGS.

ROCK EXCAVATION AND REMOVAL IS EXCLUDED. ROCK EXCAVATION IS DEFINED AS ROCK WHICH CANNOT BE REMOVED BY ORDINARY MEANS. (TRACK HOE OR RUBBER TIRE BACK HOE)

BUILDING PAD

NEW FLOOR SLAB IS TO BE 6" CONCRETE WITH SYNTHETIC MACROFIBER ON 4" 304 CUSHION FILL ON COMPACTED SUBGRADE. OFFICE FLOOR SLAB IS TO BE 4" CONCRETE WITH SYNTHETIC MACROFIBER ON 4" 304 CUSHION FILL ON COMPACTED SUBGRADE. SUBGRADE IS TO BE COMPACTED TO A MINIMUM OF 100% STANDARD PROCTOR AND APPROVED BY A TESTING LABORATORY.

SITE CONCRETE

REPLACE THE EXISTING CURB WITH DEPRESSED CURB AT THE NEW DRIVE LOCATIONS PER CITY REQUIREMENTS.

SITE CONCRETE SHALL BE 6" THICK (4,000 PSI - AIR ENTRAINED) WITH SYNTHETIC MACROFIBER ON 4" OF COMPACTED 304 AGGREGATE ON COMPACTED SUBGRADE. (4" THICK FOR SIDEWALKS AND DOOR STOOPS)

UTILITIES

EXISTING UTILITIES ARE SHOWN IN THEIR APPROXIMATE LOCATION ACCORDING TO THE BEST AVAILABLE DATA. THE CONTRACTOR WILL BE RESPONSIBLE FOR LOCATING THEM IN THE FIELD PRIOR TO CONSTRUCTION AND WILL BE RESPONSIBLE FOR ANY DAMAGE DONE TO THEM. CONTRACTOR TO CONTACT OHIO UTILITIES PROTECTION SERVICE (1-800-362-2764) 48 HOURS PRIOR TO CONSTRUCTION.

UNDERGROUND WATER LINE / FIRE PROTECTION CONTRACTORS ARE TO DETERMINE THE SIZE OF THE WATERLINE AND TO VERIFY THE LOCATIONS OF FIRE DEPARTMENT CONNECTIONS, FIRE HYDRANTS, CAPACITY REQUIREMENTS, TAP FEES, METER PIT REQUIREMENTS, ETC. WITH THE LOCAL FIRE DEPARTMENT.

FURNISH AND INSTALL A COMPLETE SANITARY SEWER LINE, SPRINKLER WATER LINE, DOMESTIC WATER LINE, AND NATURAL GAS SERVICE LINE FROM THE BUILDING TO THE EXISTING MAIN OR PROPERTY LINE AS REQUIRED BY SUBCONTRACTOR DESIGN. INSTALLATION SHALL CONFORM WITH OHIO BUILDING CODES AND/OR LOCAL REQUIREMENTS.

COMPACTED GRANULAR BACKFILL SHALL BE INSTALLED ON ALL PIPING UNDER BUILDINGS, PAVEMENT AREAS AND ANY PIPING WITHIN 5 FEET OF EDGE OF PAVEMENT.

ALL SANITARY AND WATERLINE WORK MUST COMPLY WITH CITY ENGINEERS STANDARDS AND INSTALLED PER THE NATIONAL PLUMBING CODE. ENTIRE SEWER LATERAL SHALL BE INSPECTED AND PRESSURE TESTED.

ALL WATER LINES MUST BE TESTED PER CITY STANDARDS.

ALL STORM AND SANITARY PIPING MATERIALS UNDER A BUILDING ARE TO COMPLY WITH TABLE 702.2 OF THE 2017 OHIO PLUMBING CODE. ALL PIPING TO BE INSTALLED PER CODE.

WATERLINES SHALL HAVE 4'-6" MINIMUM COVER, THE WATER SERVICE SHALL BE TYPE 'K' COPPER AND HAVE A BACKFLOW PREVENTOR.

AT CROSSING THE WATERLINE SHALL HAVE A MINIMUM VERTICAL DISTANCE OF 18" FROM STORM AND SANITARY SEWERS. ALSO ONE FULL LENGTH OF WATER MAIN SHALL BE LOCATED SO THE JOINTS ARE AS FAR FROM THE STORM SANITARY SEWERS AS POSSIBLE.

ALL WORK MUST COMPLY WITH CITY STANDARDS.

STORM WATER MANAGEMENT

NEW STORM PIPING TO BE ADS N-12 ST IB PIPE OR EQUAL AND INSTALLED PER PIPE MANUFACTURERS SPECIFICATIONS.

FURNISH AND INSTALL A COMPLETE SITE DRAINAGE SYSTEM CONSISTING OF PIPING, CONCRETE ODOT HW-1.1 FULL HEIGHT HEADWALLS, CATCH BASINS AND MANHOLES AS SHOWN.

DOWNSPOUTS TO BE CONNECTED TO SITE DRAINAGE SYSTEM USING PVC BOOTS, PVC PIPE AND PVC 45° FITTINGS. VERIFY DOWNSPOUT LOCATIONS ON THE BUILDING ELEVATION DRAWINGS.

EXCAVATING CONTRACTOR TO NOTIFY GENERAL CONTRACTOR OF ANY DRAWING DISCREPANCIES OF UTILITIES DISCOVERED THAT ARE NOT SHOWN ON THE SITE PLAN.

ASPHALT NOTES

STANDARD ASPHALT PAVEMENT SHALL CONSIST OF 1-1/2" OF ASPHALT SURFACE COURSE TYPE 1, PG 64-22 ON 1-1/2" OF ASPHALT INTERMEDIATE COURSE, TYPE 2, PG 64-22 ON 7" OF COMPACTED 304 AGGREGATE ON COMPACTED SUBGRADE.

HEAVY-DUTY ASPHALT PAVEMENT SHALL CONSIST OF 1-1/2" OF ASPHALT SURFACE COURSE TYPE 1, PG 64-22 ON 2-1/2" OF ASPHALT INTERMEDIATE COURSE, TYPE 2, PG 64-22 ON 9" OF COMPACTED 304 AGGREGATE ON COMPACTED SUBGRADE.

PAVING DESIGN IS BASED UPON A MAXIMUM DEFLECTION OF THE SUBGRADE SOILS OF 1/2" DURING PROOF ROLLING OPERATIONS. ADDITIONAL COSTS FOR REMOVAL OF UNSTABLE SOILS FOUND DURING PROOF ROLLING OPERATIONS MUST BE ADDED TO CONTRACT BY CHANGE ORDER.

CLEANING OF ASPHALT AND ITEM 407 TACK COAT IS REQUIRED IF MORE THAN (3) WORKING DAYS PASS BETWEEN LAYING OF ASPHALT SURFACE COURSE TYPE 1 AND ASPHALT INTERMEDIATE COURSE TYPE 2. (0.1 GAL. / SQ. YD.).

ASPHALT CONTRACTOR IS RESPONSIBLE FOR SAW-CUTS AND A.C. SEALER WHERE PROPOSED ASPHALT MEETS EXISTING ASPHALT.

PARKING LOT STRIPING IS TO RECEIVE ONE COAT OF WHITE PAINT 4" WIDE AS PER LAYOUT ON SITE PLAN INCLUDING DIRECTIONAL ARROWS WHERE SHOWN. (BY ASPHALT CONTRACTOR)

HANDICAP PARKING

PROVIDE SYMBOL OF ACCESSIBILITY PARKING SIGNS AT ALL HANDICAP ACCESSPARKING SPACES PER OBC SECTION 1110 AND ADAAG REQUIREMENTS. UNIVERSAL PARKING SPACE DESIGN USED PER ADAAG A4.6.3 REQUIREMENTS.

SEEDING AND LANDSCAPING

AREAS DISTURBED BY CONSTRUCTION SHALL BE SEEDED. (FERTILIZER, STRAW, ROCK PICK-UP, MULCH & TACKIFIER, ETC. REQUIRED)

CONTRACTOR SHALL SEED OR MULCH ANY DISTURBED AREAS WITHIN 14 DAYS OF FINAL GRADING.

LANDSCAPING SHALL BE BY THE OWNER.

SEEDING CONTRACTOR IS RESPONSIBLE FOR CREATING PROPER CONDITIONS TO ALLOW FOR OPTIMIZATION OF GRASS SEED GERMINATION AND CONTINUED GROWTH. SEEDING CONTRACTOR WILL BE REQUIRED TO DO ROCK PICK UP AND VERIFY ADEQUATE PLACEMENT OF TOPSOIL, SEED, FERTILIZER, MULCH & TACKIFIER AND/OR STRAW AS REQUIRED. SEEDING CONTRACTOR IS TO NOTIFY GENERAL CONTRACTOR ANY CONDITIONS NOT CONDUCIVE TO ENSURING ESTABLISHED GRASS. UPON COMPLETION AND AFTER INITIAL WATERING THE OWNER WILL BE RESPONSIBLE FOR WATERING AS REQUIRED.

2 WORKING DAYS BEFORE YOU DIG
CALL TOLL FREE 800-362-2764
OHIO UTILITIES PROTECTION SERVICE

Revisions

#	Date	Description

Copyright © 2023 Ferguson Construction Company

The dissemination or duplication of this architectural and engineering drawing is prohibited without the prior written consent of Ferguson Construction Company.

NOT FOR CONSTRUCTION

NEW FACILITY FOR **INNOMARK**
MONTGOMERY COUNTY
SOUTH TECH BLVD.
SPRINGBORO, OHIO 45342

FERGUSON CONSTRUCTION
www.ferguson-construction.com

Sidney, Ohio
400 Canal Street
Sidney, OH 45365-0726
Phone: (937) 498-2381

Dayton, Ohio
825 South Ludlow Street
Dayton, OH 45402
Phone: (937) 274-1173

Columbus, Ohio
3595 Johnny Appleseed Ct.
Columbus, OH 43231
Phone: (614) 876-8496

Indianapolis, Indiana
7157 W. 200 N.
Greenfield, IN 46140
Phone: (317) 477-3615

Job Number	E-42028
Date	5/24/23
Drawn By	BJR
Checked By	DJW

NOTES & DETAILS

C-1.2

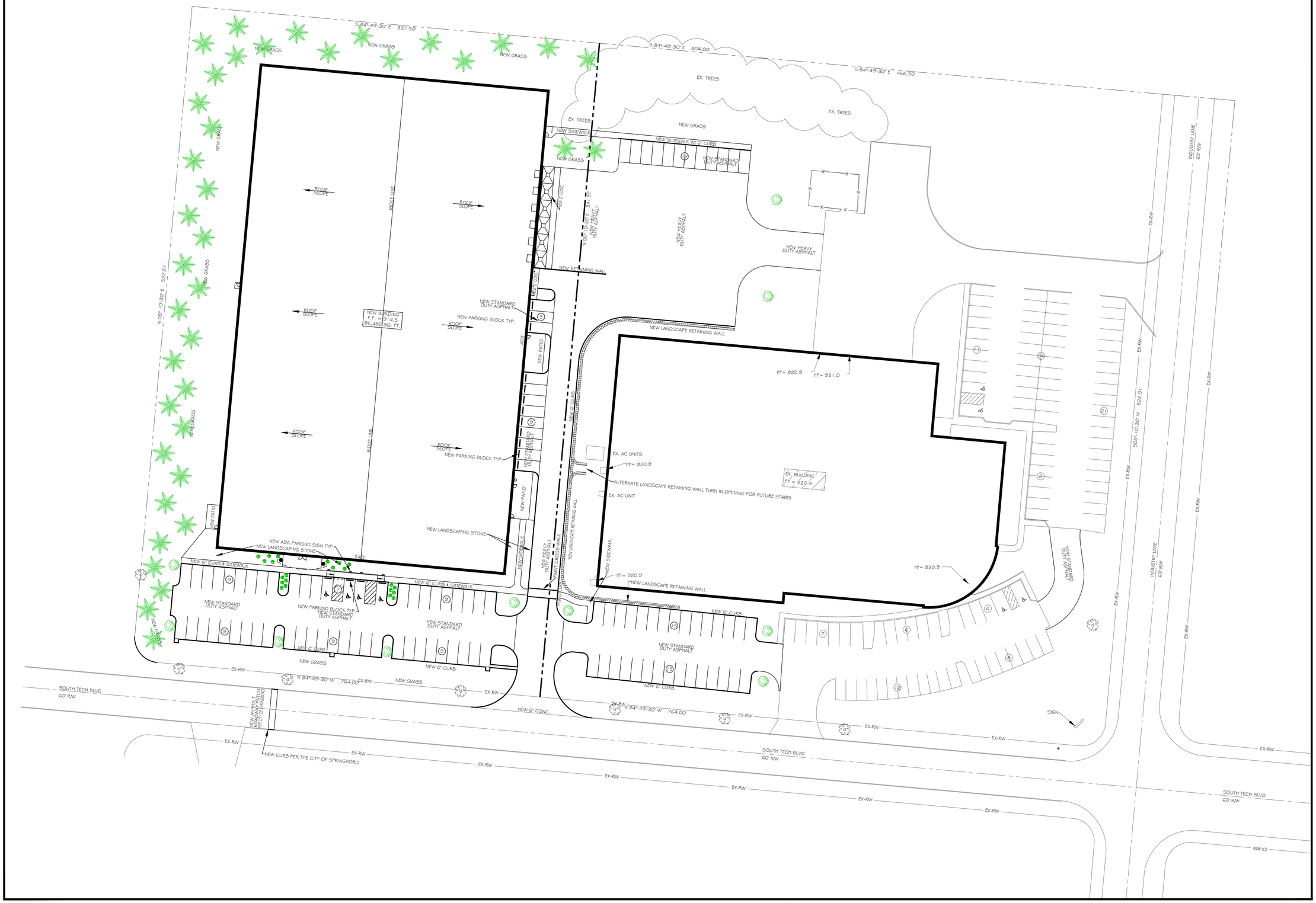

LANDSCAPING PLAN SCALE : 1" = 30'-0"

2 WORKING DAYS BEFORE YOU DIG
CALL TOLL FREE 800-362-2764
OHIO UTILITIES PROTECTION SERVICE

Revisions

#	Date	Description

Copyright © 2023
Ferguson Construction Company

The dissemination or duplication of this architectural and engineering drawing is prohibited without the prior written consent of Ferguson Construction Company.

NOT FOR CONSTRUCTION

NEW FACILITY FOR
INNOMARK
MONTGOMERY COUNTY
SOUTH TECH BLVD.
SPRINGBORO, OHIO 45342

FERGUSON CONSTRUCTION
www.ferguson-construction.com

Sidney, Ohio
400 Canal Street
Sidney, OH 45365-0726
Phone: (937) 498-2381

Dayton, Ohio
825 South Ludlow Street
Dayton, OH 45402
Phone: (937) 274-1173

Columbus, Ohio
3595 Johnny Appleseed Ct.
Columbus, OH 43231
Phone: (614) 876-8496

Indianapolis, Indiana
7157 W. 200 N.
Greenfield, IN 46140
Phone: (317) 477-3615

Job Number	E-42028
Date	5/24/23
Drawn By	BJR
Checked By	DJW

LANDSCAPING PLAN

LP-1.1

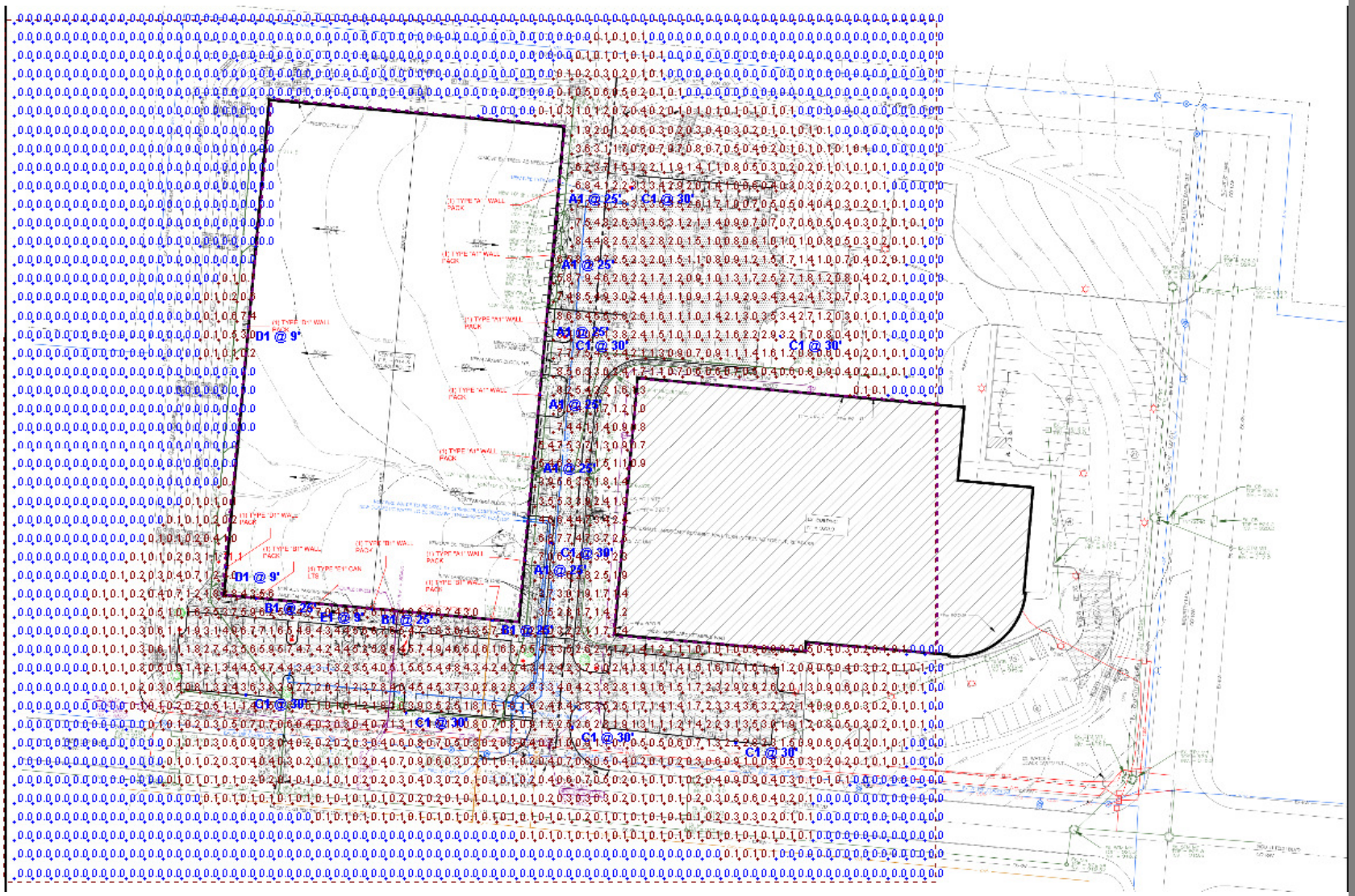

Innomark

Designer
Bryan Schneider
Date
05/23/2023
Scale
Not to Scale
Drawing No.

Summary

K451-1-2-Pt2 & Pt4

Plat 176 Page 60

INCHES 1 2 3 4

PLAT BOOK 176 PAGE: 60

Montgomery County
PLAT-99-17668 0000
Jay Clark, Recorder
Rec.At 11/12/99 08:57:42

TRANSFERRED
99 NOV 12 AM 8:40
A.E. WARNER
AUDITOR

RECORD PLAN

SOUTH TECH SECTION TWELVE

LOCATED IN
SECTION 16, TOWN 2, RANGE 5 M.R.S.
CITY OF SPRINGBORO
MONTGOMERY COUNTY, OHIO

CONTAINING 12.4810 ACRES

JULY 28, 1999

SHEET 1 OF 2

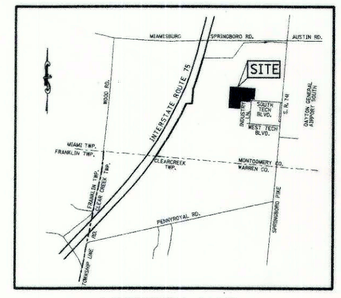

VICINITY MAP
NOT TO SCALE

REFERENCES
M.F. 89-0445 C12
M.F. 97-0692 D06
P.B. 176, Pg. 33
P.B. 176, Pg. 31
P.B. 176, Pg. 32
P.B. 174, Pg. 39
P.B. 132, Pg. 32

South Tech Sec. B
LOT B
P.B. 176 Pg. 31

Basis of Bearing: Centerline of SouthTech Blvd as recorded in Plat Book 132 page 32

0 40 80 120 160
GRAPHIC SCALE
SCALE: 1" = 40'

Indicates Concrete Monument Found
Indicates Concrete Monument Set
Indicates Iron Pin Found
Indicates Iron Pin Set

LEGEND

FUTURE STREET

N 0°13'50"E ~813.17'

N 0°13'50"E 100.00'

5/8" ID Sat

EASEMENT 10' UTILITY

R=20.00
I=90°00'00"(RT)
A=31.42
Lch=N 44°46'10"W
~ 28.28

N 0°13'50"E ~361.86'

LOT 16
7.0441 Acres

DANIS PROPERTIES COMPANY INC.
M.F. 89-0445-C12

DANIS PROPERTIES COMPANY INC.
M.F. 97-0692-D06

S 89°46'10"E ~804.00'

S 89°46'10"E ~804.00'

S 89°46'10"E ~60.00'

INDUSTRY LANE

R/W

S 0°13'50"W ~361.86'

N 0°13'50"E ~350.86'

S 0°13'50"W ~350.86'

ROW
0.4833
Ac.

N 89°46'10"W ~60.00'

EASEMENT 10' UTILITY

N 89°46'10"W ~764.00'

S 89°46'10"E ~760.00'

ROW
1.0783 Acres

SOUTH TECH BLVD.

S 0°13'50"W ~11.00'

R=20.00
I=90°00'00"(RT)
A=31.42
Lch=S 45°13'50"W
~ 28.28

S 0°13'50"W ~60.00'

N 89°46'10"W ~4.00'

SOUTH TECH BLVD

N 89°46'10"W ~760.00'

S 89°46'10"E ~433.90'

10' UTILITY EASEMENT

R=20.00
I=90°00'00"(RT)
A=31.42
Lch=N 45°13'50"E
~ 28.28

N 89°46'10"W ~326.10'

Exist. 10' Utility Easement
South Tech Sec. 10
P.B. 176 Pg. 33

LOT 15
3.8753 Acres

South Tech Sec. 10
LOT 10
P.B. 176 Pg. 33

S 0°13'50"W ~372.90'

N 0°13'50"E ~361.31'

EASEMENT 10' UTILITY

South Tech Sec. 1A
LOT 1
P.B. 174 Pg. 38

ACREAGE TABLE

LOTS	
LOT 16	7.0441
LOT 15	3.8753
Ac. IN LOTS	10.9194
ROW	
INDUSTRY LN.	0.4833
SO. TECH BLVD.	1.0783
Ac. IN ROW	1.5616
TOTAL =	12.4810

60' R/W
P.B. 174 Pg. 39

N 89°34'10"W ~453.90'

South Tech Sec. 9
LOT 9
P.B. 176 Pg. 32

NOTE:
NO ADDITIONAL OCCUPATION INFORMATION OTHER THAN MONUMENTATION.

UTILITY EASEMENT

EASEMENTS SHOWN ON THE WITHIN PLAT ARE RESERVED FOR THE CONSTRUCTION, OPERATION, MAINTENANCE, REPAIR, REPLACEMENT, OR REMOVAL OF WATER, SEWER, GAS, ELECTRIC, TELEPHONE, OR OTHER UTILITY LINES OR SERVICES AND FOR THE EXPRESS PRIVILEGE OF REMOVING ANY OR ALL TREES OR OTHER OBSTRUCTIONS TO THE FREE USE OF SAID UTILITIES, AND FOR PROVIDING INGRESS TO AND EGRESS FROM THE PREMISES FOR SAID PURPOSES, AND ARE TO BE MAINTAINED AS SUCH FOREVER.

DEDICATION

WE, THE UNDERSIGNED, BEING ALL OWNERS OF THE LANDS HEREIN DEDICATED, DO HEREBY VOLUNTARILY CONSENT TO THE EXECUTION OF THE SAID DEDICATION AND DO HEREBY DEDICATE THAT PORTION OF SOUTH TECH BOULEVARD AND INDUSTRY LANE AS SHOWN HEREON TO THE PUBLIC USE FOREVER ACCORDING TO THE LAW IN SUCH CASES MADE AND PROVIDED.

GRANT OF EASEMENT

FOR VALUABLE CONSIDERATION, WE, THE UNDERSIGNED DO HEREBY GRANT TO CINCINNATI GAS & ELECTRIC COMPANY, DAYTON POWER AND LIGHT AND AMERITECH, THEIR SUCCESSORS AND ASSIGN, FOREVER, NONEXCLUSIVE EASEMENTS, AS SHOWN ON THE WITHIN PLAT AND AS DESIGNATED AS UTILITY EASEMENTS (UE), FOR THE CONSTRUCTION, OPERATION, MAINTENANCE REPAIR OR REPLACEMENTS OF ANY AND ALL NECESSARY FIXTURES FOR THE OVERHEAD OR UNDERGROUND DISTRIBUTION OF GAS, ELECTRIC, TELEPHONE OR TELECOMMUNICATIONS, OR OTHER UTILITIES. SAID UTILITY COMPANIES SHALL HAVE THE RIGHT OF INGRESS AND EGRESS AND ALSO THE RIGHT TO CUT, TRIM OR REMOVE ANY TREES, UNDERGROWTH OR OVERHANGING BRANCHES WITHIN SAID EASEMENT OR IMMEDIATELY ADJACENT THERETO. NO BUILDINGS OR OTHER STRUCTURES MAY BE BUILT WITHIN SAID EASEMENTS, NOR MAY THE EASEMENT AREAS BE PHYSICALLY ALTERED SO AS TO (1) REDUCE CLEARANCES OF EITHER OVER HEAD OR UNDERGROUND FACILITIES, (2) IMPAIR THE LAND SUPPORT OF SAID FACILITIES; (3) IMPAIR ABILITY TO MAINTAIN THE FACILITIES OR (4) CREATE A HAZARD. TO HAVE AND TO HOLD THE SAID EASEMENTS FOREVER. WE ACKNOWLEDGE HAVING FULL POWER TO CONVEY THIS EASEMENT, AND WILL DEFEND THE SAME AGAINST ALL CLAIMS.
THE ABOVE EASEMENTS ARE ALSO DEDICATED FOR OTHER PUBLIC USES AS DESIGNATED AND SHALL BE USED FOR THE CONSTRUCTION OF STORM WATER DRAINS (DE), PUBLIC SEWERS (SSE), OPEN CHANNELS (OCDE), PIPE LINES FOR THE SUPPLYING OF WATER, CABLE TELEVISION AND ANY OTHER PUBLIC OR QUASI PUBLIC UTILITY OR FUNCTION, CONDUCTED, MAINTAINED OR PERFORMED BY ORDINARY METHODS BENEATH OR ABOVE THE SURFACE OF THE GROUND TOGETHER WITH THE RIGHT OF INGRESS AND EGRESS OVER AND ACROSS LOTS TO AND FROM SAID EASEMENTS.

CERTIFICATION & DESCRIPTION

I hereby certify that the within plat is a subdivision containing 12.4810 acres of land conveyed to Danis Properties Company Inc. 10.4876 Acres by M.F. 89-0445-C12, and 1.9934 Acres M.F. 97-0692-D06 of the deed records of Montgomery County, Ohio. Also that the measurements are certified correct, iron pins and monuments will be set as shown. Curved distances are measured on the arc.

Prepared by:
Lockwood, Jones and Beals, Inc.

STATE OF OHIO
JAMES P. BENEDICT
S-8583
REGISTERED SURVEYOR

James Benedict 7/20/99

JAMES D. BENEDICT
OHIO PROFESSIONAL SURVEYOR No. 8583

PREPARED BY:

LJB engineers architects

LOCKWOOD, JONES AND BEALS INC.
HEADQUARTERS
3128 RESEARCH BLVD. P.O. BOX 28248
DAYTON, OHIO 45428-0248
TEL: (513) 258-5000 FAX (513) 258-5100

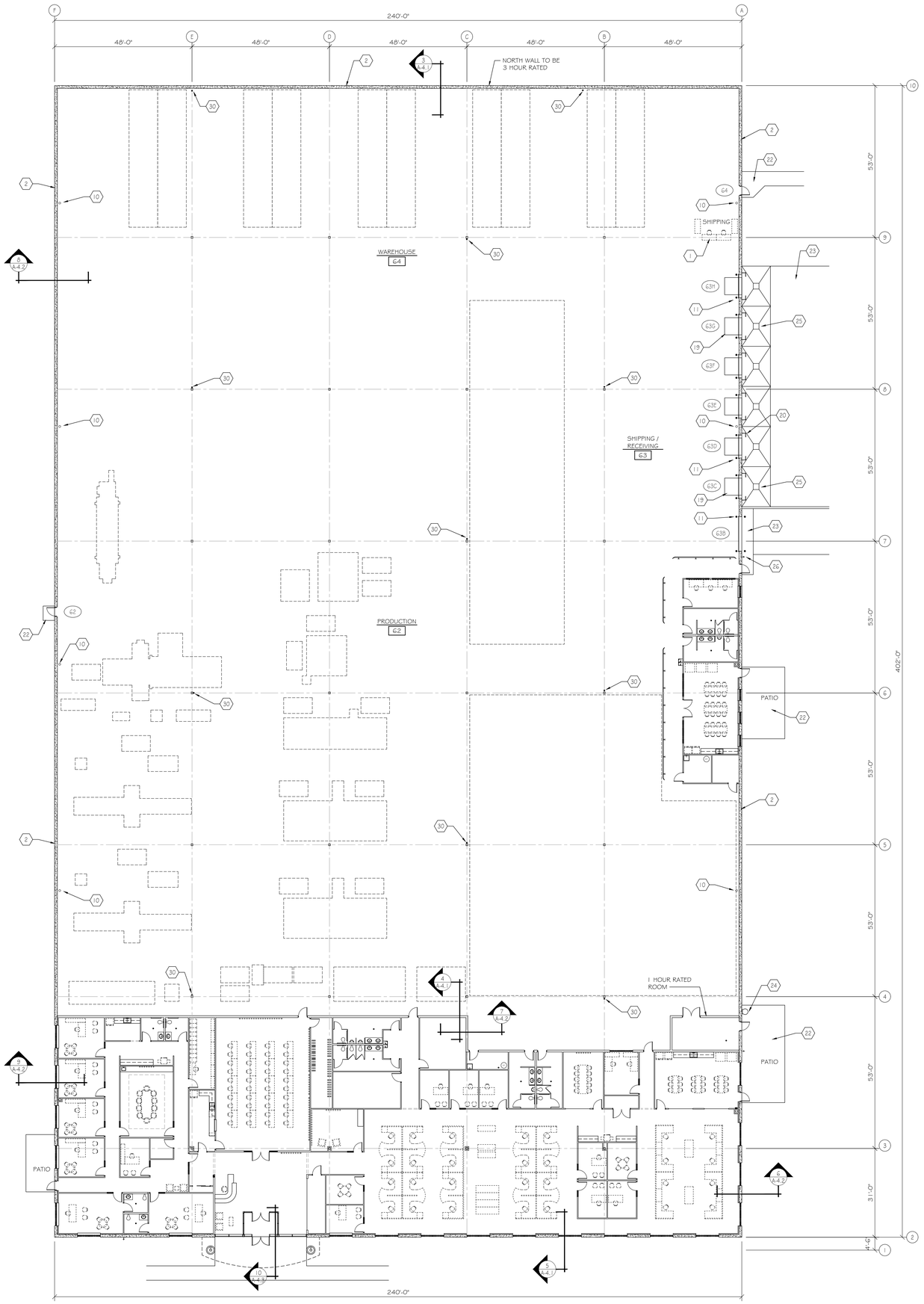

CONSTRUCTION NOTES

1. FURNITURE, MAGNETIC BOARDS, EQUIPMENT, SIGNS, ETC., TO BE FURNISHED AND INSTALLED BY OWNER.
2. PRECAST CONCRETE WALL PANELS
3. 5/8" THICK GYPSUM DRYWALL BOTH SIDES OF 3 5/8" THICK METAL STUDS @ 16" O/C, 20 GAUGE TO UNDERSIDE OF DUST COVER W/ 3-1/2" THICK FIBERGLASS BATT INSULATION BETWEEN STUDS. SEE ROOM FINISH SCHEDULE FOR CEILING HEIGHTS. SEE WALL SECTION FOR DUST COVER CONSTRUCTION.
4. HOLLOW METAL FRAME AND GLASS VISION PANEL. SEE FRAME ELEVATION SHEET A-5.1.
5. 3'-0" DIA. MASONRY VENEER COLUMN ON METAL STUDS WITH STRUCTURAL TUBE COLUMN FOR SUPPORT OF CANOPY. INSTALL INTERIOR DOWNSPOUT WITH CONNECTION TO STORM SYSTEM.
6. RECEPTIONIST DESK FURNISHED AND INSTALLED BY GENERAL CONTRACTOR. PROVIDE ALLOWANCE.
7. 5/8" THICK GYPSUM DRYWALL ON ONE SIDE OF 3 5/8" THICK METAL STUDS @ 16" O/C, 20 GAUGE TO UNDERSIDE OF DUST COVER W/ 3-1/2" THICK FIBERGLASS BATT INSULATION BETWEEN STUDS. SEE ROOM FINISH SCHEDULE FOR CEILING HEIGHTS. SEE WALL SECTION FOR DUST COVER CONSTRUCTION.
8. SOLID SURFACE COUNTERTOP WITH SINK. SEE COUNTERTOP SECTION A SHEET A-5.2
9. 5/8" THICK GYPSUM DRYWALL ON BOTH SIDES OF 6" THICK METAL STUDS @ 16" O/C, 20 GAUGE TO ABOVE CEILINGS W/ 6" THICK FIBERGLASS BATT INSULATION BETWEEN STUDS. SEE ROOM FINISH SCHEDULE FOR CEILING HEIGHTS.
10. INTERIOR DOWNSPOUT FROM ROOF DRAIN ABOVE CONNECTED TO STORM SYSTEM BY PLUMBING SUBCONTRACTOR.
11. 6" DIAMETER X 7'-0" LONG CONCRETE FILLED STEEL GUARD POST, 4'-0" A.F.F. SET IN MAX. 1/2 CUBIC YARD OF CONC. (TYP.)
12. PROVIDE HIGHWAY TYPE GUARDRAIL W/ FLARED ENDS MOUNTED ON W6X9 WIDEFLANGE POSTS W/ 1/2" THICK X 10" X 10" BASE PLATE ANCHORED TO CONCRETE FLOOR W/ (4) 3/4" DIA. EXPANSION ANCHORS. TOP OF GUARDRAIL TO BE 2'-6" A.F.F.
13. 5/8" THICK GYPSUM DRYWALL ON ONE SIDE OF 3 5/8" THICK METAL STUDS @ 16" O/C, 20 GAUGE TO ABOVE CEILINGS W/ 3-1/2" THICK FIBERGLASS BATT INSULATION BETWEEN STUDS. SEE ROOM FINISH SCHEDULE FOR CEILING HEIGHTS.
14. 5/8" THICK GYPSUM DRYWALL BOTH SIDES OF 3 5/8" THICK METAL STUDS @ 16" O/C, 20 GAUGE TO ABOVE CEILINGS W/ 3-1/2" THICK FIBERGLASS BATT INSULATION BETWEEN STUDS. SEE ROOM FINISH SCHEDULE FOR CEILING HEIGHTS.
15. 5/8" THICK GYPSUM DRYWALL BOTH SIDES OF 8" THICK METAL STUDS @ 16" O/C, 18 GAUGE, FULL HEIGHT TO UNDERSIDE OF ROOF W/ 8" THICK FIBERGLASS BATT INSULATION.
16. BOX AROUND STEEL COLUMNS W/ 5/8" THICK GYPSUM DRYWALL ON METAL STUDS (BOX TO BE MINIMUM SIZE).
17. DRYWALL CASED HEADER AT 8'-0" ABOVE FINISH FLOOR.
18. 3'-0" WIDE X 7'-2" HIGH DRYWALL CASED OPENING.
19. 6' X 6' STANDARD DOCK LEVELER, 30,000# MINIMUM CAPACITY, MANUALLY OPERATED W/ WEATHERSEAL AND BUMPERS.
20. DOCK SHELTERS.
21. SOLID SURFACE COUNTERTOP WITH SINK ON PLASTIC LAMINATE COVERED VANITY CABINET. SEE CABINET ELEVATION 9 SHEET A-5.3
22. 4" THICK POURED CONCRETE APRON REINFORCED WITH 3# PER CUBIC YARD FIBER MESH ON COMPACTED OR UNDISTURBED EARTH.
23. 6" THICK POURED CONCRETE APRON REINFORCED WITH 3# PER CUBIC YARD FIBER MESH ON COMPACTED OR UNDISTURBED EARTH.
24. CAGED LADDER TO ROOF BY STEEL SUPPLIER. VERIFY EXACT LOCATION WITH OWNER.
25. DOCK DRAIN CONNECTED TO STORM SYSTEM BY SITE SUBCONTRACTOR. REFER TO SITE PLAN FOR CONTINUATION.
26. FROST PROOF HOSE BIBB BY PLUMBING SUBCONTRACTOR.
27. WATER HEATER BY PLUMBING SUBCONTRACTOR.
28. DUAL HEIGHT HANDICAP TYPE ELECTRIC WATER COOLER BY PLUMBING SUBCONTRACTOR.
29. 2' x 2' FLOOR MOUNTED FIBERGLASS MOP BASIN BY PLUMBING SUBCONTRACTOR. ON WALLS AT THE MOP BASIN, G.C. TO INSTALL WHITE FIBERGLASS REINFORCED PANELS (FRP) 2'-6" WIDE x 2'-6" HIGH COMPLETE WITH ALL TRIMS.
30. FIRE EXTINGUISHERS FURNISHED AND INSTALLED BY GENERAL CONTRACTOR. TOP MOUNTED AT 4'-0" AFF. INSTALL SEMI-RECESSED CABINETS IN OFFICE AREA WHERE SHOWN.

OVERALL FLOOR PLAN SCALE : 1/16" = 1'-0"
96,480 SQUARE FEET

Revisions		
#	Date	Description

Copyright © 2023 Ferguson Construction Company

The dissemination or duplication of this architectural and engineering drawing is prohibited without the prior written consent of Ferguson Construction Company.

PRELIMINARY

NEW FACILITY FOR
INNOMARK
MONTGOMERY COUNTY
SOUTH TECH BLVD.
SPRINGBORO, OHIO 45342

FERGUSON CONSTRUCTION
www.ferguson-construction.com

Sidney, Ohio
400 Canal Street
Sidney, OH 45365-0726
Phone: (937) 498-2381

Dayton, Ohio
825 South Ludlow Street
Dayton, OH 45402
Phone: (937) 274-1173

Columbus, Ohio
3595 Johnny Appleseed Ct
Columbus, OH 43231-4985
Phone: (614) 876-8496

Indianapolis, Indiana
7157 W. 200 N.
Greenfield, IN 46140
Phone: (317) 477-3615

Job Number	E-42028
Date	5/19/23
Drawn By	JTS
Checked By	JWM

OVERALL FLOOR PLAN

A-1.0

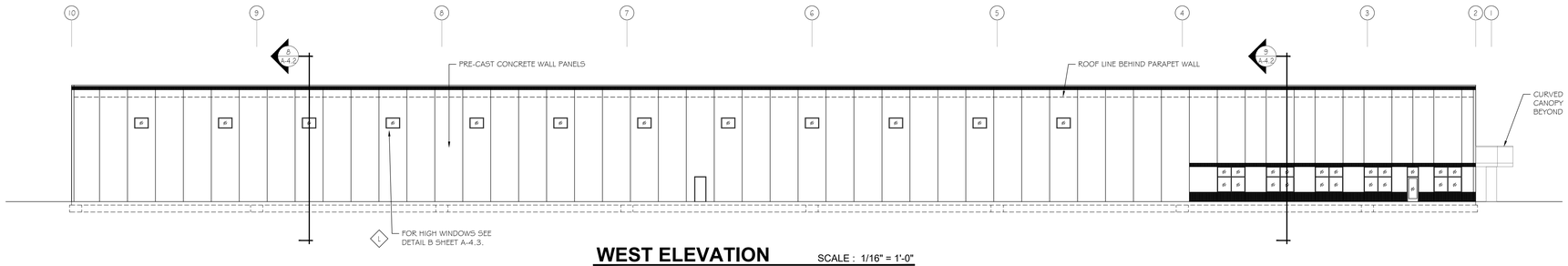

WEST ELEVATION SCALE : 1/16" = 1'-0"

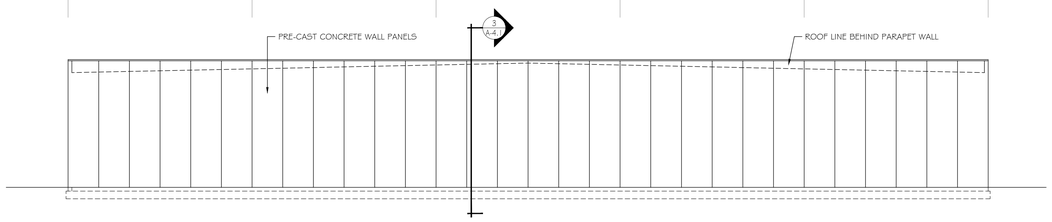

NORTH ELEVATION SCALE : 1/16" = 1'-0"

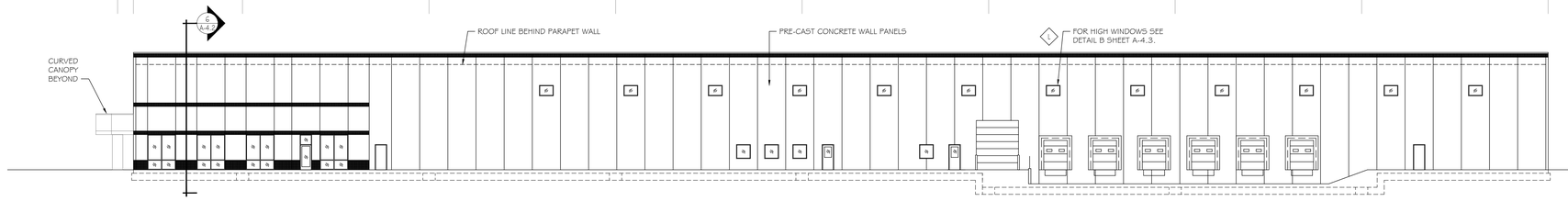

EAST ELEVATION SCALE : 1/16" = 1'-0"

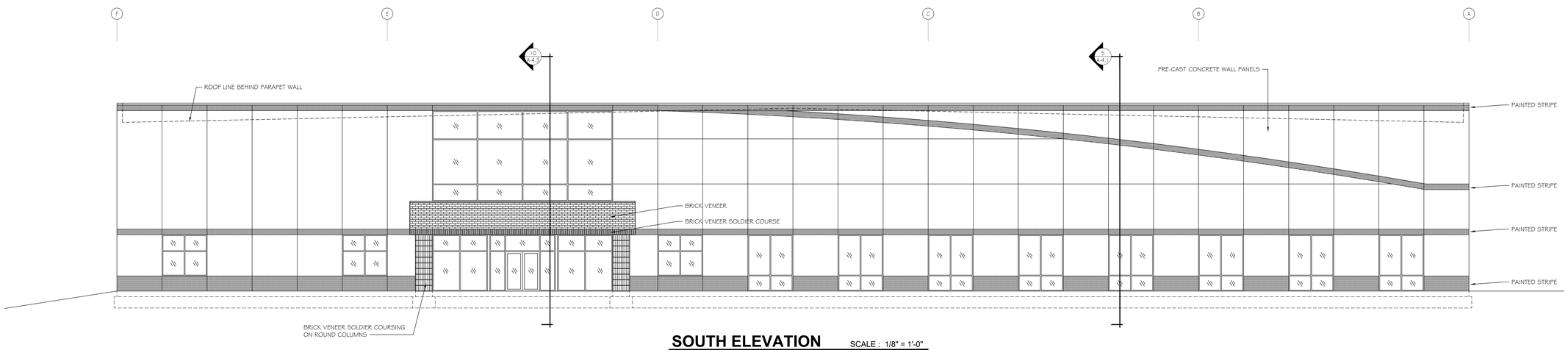

SOUTH ELEVATION SCALE : 1/8" = 1'-0"

Revisions

#	Date	Description

Copyright © 2023
Ferguson Construction Company

The dissemination or duplication of this architectural and engineering drawing is prohibited without the prior written consent of Ferguson Construction Company.

PRELIMINARY

NEW FACILITY
FOR
INNOMARK
MONTGOMERY COUNTY
SOUTH TECH BLVD.
SPRINGBORO, OHIO 45342

FERGUSON CONSTRUCTION
www.ferguson-construction.com

Sidney, Ohio
400 Canal Street
Sidney, OH 45365-0726
Phone: (937) 498-2381

Dayton, Ohio
825 South Ludlow Street
Dayton, OH 45402
Phone: (937) 274-1173

Columbus, Ohio
3595 Johnny Appleseed Ct
Columbus, OH 43231-4985
Phone: (614) 876-8496

Indianapolis, Indiana
7157 W. 200 N.
Greenfield, IN 46140
Phone: (317) 477-3615

Job Number	E-42028
Date	5/19/23
Drawn By	JTS
Checked By	JWM

BUILDING ELEVATIONS

A-3.1

Schedule

Symbol	Label	Quantity	Manufacturer	Catalog Number	Description	Number Lamps	Lumens Per Lamp	Light Loss Factor	Wattage
	A1	6	Industrial Lighting Products Inc	SAS-15L-U-30-T2	Skyline Small, 15,000 Lumens, 3000K, Type 2 Optic	1	17008	0.85	110.5
	B1	3	Industrial Lighting Products Inc	SAM-30L-U-30-T4	Skyline Medium, 30,000 Lumens, 3000K, Type 4 Optic	1	30135	0.85	194.2
	C1	8	Industrial Lighting Products Inc	SAM-30L-U-30-T4	Skyline Medium, 30,000 Lumens, 3000K, Type 4 Optic	1	30135	0.85	194.2
	D1	2	Industrial Lighting Products, LLC	SWP-5L-U-40-BRZ	SWP-5L-U-40-BRZ	1	5669	0.9	39
	E1	1	ILP		CP-3L-U-40	1	3476	0.9	28.4

Statistics

Description	Symbol	Avg	Max	Min	Max/Min	Avg/Min
Layout	+	0.9 fc	11.1 fc	0.0 fc	N/A	N/A

Note

1. Dimensions:
2. Mounting Height: 30, 25, 9
3. Calc Zone: 0
4. Reflectances:

Calculations provided are estimates only.

Innomark

Designer
Bryan Schneider
Date
06/14/2023
Scale
Not to Scale
Drawing No.

Summary

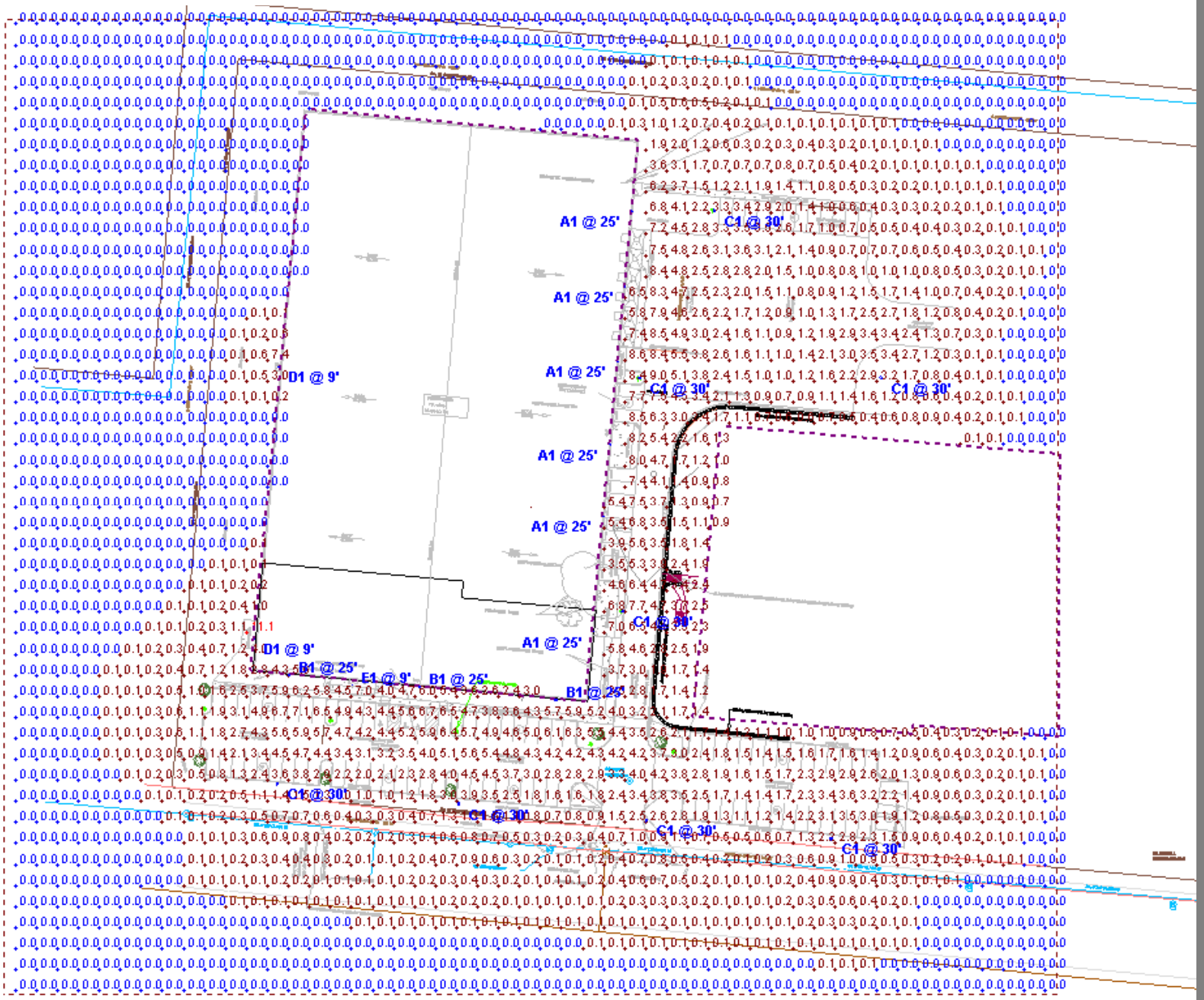

ILP

Innomark

Designer
Bryan Schneider
Date
06/14/2023
Scale
Not to Scale
Drawing No.

Summary

Project Name:	Part Number: SAS-15L-U-30-T2-UMB-BRZ	Type: A1

SKYLINE

AREA LIGHT SERIES



* Shown with UMB Mounting

407-478-3759
www.ilp-inc.com

Product Overview

SCAN ME

FEATURES

- Specification Grade die-cast aluminum housing
- Bronze polyester powder coat finish (standard)
- Custom and factory select colors available
- 5 Optical Distributions with Highest Uniformity in their product class
- Factory Rotatable Type 2, 3, 4, 5 Square, & Automotive Front Row Optics
- Optional Spill Light Control Integral Shield (HSS)
- Universal Quick Pole Mount Allows for 1 man installation on existing poles with no drilling required
- 9 Different Optional Mounting Methods (3G Rated)[3]
- Single Fastener hinged door driver access
- 120–277V Universal Voltage or 347–480V High Voltage
- 0–10V Dimmable Driver (std.)
- PIR Occupancy, Photocell, & Bi-Level Dimming Sensors Available
- 3-Pin & 7-Pin ANSI C136.41 Control Receptacle Options
- Wireless control integrated luminaire
- 3000K, 4000K & 5000K CCT
- >70 Color Rendering Index (CRI)
- Calculated L80 >100,000 hrs @ 25°C per TM-21-11
- IP66 Rated Luminaire
- Dark Sky Compliant[1,2]
- 5 Year Warranty; 10 Year Optional Warranty[4]
- ETL Listed for Wet Locations
- DesignLights Consortium® Premium Qualified Luminaire

[1] 3000K is IDA Listed [2] Must select UMB, WFM, or HTM mounting options to qualify
[3] TRN & SLPF 1.5G Rated [4] Requires additional Surge Protection (SP1, SP2, SP480V2); For additional details see General Terms and Conditions

SUITABLE APPLICATIONS

- Parking Lots
- Parking Structure
- Parks
- Education
- Hospitals
- Car Dealerships
- Roadways
- Shopping Centers

ORDERING GUIDE

SERIES	LUMENS	VOLTAGE	CCT	DISTRIBUTION	ORIENTATION	MOUNTING	FINISH	WARRANTY
☑ **SAS** Small	☐ **6L** 6,000 lm	☑ **U** 120-277v	☑ **30** 3000K	☑ **T2** T2 - Type 2	☑ (Blank) - Standard	☐ **SLPF** Adjustable Slip Fitter	☑ **BRZ**	☑ **(Blank)** 5YR
	☐ **9L** 9,000 lm	☐ **HV** 347-480v	☐ **40** 4000K	☐ **T3** T3 - Type 3	☐ **L** Optics Rotated Left	☑ **UMB** Universal Fixed	☐ **BLK**	☐ **10YR**[10] 10YR
	☐ **12L** 12,000 lm		☐ **50** 5000K	☐ **T4** T4 - Type 4	☐ **R** Optics Rotated Right	☐ **UMB/R** Universal Mount Sqr/ Rnd pole 3"-6"	☐ **WHT**	
	☑ **15L** 15,000 lm			☐ **T5S** Type 5 Square		☐ **UAB** Universal Adjustable	☐ **SLV**	
	☐ **18L** 18,000 lm			☐ **FTA** Forward Throw Automotive		☐ **UAB/R** Universal Adjustable Sqr/Rnd pole 3"-6"	☐ **RALxxxx**[9]	
						☐ **WFM** Wall Fixed Mount		
☐ **SAM** Med	☐ **24L** 24,000 lm					☐ **WAM** Wall Adjustable Mount		
	☐ **30L** 30,000 lm					☐ **TRN** Trunnion Mount		
	☐ **36L** 36,000 lm					☐ **HTM** Horizontal Tenon Mount		
	☐ **42L** 42,000 lm							
	☐ **50L** 50,000 lm							

BASIC CONTROLS

☐ **(Blank)**	None
☐ **FAO**[1,8]	Field Adjustable Output
☐ **CR3P**[8]	3-Pin NEMA Control receptacle
☐ **CR7P**[6,8]	7-Pin NEMA Control receptacle
☐ **FSP-311/LX**[1,3,8]	Legrand FSP-311 120-277V Sensor (X = Mounting Height 3=10-20', 7=20-40')
☐ **FSP-321/LX**[3,8]	Legrand FSP-321 347-480V Sensor (X = Mounting Height 3=10-20', 7=20-40')
☐ **CR3P/FAO**[8]	Universal 3-Pin control receptacle (See acc. for photocells) with Field Adjustable Output - 7 level selection connected to 0-10V dimming wires
☐ **CR7P/FSP/Lx**[8]	Universal 7-Pin control receptacle with FSP Sensor (X= Mounting Height, 3=20', 7=40') (Controls provided by others)

ADVANCED CONTROLS

☐ **(Blank)**	None
☐ **SYN**[5,8]	Synapse Control System
☐ **SYNS/LX**[5,8]	Synapse Control System w/ Sensor (X = Mounting Height 3=10-20', 7=20-40')
☐ **SU/5S/LR/IL**[1,8]	Enlighted 5S Individual Lighting (IL) Sensor with Control Unit
☐ **SU/5S/LR/CL**[1,8]	Enlighted 5S Connected Lighting (CL) Sensor with Control Unit
☐ **SU/5S/LR/IOT**[1,8]	Enlighted 5S Internet of Things (IOT) Sensor with Control Unit
☐ **ZLD1Z**[1,3,8]	Leviton ZLD1Z 120-277V Bluetooth Groupable Sensor (16 Devices) with 8-20' & 20-40' lens included

OPTIONS - FACTORY INSTALLED

☐ **(Blank)**	None
☐ **SP1**[1]	10kA Surge Protection Device
☐ **SP2**[1]	20kA Surge Protection Device
☐ **SP1HV**	10kA Max 480V Surge Protector
☐ **SP480V2**	20kA Max 480V Surge Protector
☐ **HSS**[2]	Rotatable House Side Shield
☐ **FUSE/SXXX**	FUSE 120V, 277V, 347V (x= voltage)
☐ **FUSE/DXXX**	FUSE 208V, 240V, 480V (x= voltage)

ACCESSORIES

☐ **SAx/BIRD**	Bird Spikes (x= fixture size)
☐ **SAx/GS**[2]	Rotatable Glare Shield (x= fixture size)
☐ **TL7/B2**[1,5,7]	Synapse Twist Lock Mesh Network 120-277V
☐ **ILP PAINT CHIP PACK**	ILP Standard Color Paint Chips
☐ **TL7/HVG**[5,7]	Synapse Twist Lock Mesh Network 480V
☐ **TLPC/HV**[4]	347-480V Twist Lock Photocell
☐ **TLPC/UNV**[1,4]	120-277V Twist Lock Photocell

[1] Not available with HV option [2] Option Not DLC qualified
[3] Requires Bluetooth Enabled device for programming (provided by others)
[4] Only Compatible with CR3P and CR7P
[5] Contact Factory for Site Layout, For HV models contact Factory for pricing.
[6] Dimming Leads will be wired to receptacle unless otherwise specified
[7] CR7P Required
[8] Only one control option allowed
[9] Contact factory for pricing and availability
[10] Requires additional Surge Protection (SP1, SP2, SP480V2); For additional details see General Terms and Conditions. Consult Factory for pricing

SKYLINE
AREA LIGHT SERIES

LED SYSTEMS INFO		3000K		4000K		5000K		BUG Rating	Watts[2]	Replaces
Part Numbers	Distribution	Lumens	Efficacy	Lumens	Efficacy	Lumens	Efficacy			
SAS-6L	2	6322	138.0	6655	145.3	6788	148.2	B1-U0-G1	46 W	175W MH
	3	6301	137.6	6633	144.8	6766	147.7	B1-U0-G2		
	4	6234	136.1	6562	143.3	6693	146.1	B1-U0-G1		
	5S	6345	138.5	6679	145.8	6813	148.7	B3-U0-G2		
	FTA	6824	149.0	7183	156.8	7327	160.0	B1-U0-G1		
SAS-9L	2	8941	127.9	9412	134.6	9600	137.3	B1-U0-G2	70 W	250W MH
	3	8912	127.5	9381	134.2	9569	136.9	B2-U0-G2		
	4	8817	126.1	9281	132.8	9467	135.4	B2-U0-G2		
	5S	8973	128.4	9445	135.1	9634	137.8	B4-U0-G2		
	FTA	9650	138.1	10158	145.3	10361	148.2	B1-U0-G1		
SAS-12L	2	12693	154.4	13361	162.5	13628	165.8	B2-U0-G2	82 W	320W MH
	3	12652	153.9	13318	162.0	13584	165.3	B2-U0-G2		
	4	12516	152.3	13175	160.3	13439	163.5	B2-U0-G2		
	5S	12739	155.0	13409	163.1	13677	166.4	B4-U0-G2		
	FTA	13700	166.7	14421	175.4	14709	178.9	B2-U0-G1		
SAS-15L	2	16013	148.1	16856	155.9	17193	159.0	B2-U0-G2	108 W	400W MH
	3	15962	147.7	16802	155.4	17138	158.5	B2-U0-G2		
	4	15791	146.1	16622	153.8	16954	156.8	B2-U0-G2		
	5S	16070	148.7	16916	156.5	17254	159.6	B4-U0-G2		
	FTA	17283	159.9	18193	168.3	18557	171.7	B2-U0-G1		
SAS-18L	2	18245	138.5	19205	145.8	19589	148.7	B3-U0-G2	132 W	400W MH
	3	18186	138.1	19143	145.4	19526	148.3	B3-U0-G3		
	4	17984	136.6	18931	143.7	19310	146.6	B3-U0-G3		
	5S	18310	139.0	19274	146.3	19659	149.3	B5-U0-G3		
	FTA	19692	149.5	20728	157.4	21143	160.5	B2-U0-G1		
SAM-24L	2	23494	142.4	24730	149.9	25225	152.9	B3-U0-G3	165 W	400W MH
	3	23373	141.7	24603	149.1	25095	152.1	B3-U0-G4		
	4	23203	140.6	24424	148.0	24912	151.0	B3-U0-G4		
	5S	23911	144.9	25169	152.5	25672	155.6	B5-U0-G3		
	FTA	23559	142.8	24799	150.3	25295	153.3	B2-U0-G2		
SAM-30L	2	30061	135.0	31643	142.1	32276	144.9	B3-U0-G3	222 W	750W MH
	3	29906	134.3	31480	141.4	32110	144.2	B3-U0-G4		
	4	29688	133.3	31251	140.3	31876	143.1	B3-U0-G4		
	5S	30594	137.4	32204	144.6	32848	147.5	B5-U0-G4		
	FTA	30144	135.4	31730	142.5	32365	145.3	B3-U0-G2		
SAM-36L	2	36547	153.6	38470	161.7	39239	164.9	B3-U0-G3	237 W	750W MH
	3	36357	152.8	38271	160.9	39036	164.1	B3-U0-G5		
	4	34913	146.8	36750	154.5	37485	157.6	B3-U0-G5		
	5S	35977	151.2	37871	159.2	38628	162.4	B5-U0-G4		
	FTA	35448	149.0	37314	156.8	38060	160.0	B3-U0-G2		
SAM-42L	2	39231	141.6	41296	149.0	42122	152.0	B4-U0-G3	277 W	1000W MH
	3	39099	141.1	41157	148.5	41980	151.5	B3-U0-G5		
	4	38885	140.3	40932	147.7	41751	150.7	B3-U0-G5		
	5S	39927	144.1	42028	151.7	42869	154.7	B5-U0-G4		
	FTA	39340	142.0	41410	149.4	42238	152.4	B3-U0-G2		
SAM-50L	2	48196	142.3	50732	149.8	51747	152.8	B4-U0-G4	338.6	1000W MH
	3	48033	141.9	50561	149.3	51573	152.3	B4-U0-G5		
	4	47771	141.1	50285	148.5	51291	151.5	B4-U0-G5		
	5S	49050	144.9	51631	152.5	52664	155.5	B5-U0-G5		
	FTA	48329	142.7	50872	150.2	51890	153.2	B3-U0-G3		

[1]Values are nominal, see IES file for more detail [2]Electrical data at 25C (77F). Actual wattage may differ by +/-10%.

SKYLINE
AREA LIGHT SERIES

EPA RATINGS AND VIBRATION CHART

	SLPF		UMB		UAB		WFM		WAM		TRN		HTM		WEIGHT
SAS	0.53	1.5g	0.47	3g	0.53	3g	0.47	3g	0.53	3g	0.47	1.5g	0.47	3g	11 lbs
SAM	0.71	1.5g	0.64	3g	0.71	3g	0.64	3g	0.71	3g	0.64	1.5g	0.64	3g	22 lbs
WEIGHT	4.5 lbs		2.5 lbs		5.5 lbs		3.0 lbs		6.0 lbs		2.5 lbs		3.5 lbs		

* EPA Ratings listed assume fixture is mounted horizontally. For adjustable mounting options, EPA will vary with selected angle.

TILT DEGREE		0°	30°	45°
 Single	SAS	0.47	1.32	1.72
	SAM	0.64	2.49	3.32
 D180°	SAS	1.03	1.32	1.72
	SAM	1.41	2.49	3.32
 D90°	SAS	0.85	1.58	1.72
	SAM	1.15	2.99	3.32

TILT DEGREE		0°	30°	45°
 T90°	SAS	1.13	1.83	2.39
	SAM	1.54	3.46	4.61
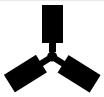 TN120°	SAS	1.22	2.77	3.58
	SAM	1.66	5.23	6.91
 Q90°	SAS	1.13	1.83	2.39
	SAM	1.54	3.46	4.61

*EPA for UMB, WFM, TRN, and HTM mounts

ELECTRICAL DATA (AMPS)

Lumen Package	120V	208V	240V	277V	347V	480V
6L	0.38 A	0.22 A	0.19 A	0.17 A	0.13 A	0.10 A
9L	0.58 A	0.34 A	0.29 A	0.25 A	0.20 A	0.15 A
12L	0.73 A	0.42 A	0.37 A	0.32 A	0.25 A	0.18 A
15L	0.92 A	0.53 A	0.46 A	0.40 A	0.32 A	0.23 A
18L	1.14 A	0.66 A	0.57 A	0.49 A	0.39 A	0.29 A
24L	1.39 A	0.80 A	0.70 A	0.60 A	0.48 A	0.35 A
30L	1.83 A	1.06 A	0.92 A	0.79 A	0.63 A	0.46 A
36L	1.96 A	1.13 A	0.98 A	0.85 A	0.68 A	0.49 A
42L	2.27 A	1.31 A	1.13 A	0.98 A	0.78 A	0.57 A
50L	2.82 A	1.63 A	1.41 A	1.22 A	0.98 A	0.71 A

[1]Electrical data at 25C (77F). Actual wattage may differ by +/-10%.

FIELD ADJUSTABLE OUTPUT DATA (FAO)

Part Number	FAO Position	0	1	2	3	4	5	6	7
SAS-6L-U-40-T4	Input Power (W)	46	40	35	29	24	19	13	8
	Approx Lumens @3000K	6234	5421	4743	3930	3253	2575	1762	1084
	Approx Lumens @4000K	6562	5706	4993	4137	3424	2710	1854	1141
	Approx Lumens @5000K	6693	5820	5093	4220	3492	2765	1892	1164
SAS-9L-U-40-T4	Input Power (W)	70	61	52	44	35	27	19	10
	Approx Lumens @3000K	8817	7683	6550	5542	4409	3401	2393	1260
	Approx Lumens @4000K	9281	8088	6894	5834	4641	3580	2519	1326
	Approx Lumens @5000K	9467	8250	7033	5951	4734	3652	2570	1352
SAS-12L-U-40-T4	Input Power (W)	82	72	61	52	43	33	23	14
	Approx Lumens @3000K	12516	10990	9311	7937	6563	5037	3511	2137
	Approx Lumens @4000K	13175	11568	9801	8355	6909	5302	3695	2249
	Approx Lumens @5000K	13439	11800	9997	8522	7047	5408	3769	2294
SAS-15L-U-40-T4	Input Power (W)	108	95	82	70	57	44	31	18
	Approx Lumens @3000K	15791	13890	11989	10235	8334	6433	4533	2632
	Approx Lumens @4000K	16622	14621	12620	10774	8773	6772	4771	2770
	Approx Lumens @5000K	16954	14913	12872	10989	8948	6907	4866	2826
SAS-18L-U-40-T4	Input Power (W)	132	117	100	85	68	53	37	21
	Approx Lumens @3000K	17984	15940	13624	11581	9264	7221	5041	2861
	Approx Lumens @4000K	18931	16780	14342	12190	9752	7601	5306	3012
	Approx Lumens @5000K	19310	17116	14629	12434	9948	7753	5413	3072
SAM-24L-U-40-T4	Input Power (W)	165	142	123	104	84	64	44	25
	Approx Lumens @3000K	23203	19969	17297	14625	11812	9000	6187	3516
	Approx Lumens @4000K	24424	21019	18207	15395	12434	9474	6513	3701
	Approx Lumens @5000K	24912	21439	18571	15702	12682	9663	6643	3775
SAM-30L-U-40-T4	Input Power (W)	222	196	169	142	115	88	62	34
	Approx Lumens @3000K	29688	26211	22600	18990	15379	11768	8291	4547
	Approx Lumens @4000K	31251	27591	23790	19989	16189	12388	8728	4786
	Approx Lumens @5000K	31876	28143	24266	20389	16512	12636	8902	4882
SAM-36L-U-40-T4	Input Power (W)	237	210	182	154	126	99	71	42
	Approx Lumens @3000K	34913	30936	26811	22686	18561	14584	10459	6187
	Approx Lumens @4000K	36750	32563	28222	23880	19538	15351	11009	6513
	Approx Lumens @5000K	37485	33215	28786	24357	19929	15658	11230	6643
SAM-42L-U-40-T4	Input Power (W)	277	239	207	174	142	109	76	43
	Approx Lumens @3000K	38885	33551	29058	24426	19934	15301	10669	6036
	Approx Lumens @4000K	40932	35317	30588	25712	20983	16107	11230	6354
	Approx Lumens @5000K	41751	36023	31200	26226	21403	16429	11455	6481
SAM-50L-U-40-T4	Input Power (W)	339	292	253	213	174	133	93	53
	Approx Lumens @3000K	47771	41148	35652	30015	24520	18742	13105	7469
	Approx Lumens @4000K	50285	43313	37528	31595	25810	19728	13795	7862
	Approx Lumens @5000K	51291	44180	38279	32227	26326	20123	14071	8019

SPECIFICATIONS

CONSTRUCTION
The Skyline series features a slim profile die-cast aluminum housing available in 2 different sizes for a fully scalable solution. The versatile 9 optional mounting methods allow for easy installation while the hinged door allows for quick drop-down driver access for maintenance. The standard Keyhole / slotted UMB mounting bracket allows for a “no-drilling” 1-man installation by mounting the UMB on existing pole drillings and the luminaire head onto the UMB, substantially reducing installation labor. The fully gasketed housing is IP66 rated for whole luminaire ingress protection against moisture and environmental contaminants. The Skyline’s low-profile design results in a low EPA, allowing pole optimization to thinner or smaller size pole shafts. Vibration rated per ANSI C136.31 on all mountings (see table Above). The Skyline Series is protected with a durable bronze polyester powder coat finish to withstand extreme weather changes without cracking or peeling.

OPTICS
The IP66 silicone gasket sealed optical chamber utilizes proprietary polycarbonate refractive optics to provide exceptional coverage and uniformity in factory rotatable IES Types 2, 3, 4, 5S (Square) or FTA (Forward Throw Automotive). Polycarbonate optics are impact resistant and UV stabilized for maximum longevity. Available in 5000K, 4000K, and 3000K, color temperatures per ANSI C78.377. Minimum CRI of 70. The optical integrated House side shield (HSS) option allows for improved backlight control without any large shields taking away from the site. The Skyline series produces Zero uplight and is IDA listed in 3000K color temperature. Optional field installed 3-sided glare shield accessory is available for on-site external house side protection.

ELECTRICAL
Class 1 High-performance drivers features over-voltage, under-voltage, short circuit and over temperature protection. 0-10V dimming (10% - 100%) standard. Standard Universal Voltage (120-277 Vac) Input 50/60 Hz or optional High Voltage (347-480 Vac). L80 >100,000 hrs. in accordance with IESNA TM-21-19 projected values at 25°C Ambient temperature. Total harmonic distortion: <20%. Power factor: >0.90. Input power stays constant over life. Minimum 6kV surge rating meets a minimum Category C Low operation (per ANSI/IEEE C62.41.2). Additional protection is available in 10kV and 20kV options.

THERMAL
The Skyline Series features an array of High-efficacy LED's mounted on a metal core circuit board. The LED boards are mounted directly to the cast aluminum housing with heat dissipating fins to provide excellent thermal performance extending the life of electronic components. Operating Ambient Temperature: -40°C to +50°C (-40°F to 122°F) 50L Lumen –– Package: -40°C to +45°C (-40°F to 113°F).

INSTALLATION
The versatile Skyline series comes with 9 optional mounting methods. The standard keyhole / slotted universal mounting bracket (UMB) allows for a “no-drilling” 1-man installation by mounting the UMB on existing pole drillings and the luminaire head onto the UMB, substantially reducing installation labor. The 3G rated UMB quick mount allows for pole mounting onto square 4-6" poles with a vertical mounting pattern between 2"-5" and the UMB/R adds additional mounting capability to any round pole 3"-6" in diameter. The 3G rated universal adjustable mount (UAB) model adds full range tilting to the standard UMB fixed model. The 3G rated wall fixed mount (WFM) allows for easy installation to any vertical wall surface or J-box. The optional 3G rated wall adjustable mount (WAM) adds full range wall mount tilting. The 3G rated horizontal mast arm (HTM) mount is designed for straight horizontal 2"(2-3/8" OD) mast arms. The 1.5G rated adjustable slip fitter (SLPF) mounts to any vertical or horizontal tenon 2" pipe (2-3/8" OD) allowing for full range tilting.

The 3G rated wall fixed mount (WFM) allows for easy installation to any vertical wall surface or J-box. The optional 3G rated wall adjustable mount (WAM) adds full range wall mount tilting. The 3G rated horizontal mast arm (HMA) mount is designed for straight horizontal 2"(2-3/8" OD) mast arms. The 1.5G rated adjustable slip fitter (SLPF) mounts to any vertical or horizontal tenon 2" pipe (2-3/8" OD) allowing for full range tilting.

The trunnion/yoke bracket (TRN) enables the Skyline to be used for general flood applications with full range tilting as required.
All mounting methods are provided with a 3-wire 3' outdoor rated cord is provided for wiring. 5-wire cord optional for external dimming, consult factory. See charts above for all vibration, weight, and EPA results.

CONTROLS
Standalone Controls:
Factory installed 3-Pin & 7-Pin ANSI C136.41 Control Receptacle Options available. Dusk to Dawn twist lock photocells sold separately (See accessories). Optional PIR sensors available installed in housing hinged door. Sensors provide optional on/off control, photocell capability, bi-level dimming, high-end trim, and bluetooth configuration allows for on-site modifications.

Wireless Control Systems:
The Skyline Series is wireless mesh controls ready with Synapse, Enlighted, and Leviton Bluetooth Mesh wireless control platforms. Available with and without PIR sensors. Inquire with factory for more information or for additional controls options, including customer supplied items.

WARRANTY
5 Year Warranty Standard; 10 Year Warranty Optional (Terms and Conditions apply).

CERTIFICATIONS
ETL Listed for wet locations. Tested in accordance with IESNA LM-79 and LM-80 standards. BAA compliant. RoHS Compliant. Title 24 Compliant; see local ordinance for qualification information. IP66 rated Luminaire per IEC 60598. IP66 rated optical chamber. ASTM B117 Salt Spray Tested 500 Hrs.

DLC Premium Listed Product, Not all versions of this product may be DLC Premium qualified. Please check the DLC Qualified Products List at www.designlights.org/QPL to confirm which versions are qualified.

SKYLINE
AREA LIGHT SERIES

BASIC

FAO
Internal bi-level switch offers adjustable light levels for greater flexibility within one product. Utilizes 0-10V dimming wires and cannot be combined with other sensor or control options.

CRxP
3-Pin or 7-pin ANSI C136.41-2013 control receptacle option available for NEMA twist lock photocontrols or wireless control modules. Control accessories sold separately. Dimming leads from the receptacle will be connected to the driver dimming leads (Consult factory for alternate wiring). x = Number of pins (3 or 7).

FSP-311/Ly - FSP-321/Ly
Optional Bluetooth Programmable PIR sensor allows for Continuous Dimming, Motion and/ or daylight harvesting, Fully adjustable high/low dimmed light levels, and Adjustable time delay/ cutoff delay. The sensor is programmed via a free iOS® or Android® Sensor Configuration App (compatible device provided by others). Available in 10'-20' or 20'-40' mounting lenses. See coverage patterns below, L7=20'-40', L3=20'-40'.

Default Settings:
- High Mode: 100% Output
- Low Mode: 10% Output
- Time Delay: 5 mins
- Cutoff: 1 hr
- Sensitivity: High
- Photocell: Disabled
- Continuous Dimming: Disabled

ADVANCED

Synapse (SYN or TL7)
Utilizing a robust 2.4 GHz Self-Healing Mesh Network, Synapse provides flexibility and scalability making it a perfect outdoor solution for both new construction and retrofit projects. The easy-to-use web application is accessible on any device with an internet connection and allows for complete customization of the system and its features. Integral radio (SYN) includes (2) 24V inputs for a Wattstopper sensor or twist lock photocell into the wireless lighting system. External radio (TL7) includes (1) low voltage input for a Wattstopper sensor, available in both universal(120-277V) or high voltage (480V). Sensors available in 20' or 40' mounting lenses. See coverage patterns below. Sensor mounted on hinged driver cover. Antenna exits side of luminaire for maximum connectivity.

Enlighted
Enlighted's three-tier, over-the-air upgradeable wireless control platforms provide out-of-the-box compliance with energy use regulations. The comprehensive capabilities of the sensor include vacancy detection, daylight harvesting, demand response, and energy savings reporting. Enlighted's enterprise system allows for easy integration of indoor and outdoor lighting with building management systems for site-wide IOT management. Enlighted ruggedized sensor mounted on hinged driver cover.

· **Enlighted One (SU/5S/LR/IL)**
-Fixtures are controlled based on occupancy and ambient light. Includes ability to group fixtures together and connect to a switch to zone fixtures for group operation.
· **Enlighted Connected (SU/5S/LR/CL)**
-Fixtures are controlled based on occupancy & ambient light. Includes individual lighting control plus connection to Enlighted Energy Manager. The Energy Manager provides data analysis for all data collected by the Enlighted Smart Sensors for energy, occupancy & environment.
· **Enlighted IOT (SU/5S/LR/IOT)**
-Fixtures are controlled based on occupancy and ambient light. Includes individual lighting control plus connection to Enlighted Energy Manager. The Energy Manager provides data analysis for all data collected by Enlighted Smart Sensors for energy, occupancy & environment. Additionally, the IOT functionality takes the data access and function beyond just lighting to a wide range of applications beyond the standard connected lighting controls.

Leviton ZLD1Z
Optional Bluetooth Groupable PIR sensor that allows for Programmable Options such as, Continuous Dimming, Motion and/ or daylight harvesting, fully adjustable high/ low dimmed light levels, and Adjustable time delay/ cutoff delay. The sensor is programmed via a free iOS® or Android® Sensor Configuration App (compatible device provided by others). Sensor Mesh Grouping allows for 16 devices per group, with both Occupancy and Daylight Control. Recommended spacing < 100'. Comes standard with both 8'-20' or 20'-40' mounting lenses. See coverage patterns on page 6..

Default Settings:
- High Mode: 100% Output
- Auto-ON/Auto-OFF with 20-minute timeout
- Sensitivity: High
- Daylight Harvesting: Enabled

COVERAGE PATTERNS

SYNS/L2 and FSP-311/Ly - FSP-321/Ly

Top View

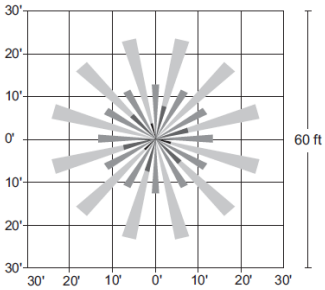

Side View

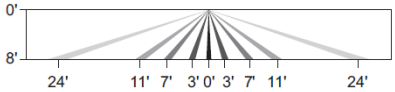

SYNS/L3 and FSP-311/Ly - FSP-321/Ly

Top View

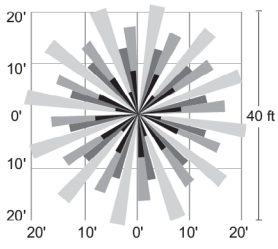

Side View

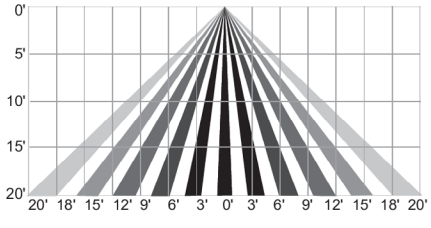

SYNS/L7 and FSP-311/Ly - FSP-321/Ly

Top View

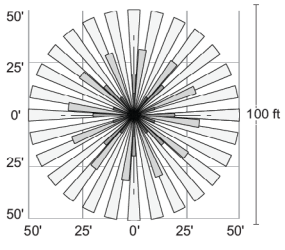

Side View

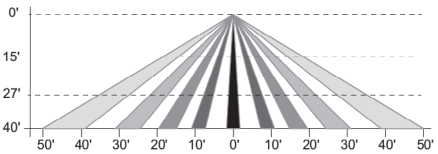

SKYLINE
AREA LIGHT SERIES

COVERAGE PATTERNS
Leviton Low Mount

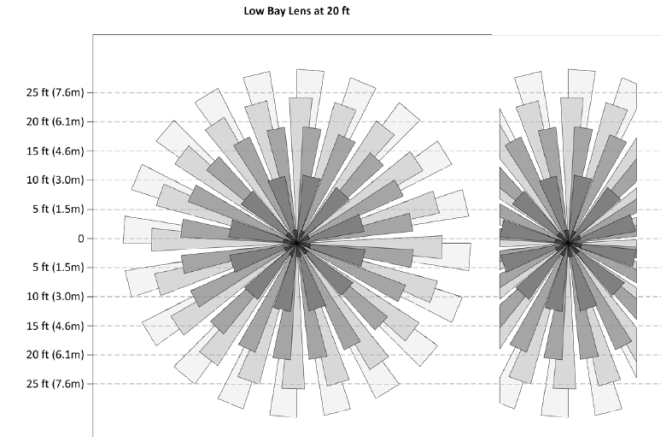

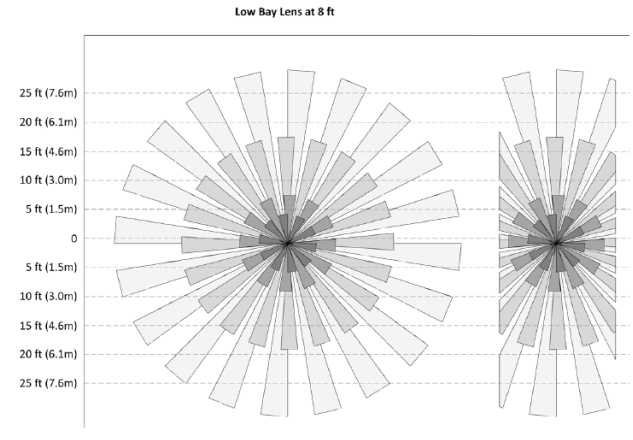

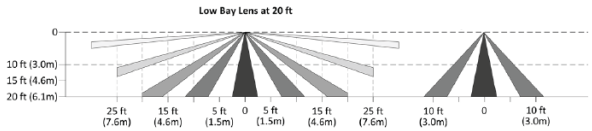

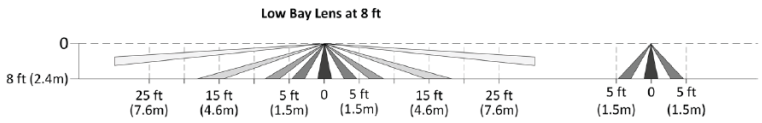

Leviton High Mount

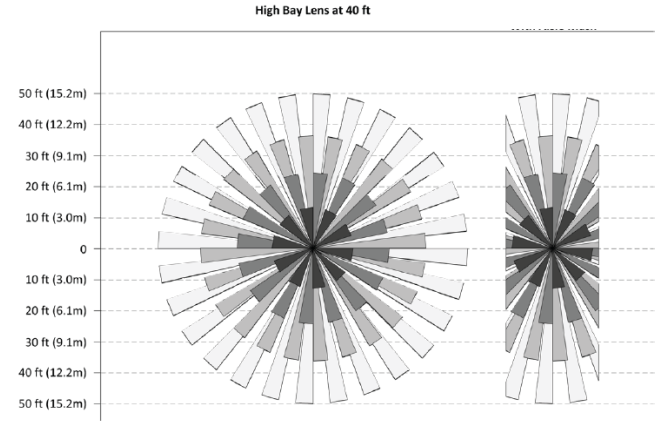

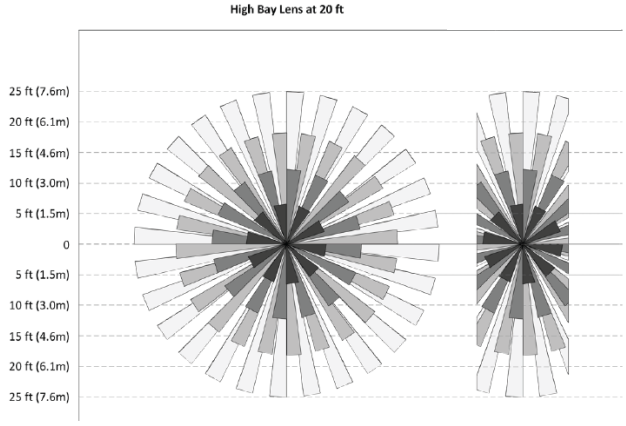

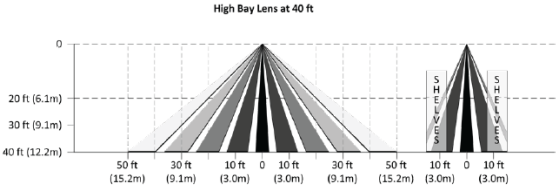

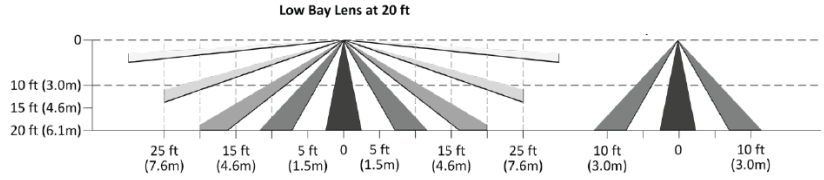

BACK LIGHT CONTROL OPTIONS



HSS
Integral House Side Shield
Delivers backlight control that significantly reduces light spill behind the pole for applications with pole locations close to adjacent properties. Shown with Medium housing . HSS rotates with optic distribution.



GS
External Glare Shield
Rotatable 3-sided field installable external glare shield. Shown with Medium housing

SKYLINE
AREA LIGHT SERIES

LINE DRAWINGS

SAS Universal Mounting Bracket (UMB)

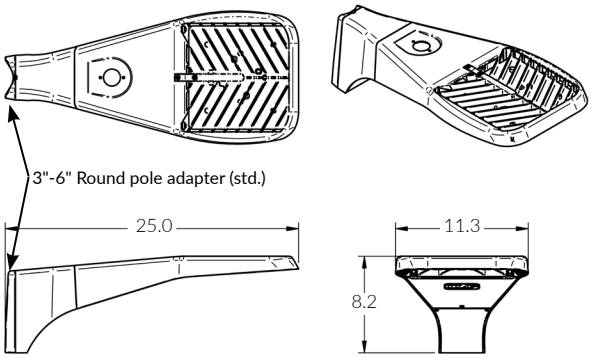

UMB/UAB Mounting Detail

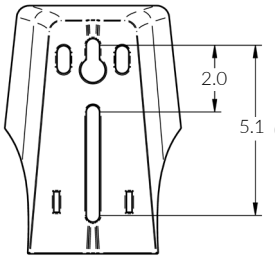

SAS Universal Adjustable Mount Bracket (UAB)

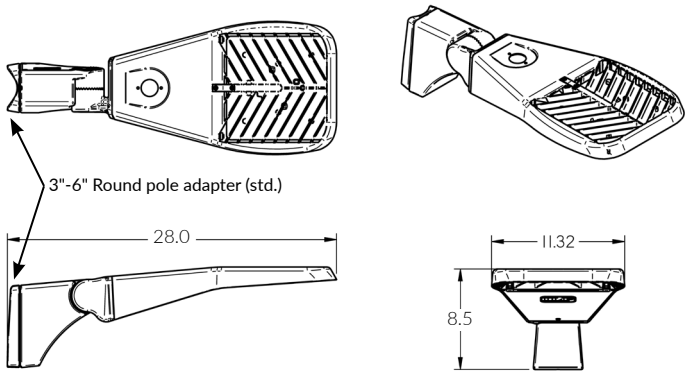

SAS Adjustable Slip Fitter (SLPF)

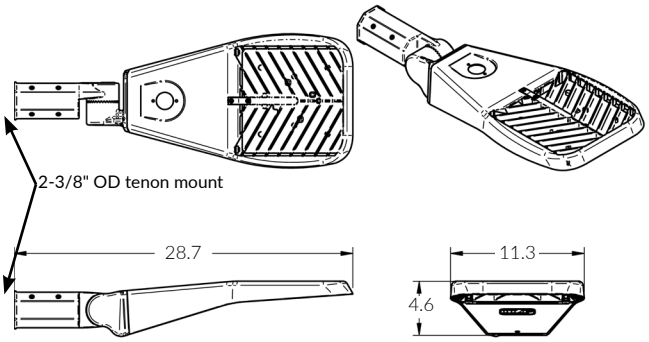

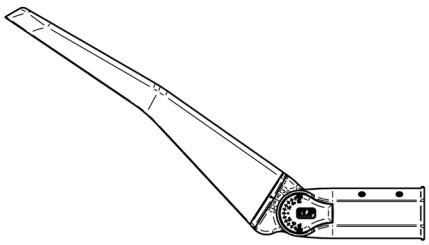

SAS Horizontal Tenon Mount (HTM)

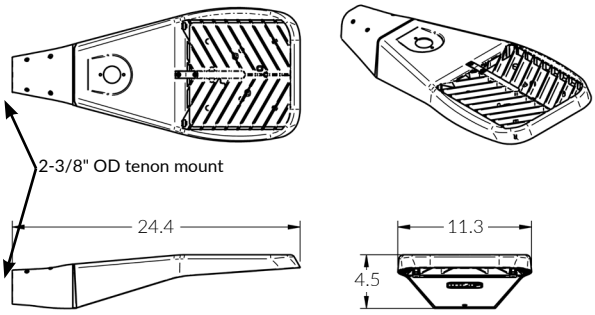

SKYLINE
AREA LIGHT SERIES

SAS Wall Fixed Mount (WFM)

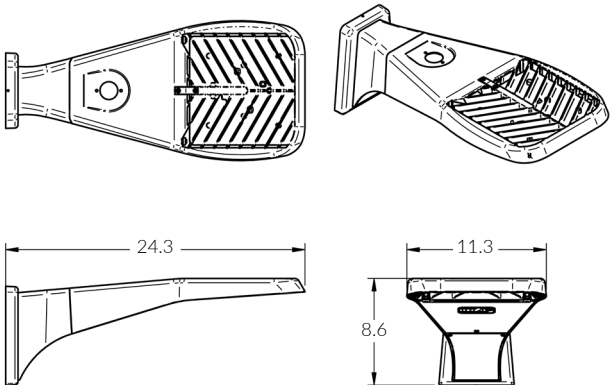

WFM/WAM Mounting Detail

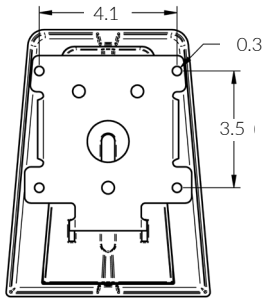

SAS Wall Adjustable Mount Bracket (WAM)

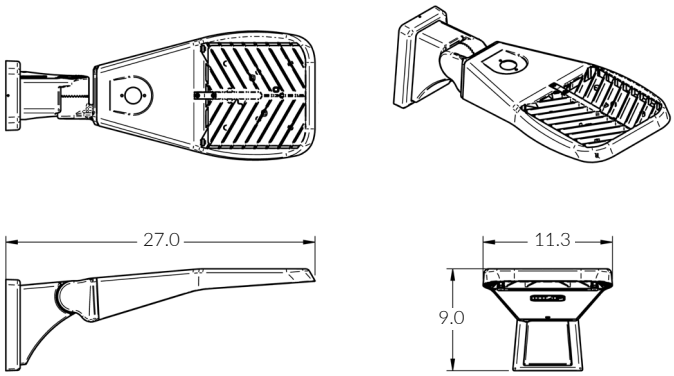

SAS Trunnion Mount (TRN)

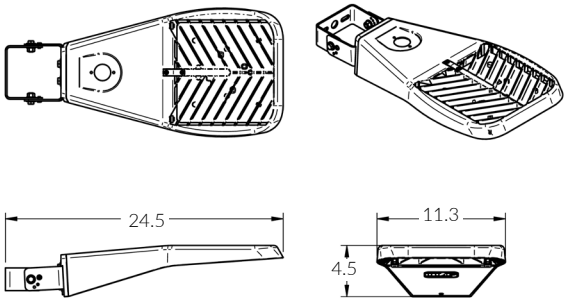

Trunnion Mounting Detail

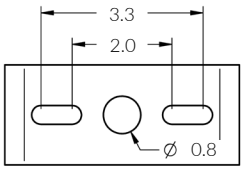

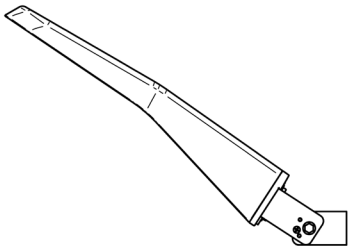

SAM Universal Mounting Bracket (UMB)

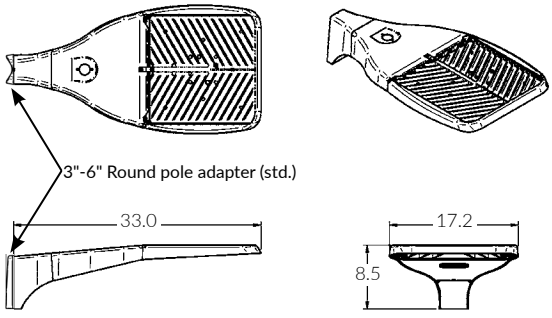

UMB/UAB Mounting Detail

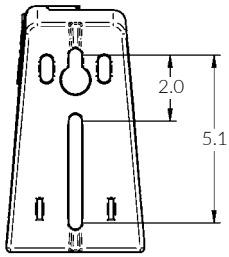

SKYLINE
AREA LIGHT SERIES

SAM Universal Adjustable Mount Bracket (UAB)

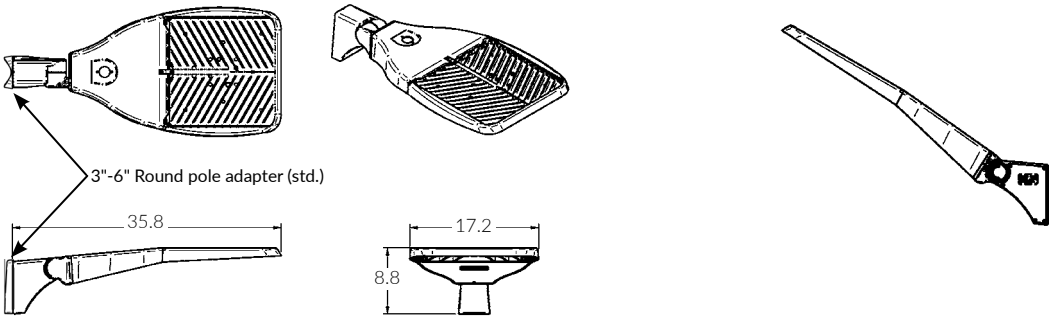

SAM Adjustable Slip Fitter (SLPF)

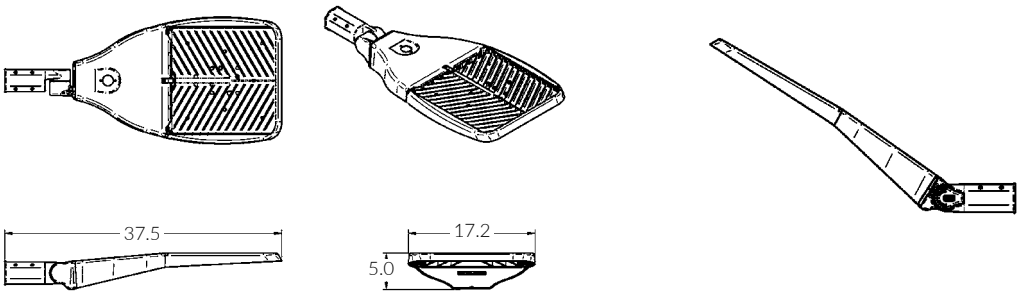

SAM Horizontal Tenon Mount (HTM)

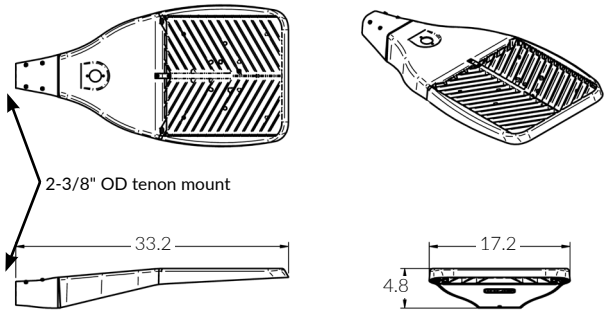

SAM Wall Fixed Mount (WFM)

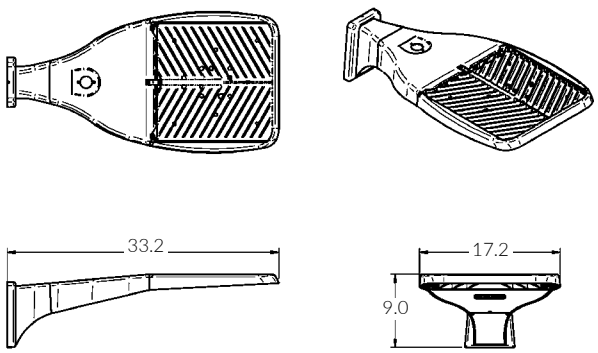

WFM/WAM Mounting Detail

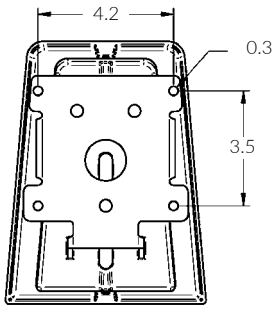

SKYLINE
AREA LIGHT SERIES

SAM Wall Adjustable Mount Bracket WAM

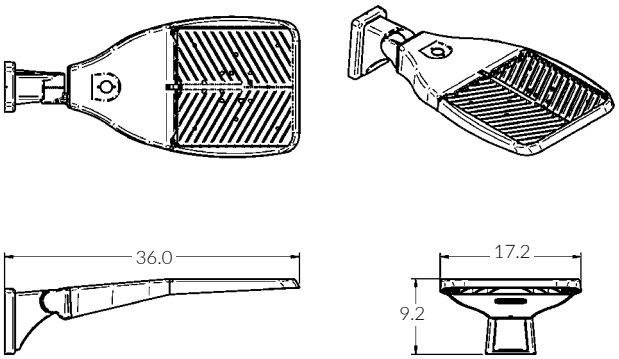

SAM Trunnion Mount (TRN)

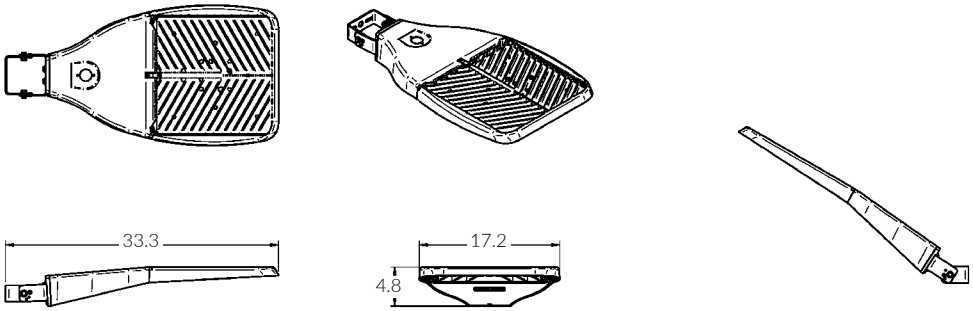

OPTICS ORIENTATION

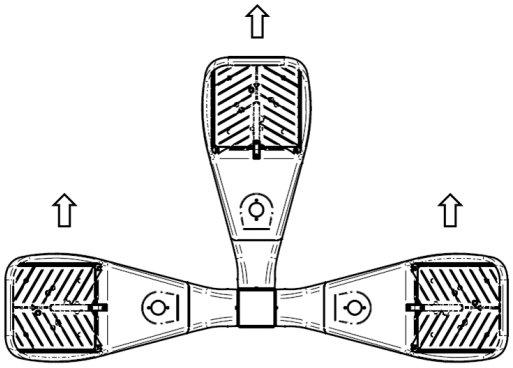

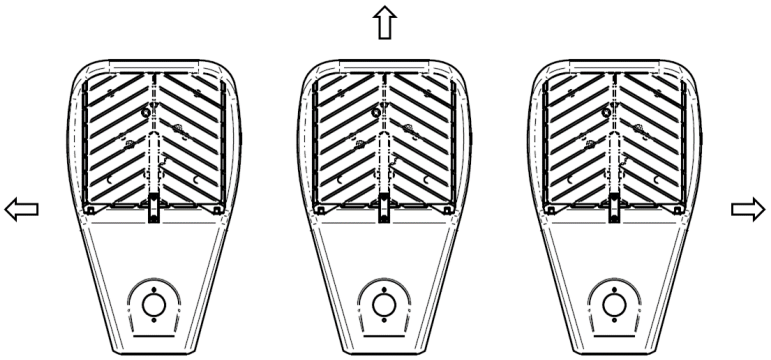

FACTORY SELECT FINISH GUIDE

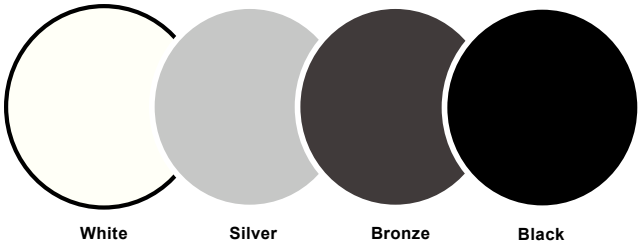

COLOR NAME AND DESCRIPTION	PRICING
WHT - ILP White	Standard
SLV - ILP Silver	Standard
BRZ - ILP Bronze	Standard
BLK - ILP Black	Standard

COLORS SHOWN ABOVE ARE TO BE USED AS REFERENCE, NOT EXACT MATCH. PLEASE REQUEST PAINT CHIPS FOR EXACT MATCH.

PHOTOMETRIC REPORTS

Photometric values based upon tests performed in compliance with LM-79. IES files can be downloaded at www.ilp-inc.com

FTA

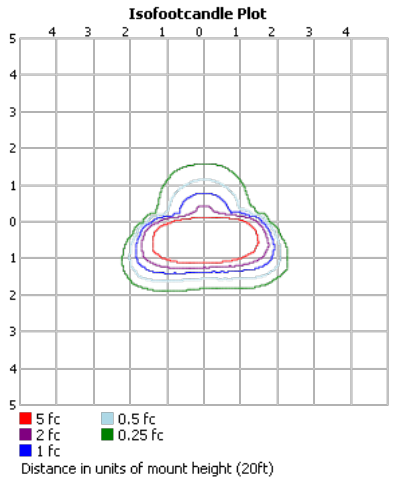

T2

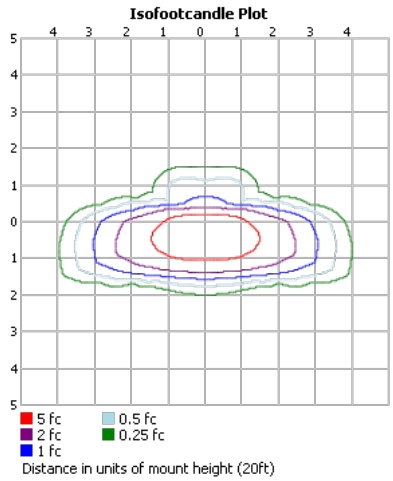

T3

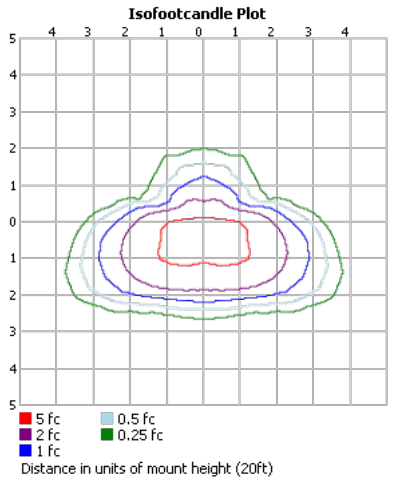

T4

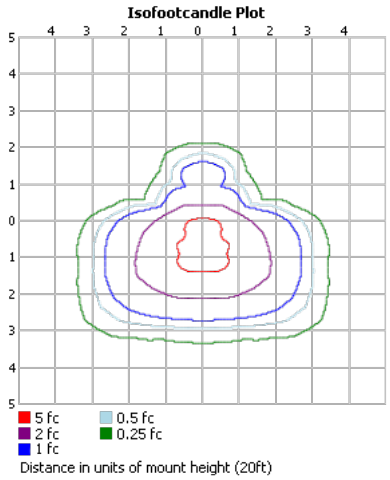

T5S

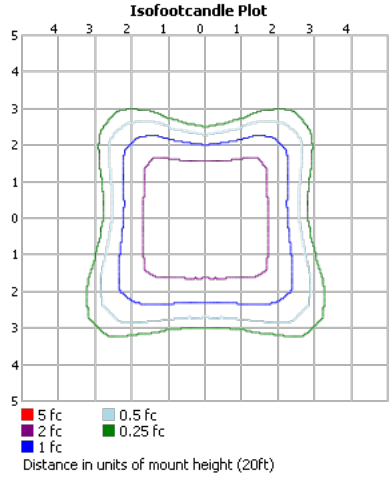

Project Name:	Part Number: SAS-15L-U-30-T2-UMB-BRZ	Type: A1

SKYLINE

AREA LIGHT SERIES



* Shown with UMB Mounting

ILP
407-478-3759
www.ilp-inc.com

Product Overview

SCAN ME

FEATURES

- Specification Grade die-cast aluminum housing
- Bronze polyester powder coat finish (standard)
- Custom and factory select colors available
- 5 Optical Distributions with Highest Uniformity in their product class
- Factory Rotatable Type 2, 3, 4, 5 Square, & Automotive Front Row Optics
- Optional Spill Light Control Integral Shield (HSS)
- Universal Quick Pole Mount Allows for 1 man installation on existing poles with no drilling required
- 9 Different Optional Mounting Methods (3G Rated)[3]
- Single Fastener hinged door driver access
- 120–277V Universal Voltage or 347–480V High Voltage
- 0–10V Dimmable Driver (std.)
- PIR Occupancy, Photocell, & Bi-Level Dimming Sensors Available
- 3-Pin & 7-Pin ANSI C136.41 Control Receptacle Options
- Wireless control integrated luminaire
- 3000K, 4000K & 5000K CCT
- >70 Color Rendering Index (CRI)
- Calculated L80 >100,000 hrs @ 25°C per TM-21-11
- IP66 Rated Luminaire
- Dark Sky Compliant[1,2]
- 5 Year Warranty; 10 Year Optional Warranty[4]
- ETL Listed for Wet Locations
- DesignLights Consortium® Premium Qualified Luminaire

[1] 3000K is IDA Listed [2] Must select UMB, WFM, or HTM mounting options to qualify
[3] TRN & SLPF 1.5G Rated [4] Requires additional Surge Protection (SP1, SP2, SP480V2); For additional details see General Terms and Conditions

SUITABLE APPLICATIONS

- Parking Lots
- Parking Structure
- Parks
- Education
- Hospitals
- Car Dealerships
- Roadways
- Shopping Centers

ORDERING GUIDE

SERIES	LUMENS	VOLTAGE	CCT	DISTRIBUTION	ORIENTATION	MOUNTING	FINISH	WARRANTY
☑ **SAS** Small	☐ **6L** 6,000 lm	☑ **U** 120-277v	☑ **30** 3000K	☑ **T2** T2 - Type 2	☑ (Blank) - Standard	☐ **SLPF** Adjustable Slip Fitter	☑ **BRZ**	☑ **(Blank)** 5YR
	☐ **9L** 9,000 lm	☐ **HV** 347-480v	☐ **40** 4000K	☐ **T3** T3 - Type 3	☐ **L** Optics Rotated Left	☑ **UMB** Universal Fixed	☐ **BLK**	☐ **10YR**[10] 10YR
	☐ **12L** 12,000 lm		☐ **50** 5000K	☐ **T4** T4 - Type 4	☐ **R** Optics Rotated Right	☐ **UMB/R** Universal Mount Sqr/ Rnd pole 3"-6"	☐ **WHT**	
	☑ **15L** 15,000 lm			☐ **T5S** Type 5 Square		☐ **UAB** Universal Adjustable	☐ **SLV**	
	☐ **18L** 18,000 lm			☐ **FTA** Forward Throw Automotive		☐ **UAB/R** Universal Adjustable Sqr/Rnd pole 3"-6"	☐ **RALxxxx** [9]	
						☐ **WFM** Wall Fixed Mount		
☐ **SAM** Med	☐ **24L** 24,000 lm					☐ **WAM** Wall Adjustable Mount		
	☐ **30L** 30,000 lm					☐ **TRN** Trunnion Mount		
	☐ **36L** 36,000 lm					☐ **HTM** Horizontal Tenon Mount		
	☐ **42L** 42,000 lm							
	☐ **50L** 50,000 lm							

BASIC CONTROLS

☐ **(Blank)**	None
☐ **FAO**[1,8]	Field Adjustable Output
☐ **CR3P**[8]	3-Pin NEMA Control receptacle
☐ **CR7P**[6,8]	7-Pin NEMA Control receptacle
☐ **FSP-311/LX**[1,3,8]	Legrand FSP-311 120-277V Sensor (X = Mounting Height 3=10-20', 7=20-40')
☐ **FSP-321/LX**[3,8]	Legrand FSP-321 347-480V Sensor (X = Mounting Height 3=10-20', 7=20-40')
☐ **CR3P/FAO**[8]	Universal 3-Pin control receptacle (See acc. for photocells) with Field Adjustable Output - 7 level selection connected to 0-10V dimming wires
☐ **CR7P/FSP/Lx**[8]	Universal 7-Pin control receptacle with FSP Sensor (X= Mounting Height, 3=20', 7=40') (Controls provided by others)

ADVANCED CONTROLS

☐ **(Blank)**	None
☐ **SYN**[5,8]	Synapse Control System
☐ **SYNS/LX**[5,8]	Synapse Control System w/ Sensor (X = Mounting Height 3=10-20', 7=20-40')
☐ **SU/5S/LR/IL**[1,8]	Enlighted 5S Individual Lighting (IL) Sensor with Control Unit
☐ **SU/5S/LR/CL**[1,8]	Enlighted 5S Connected Lighting (CL) Sensor with Control Unit
☐ **SU/5S/LR/IOT**[1,8]	Enlighted 5S Internet of Things (IOT) Sensor with Control Unit
☐ **ZLD1Z**[1,3,8]	Leviton ZLD1Z 120-277V Bluetooth Groupable Sensor (16 Devices) with 8-20' & 20-40' lens included

OPTIONS - FACTORY INSTALLED

☐ **(Blank)**	None
☐ **SP1**[1]	10kA Surge Protection Device
☐ **SP2**[1]	20kA Surge Protection Device
☐ **SP1HV**	10kA Max 480V Surge Protector
☐ **SP480V2**	20kA Max 480V Surge Protector
☐ **HSS**[2]	Rotatable House Side Shield
☐ **FUSE/SXXX**	FUSE 120V, 277V, 347V (x= voltage)
☐ **FUSE/DXXX**	FUSE 208V, 240V, 480V (x= voltage)

ACCESSORIES

☐ **SAx/BIRD**	Bird Spikes (x= fixture size)
☐ **SAx/GS**[2]	Rotatable Glare Shield (x= fixture size)
☐ **TL7/B2**[1,5,7]	Synapse Twist Lock Mesh Network 120-277V
☐ **ILP PAINT CHIP PACK**	ILP Standard Color Paint Chips
☐ **TL7/HVG**[5,7]	Synapse Twist Lock Mesh Network 480V
☐ **TLPC/HV**[4]	347-480V Twist Lock Photocell
☐ **TLPC/UNV**[1,4]	120-277V Twist Lock Photocell

[1] Not available with HV option [2] Option Not DLC qualified
[3] Requires Bluetooth Enabled device for programming (provided by others)
[4] Only Compatible with CR3P and CR7P
[5] Contact Factory for Site Layout, For HV models contact Factory for pricing.
[6] Dimming Leads will be wired to receptacle unless otherwise specified
[7] CR7P Required
[8] Only one control option allowed
[9] Contact factory for pricing and availability
[10] Requires additional Surge Protection (SP1, SP2, SP480V2); For additional details see General Terms and Conditions. Consult Factory for pricing

SKYLINE
AREA LIGHT SERIES

LED SYSTEMS INFO		3000K		4000K		5000K		BUG Rating	Watts[2]	Replaces
Part Numbers	Distribution	Lumens	Efficacy	Lumens	Efficacy	Lumens	Efficacy			
SAS-6L	2	6322	138.0	6655	145.3	6788	148.2	B1-U0-G1	46 W	175W MH
	3	6301	137.6	6633	144.8	6766	147.7	B1-U0-G2		
	4	6234	136.1	6562	143.3	6693	146.1	B1-U0-G1		
	5S	6345	138.5	6679	145.8	6813	148.7	B3-U0-G2		
	FTA	6824	149.0	7183	156.8	7327	160.0	B1-U0-G1		
SAS-9L	2	8941	127.9	9412	134.6	9600	137.3	B1-U0-G2	70 W	250W MH
	3	8912	127.5	9381	134.2	9569	136.9	B2-U0-G2		
	4	8817	126.1	9281	132.8	9467	135.4	B2-U0-G2		
	5S	8973	128.4	9445	135.1	9634	137.8	B4-U0-G2		
	FTA	9650	138.1	10158	145.3	10361	148.2	B1-U0-G1		
SAS-12L	2	12693	154.4	13361	162.5	13628	165.8	B2-U0-G2	82 W	320W MH
	3	12652	153.9	13318	162.0	13584	165.3	B2-U0-G2		
	4	12516	152.3	13175	160.3	13439	163.5	B2-U0-G2		
	5S	12739	155.0	13409	163.1	13677	166.4	B4-U0-G2		
	FTA	13700	166.7	14421	175.4	14709	178.9	B2-U0-G1		
SAS-15L	2	16013	148.1	16856	155.9	17193	159.0	B2-U0-G2	108 W	400W MH
	3	15962	147.7	16802	155.4	17138	158.5	B2-U0-G2		
	4	15791	146.1	16622	153.8	16954	156.8	B2-U0-G2		
	5S	16070	148.7	16916	156.5	17254	159.6	B4-U0-G2		
	FTA	17283	159.9	18193	168.3	18557	171.7	B2-U0-G1		
SAS-18L	2	18245	138.5	19205	145.8	19589	148.7	B3-U0-G2	132 W	400W MH
	3	18186	138.1	19143	145.4	19526	148.3	B3-U0-G3		
	4	17984	136.6	18931	143.7	19310	146.6	B3-U0-G3		
	5S	18310	139.0	19274	146.3	19659	149.3	B5-U0-G3		
	FTA	19692	149.5	20728	157.4	21143	160.5	B2-U0-G1		
SAM-24L	2	23494	142.4	24730	149.9	25225	152.9	B3-U0-G3	165 W	400W MH
	3	23373	141.7	24603	149.1	25095	152.1	B3-U0-G4		
	4	23203	140.6	24424	148.0	24912	151.0	B3-U0-G4		
	5S	23911	144.9	25169	152.5	25672	155.6	B5-U0-G3		
	FTA	23559	142.8	24799	150.3	25295	153.3	B2-U0-G2		
SAM-30L	2	30061	135.0	31643	142.1	32276	144.9	B3-U0-G3	222 W	750W MH
	3	29906	134.3	31480	141.4	32110	144.2	B3-U0-G4		
	4	29688	133.3	31251	140.3	31876	143.1	B3-U0-G4		
	5S	30594	137.4	32204	144.6	32848	147.5	B5-U0-G4		
	FTA	30144	135.4	31730	142.5	32365	145.3	B3-U0-G2		
SAM-36L	2	36547	153.6	38470	161.7	39239	164.9	B3-U0-G3	237 W	750W MH
	3	36357	152.8	38271	160.9	39036	164.1	B3-U0-G5		
	4	34913	146.8	36750	154.5	37485	157.6	B3-U0-G5		
	5S	35977	151.2	37871	159.2	38628	162.4	B5-U0-G4		
	FTA	35448	149.0	37314	156.8	38060	160.0	B3-U0-G2		
SAM-42L	2	39231	141.6	41296	149.0	42122	152.0	B4-U0-G3	277 W	1000W MH
	3	39099	141.1	41157	148.5	41980	151.5	B3-U0-G5		
	4	38885	140.3	40932	147.7	41751	150.7	B3-U0-G5		
	5S	39927	144.1	42028	151.7	42869	154.7	B5-U0-G4		
	FTA	39340	142.0	41410	149.4	42238	152.4	B3-U0-G2		
SAM-50L	2	48196	142.3	50732	149.8	51747	152.8	B4-U0-G4	338.6	1000W MH
	3	48033	141.9	50561	149.3	51573	152.3	B4-U0-G5		
	4	47771	141.1	50285	148.5	51291	151.5	B4-U0-G5		
	5S	49050	144.9	51631	152.5	52664	155.5	B5-U0-G5		
	FTA	48329	142.7	50872	150.2	51890	153.2	B3-U0-G3		

[1]Values are nominal, see IES file for more detail [2]Electrical data at 25C (77F). Actual wattage may differ by +/-10%.

SKYLINE
AREA LIGHT SERIES

EPA RATINGS AND VIBRATION CHART

	SLPF		UMB		UAB		WFM		WAM		TRN		HTM		WEIGHT
SAS	0.53	1.5g	0.47	3g	0.53	3g	0.47	3g	0.53	3g	0.47	1.5g	0.47	3g	11 lbs
SAM	0.71	1.5g	0.64	3g	0.71	3g	0.64	3g	0.71	3g	0.64	1.5g	0.64	3g	22 lbs
WEIGHT	4.5 lbs		2.5 lbs		5.5 lbs		3.0 lbs		6.0 lbs		2.5 lbs		3.5 lbs		

* EPA Ratings listed assume fixture is mounted horizontally. For adjustable mounting options, EPA will vary with selected angle.

TILT DEGREE		0°	30°	45°
 Single	SAS	0.47	1.32	1.72
	SAM	0.64	2.49	3.32
 D180°	SAS	1.03	1.32	1.72
	SAM	1.41	2.49	3.32
 D90°	SAS	0.85	1.58	1.72
	SAM	1.15	2.99	3.32

TILT DEGREE		0°	30°	45°
 T90°	SAS	1.13	1.83	2.39
	SAM	1.54	3.46	4.61
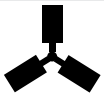 TN120°	SAS	1.22	2.77	3.58
	SAM	1.66	5.23	6.91
 Q90°	SAS	1.13	1.83	2.39
	SAM	1.54	3.46	4.61

*EPA for UMB, WFM, TRN, and HTM mounts

ELECTRICAL DATA (AMPS)

Lumen Package	120V	208V	240V	277V	347V	480V
6L	0.38 A	0.22 A	0.19 A	0.17 A	0.13 A	0.10 A
9L	0.58 A	0.34 A	0.29 A	0.25 A	0.20 A	0.15 A
12L	0.73 A	0.42 A	0.37 A	0.32 A	0.25 A	0.18 A
15L	0.92 A	0.53 A	0.46 A	0.40 A	0.32 A	0.23 A
18L	1.14 A	0.66 A	0.57 A	0.49 A	0.39 A	0.29 A
24L	1.39 A	0.80 A	0.70 A	0.60 A	0.48 A	0.35 A
30L	1.83 A	1.06 A	0.92 A	0.79 A	0.63 A	0.46 A
36L	1.96 A	1.13 A	0.98 A	0.85 A	0.68 A	0.49 A
42L	2.27 A	1.31 A	1.13 A	0.98 A	0.78 A	0.57 A
50L	2.82 A	1.63 A	1.41 A	1.22 A	0.98 A	0.71 A

[1]Electrical data at 25C (77F). Actual wattage may differ by +/-10%.

FIELD ADJUSTABLE OUTPUT DATA (FAO)

Part Number	FAO Position	0	1	2	3	4	5	6	7
SAS-6L-U-40-T4	Input Power (W)	46	40	35	29	24	19	13	8
	Approx Lumens @3000K	6234	5421	4743	3930	3253	2575	1762	1084
	Approx Lumens @4000K	6562	5706	4993	4137	3424	2710	1854	1141
	Approx Lumens @5000K	6693	5820	5093	4220	3492	2765	1892	1164
SAS-9L-U-40-T4	Input Power (W)	70	61	52	44	35	27	19	10
	Approx Lumens @3000K	8817	7683	6550	5542	4409	3401	2393	1260
	Approx Lumens @4000K	9281	8088	6894	5834	4641	3580	2519	1326
	Approx Lumens @5000K	9467	8250	7033	5951	4734	3652	2570	1352
SAS-12L-U-40-T4	Input Power (W)	82	72	61	52	43	33	23	14
	Approx Lumens @3000K	12516	10990	9311	7937	6563	5037	3511	2137
	Approx Lumens @4000K	13175	11568	9801	8355	6909	5302	3695	2249
	Approx Lumens @5000K	13439	11800	9997	8522	7047	5408	3769	2294
SAS-15L-U-40-T4	Input Power (W)	108	95	82	70	57	44	31	18
	Approx Lumens @3000K	15791	13890	11989	10235	8334	6433	4533	2632
	Approx Lumens @4000K	16622	14621	12620	10774	8773	6772	4771	2770
	Approx Lumens @5000K	16954	14913	12872	10989	8948	6907	4866	2826
SAS-18L-U-40-T4	Input Power (W)	132	117	100	85	68	53	37	21
	Approx Lumens @3000K	17984	15940	13624	11581	9264	7221	5041	2861
	Approx Lumens @4000K	18931	16780	14342	12190	9752	7601	5306	3012
	Approx Lumens @5000K	19310	17116	14629	12434	9948	7753	5413	3072
SAM-24L-U-40-T4	Input Power (W)	165	142	123	104	84	64	44	25
	Approx Lumens @3000K	23203	19969	17297	14625	11812	9000	6187	3516
	Approx Lumens @4000K	24424	21019	18207	15395	12434	9474	6513	3701
	Approx Lumens @5000K	24912	21439	18571	15702	12682	9663	6643	3775
SAM-30L-U-40-T4	Input Power (W)	222	196	169	142	115	88	62	34
	Approx Lumens @3000K	29688	26211	22600	18990	15379	11768	8291	4547
	Approx Lumens @4000K	31251	27591	23790	19989	16189	12388	8728	4786
	Approx Lumens @5000K	31876	28143	24266	20389	16512	12636	8902	4882
SAM-36L-U-40-T4	Input Power (W)	237	210	182	154	126	99	71	42
	Approx Lumens @3000K	34913	30936	26811	22686	18561	14584	10459	6187
	Approx Lumens @4000K	36750	32563	28222	23880	19538	15351	11009	6513
	Approx Lumens @5000K	37485	33215	28786	24357	19929	15658	11230	6643
SAM-42L-U-40-T4	Input Power (W)	277	239	207	174	142	109	76	43
	Approx Lumens @3000K	38885	33551	29058	24426	19934	15301	10669	6036
	Approx Lumens @4000K	40932	35317	30588	25712	20983	16107	11230	6354
	Approx Lumens @5000K	41751	36023	31200	26226	21403	16429	11455	6481
SAM-50L-U-40-T4	Input Power (W)	339	292	253	213	174	133	93	53
	Approx Lumens @3000K	47771	41148	35652	30015	24520	18742	13105	7469
	Approx Lumens @4000K	50285	43313	37528	31595	25810	19728	13795	7862
	Approx Lumens @5000K	51291	44180	38279	32227	26326	20123	14071	8019

SPECIFICATIONS

CONSTRUCTION
The Skyline series features a slim profile die-cast aluminum housing available in 2 different sizes for a fully scalable solution. The versatile 9 optional mounting methods allow for easy installation while the hinged door allows for quick drop-down driver access for maintenance. The standard Keyhole / slotted UMB mounting bracket allows for a “no-drilling” 1-man installation by mounting the UMB on existing pole drillings and the luminaire head onto the UMB, substantially reducing installation labor. The fully gasketed housing is IP66 rated for whole luminaire ingress protection against moisture and environmental contaminants. The Skyline’s low-profile design results in a low EPA, allowing pole optimization to thinner or smaller size pole shafts. Vibration rated per ANSI C136.31 on all mountings (see table Above). The Skyline Series is protected with a durable bronze polyester powder coat finish to withstand extreme weather changes without cracking or peeling.

OPTICS
The IP66 silicone gasket sealed optical chamber utilizes proprietary polycarbonate refractive optics to provide exceptional coverage and uniformity in factory rotatable IES Types 2, 3, 4, 5S (Square) or FTA (Forward Throw Automotive). Polycarbonate optics are impact resistant and UV stabilized for maximum longevity. Available in 5000K, 4000K, and 3000K, color temperatures per ANSI C78.377. Minimum CRI of 70. The optical integrated House side shield (HSS) option allows for improved backlight control without any large shields taking away from the site. The Skyline series produces Zero uplight and is IDA listed in 3000K color temperature. Optional field installed 3-sided glare shield accessory is available for on-site external house side protection.

ELECTRICAL
Class 1 High-performance drivers features over-voltage, under-voltage, short circuit and over temperature protection. 0-10V dimming (10% - 100%) standard. Standard Universal Voltage (120-277 Vac) Input 50/60 Hz or optional High Voltage (347-480 Vac). L80 >100,000 hrs. in accordance with IESNA TM-21-19 projected values at 25°C Ambient temperature. Total harmonic distortion: <20%. Power factor: >0.90. Input power stays constant over life. Minimum 6kV surge rating meets a minimum Category C Low operation (per ANSI/IEEE C62.41.2). Additional protection is available in 10kV and 20kV options.

THERMAL
The Skyline Series features an array of High-efficacy LED's mounted on a metal core circuit board. The LED boards are mounted directly to the cast aluminum housing with heat dissipating fins to provide excellent thermal performance extending the life of electronic components. Operating Ambient Temperature: -40°C to +50°C (-40°F to 122°F) 50L Lumen –– Package: -40°C to +45°C (-40°F to 113°F).

INSTALLATION
The versatile Skyline series comes with 9 optional mounting methods. The standard keyhole / slotted universal mounting bracket (UMB) allows for a “no-drilling” 1-man installation by mounting the UMB on existing pole drillings and the luminaire head onto the UMB, substantially reducing installation labor. The 3G rated UMB quick mount allows for pole mounting onto square 4-6" poles with a vertical mounting pattern between 2"-5" and the UMB/R adds additional mounting capability to any round pole 3"-6" in diameter. The 3G rated universal adjustable mount (UAB) model adds full range tilting to the standard UMB fixed model. The 3G rated wall fixed mount (WFM) allows for easy installation to any vertical wall surface or J-box. The optional 3G rated wall adjustable mount (WAM) adds full range wall mount tilting. The 3G rated horizontal mast arm (HTM) mount is designed for straight horizontal 2"(2-3/8" OD) mast arms. The 1.5G rated adjustable slip fitter (SLPF) mounts to any vertical or horizontal tenon 2" pipe (2-3/8" OD) allowing for full range tilting.

The 3G rated wall fixed mount (WFM) allows for easy installation to any vertical wall surface or J-box. The optional 3G rated wall adjustable mount (WAM) adds full range wall mount tilting. The 3G rated horizontal mast arm (HMA) mount is designed for straight horizontal 2"(2-3/8" OD) mast arms. The 1.5G rated adjustable slip fitter (SLPF) mounts to any vertical or horizontal tenon 2" pipe (2-3/8" OD) allowing for full range tilting.

The trunnion/yoke bracket (TRN) enables the Skyline to be used for general flood applications with full range tilting as required.
All mounting methods are provided with a 3-wire 3' outdoor rated cord is provided for wiring. 5-wire cord optional for external dimming, consult factory. See charts above for all vibration, weight, and EPA results.

CONTROLS
Standalone Controls:
Factory installed 3-Pin & 7-Pin ANSI C136.41 Control Receptacle Options available. Dusk to Dawn twist lock photocells sold separately (See accessories). Optional PIR sensors available installed in housing hinged door. Sensors provide optional on/off control, photocell capability, bi-level dimming, high-end trim, and bluetooth configuration allows for on-site modifications.

Wireless Control Systems:
The Skyline Series is wireless mesh controls ready with Synapse, Enlighted, and Leviton Bluetooth Mesh wireless control platforms. Available with and without PIR sensors. Inquire with factory for more information or for additional controls options, including customer supplied items.

WARRANTY
5 Year Warranty Standard; 10 Year Warranty Optional (Terms and Conditions apply).

CERTIFICATIONS
ETL Listed for wet locations. Tested in accordance with IESNA LM-79 and LM-80 standards. BAA compliant. RoHS Compliant. Title 24 Compliant; see local ordinance for qualification information. IP66 rated Luminaire per IEC 60598. IP66 rated optical chamber. ASTM B117 Salt Spray Tested 500 Hrs.

DLC Premium Listed Product, Not all versions of this product may be DLC Premium qualified. Please check the DLC Qualified Products List at www.designlights.org/QPL to confirm which versions are qualified.

SKYLINE
AREA LIGHT SERIES

BASIC

FAO
Internal bi-level switch offers adjustable light levels for greater flexibility within one product. Utilizes 0-10V dimming wires and cannot be combined with other sensor or control options.

CRxP
3-Pin or 7-pin ANSI C136.41-2013 control receptacle option available for NEMA twist lock photocontrols or wireless control modules. Control accessories sold separately. Dimming leads from the receptacle will be connected to the driver dimming leads (Consult factory for alternate wiring). x = Number of pins (3 or 7).

FSP-311/Ly - FSP-321/Ly
Optional Bluetooth Programmable PIR sensor allows for Continuous Dimming, Motion and/ or daylight harvesting, Fully adjustable high/low dimmed light levels, and Adjustable time delay/ cutoff delay. The sensor is programmed via a free iOS® or Android® Sensor Configuration App (compatible device provided by others). Available in 10'-20' or 20'-40' mounting lenses. See coverage patterns below, L7=20'-40', L3=20'-40'.

Default Settings:
- High Mode: 100% Output
- Low Mode: 10% Output
- Time Delay: 5 mins
- Cutoff: 1 hr
- Sensitivity: High
- Photocell: Disabled
- Continuous Dimming: Disabled

ADVANCED

Synapse (SYN or TL7)
Utilizing a robust 2.4 GHz Self-Healing Mesh Network, Synapse provides flexibility and scalability making it a perfect outdoor solution for both new construction and retrofit projects. The easy-to-use web application is accessible on any device with an internet connection and allows for complete customization of the system and its features. Integral radio (SYN) includes (2) 24V inputs for a Wattstopper sensor or twist lock photocell into the wireless lighting system. External radio (TL7) includes (1) low voltage input for a Wattstopper sensor, available in both universal(120-277V) or high voltage (480V). Sensors available in 20' or 40' mounting lenses. See coverage patterns below. Sensor mounted on hinged driver cover. Antenna exits side of luminaire for maximum connectivity.

Enlighted
Enlighted's three-tier, over-the-air upgradeable wireless control platforms provide out-of-the-box compliance with energy use regulations. The comprehensive capabilities of the sensor include vacancy detection, daylight harvesting, demand response, and energy savings reporting. Enlighted's enterprise system allows for easy integration of indoor and outdoor lighting with building management systems for site-wide IOT management. Enlighted ruggedized sensor mounted on hinged driver cover.

· **Enlighted One (SU/5S/LR/IL)**
-Fixtures are controlled based on occupancy and ambient light. Includes ability to group fixtures together and connect to a switch to zone fixtures for group operation.
· **Enlighted Connected (SU/5S/LR/CL)**
-Fixtures are controlled based on occupancy & ambient light. Includes individual lighting control plus connection to Enlighted Energy Manager. The Energy Manager provides data analysis for all data collected by the Enlighted Smart Sensors for energy, occupancy & environment.
· **Enlighted IOT (SU/5S/LR/IOT)**
-Fixtures are controlled based on occupancy and ambient light. Includes individual lighting control plus connection to Enlighted Energy Manager. The Energy Manager provides data analysis for all data collected by Enlighted Smart Sensors for energy, occupancy & environment. Additionally, the IOT functionality takes the data access and function beyond just lighting to a wide range of applications beyond the standard connected lighting controls.

Leviton ZLD1Z
Optional Bluetooth Groupable PIR sensor that allows for Programmable Options such as, Continuous Dimming, Motion and/ or daylight harvesting, fully adjustable high/ low dimmed light levels, and Adjustable time delay/ cutoff delay. The sensor is programmed via a free iOS® or Android® Sensor Configuration App (compatible device provided by others). Sensor Mesh Grouping allows for 16 devices per group, with both Occupancy and Daylight Control. Recommended spacing < 100'. Comes standard with both 8'-20' or 20'-40' mounting lenses. See coverage patterns on page 6..

Default Settings:
- High Mode: 100% Output
- Auto-ON/Auto-OFF with 20-minute timeout
- Sensitivity: High
- Daylight Harvesting: Enabled

COVERAGE PATTERNS

SYNS/L2 and FSP-311/Ly - FSP-321/Ly

Top View

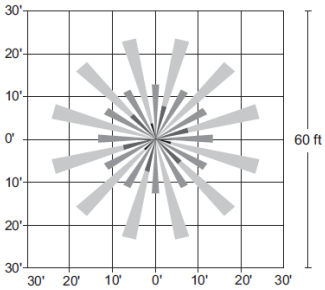

Side View

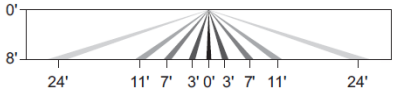

SYNS/L3 and FSP-311/Ly - FSP-321/Ly

Top View

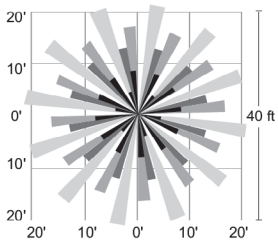

Side View

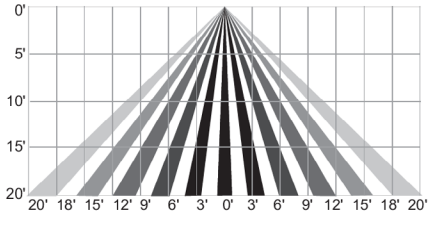

SYNS/L7 and FSP-311/Ly - FSP-321/Ly

Top View

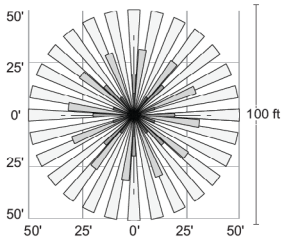

Side View

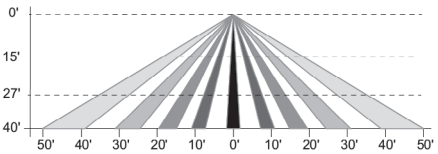

SKYLINE
AREA LIGHT SERIES

COVERAGE PATTERNS
Leviton Low Mount

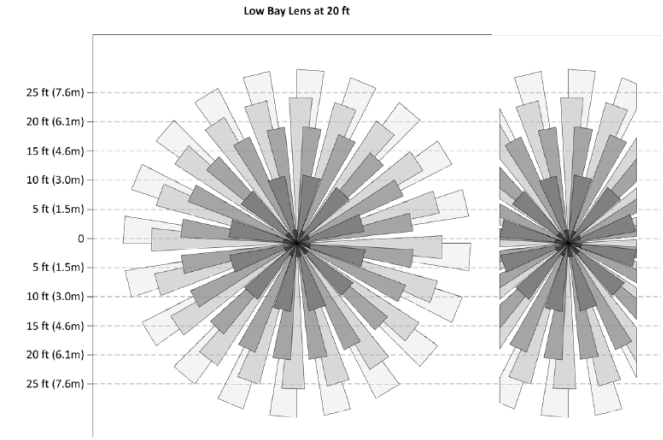

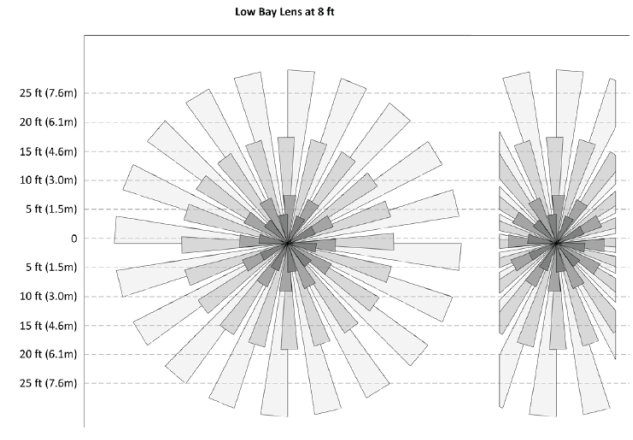

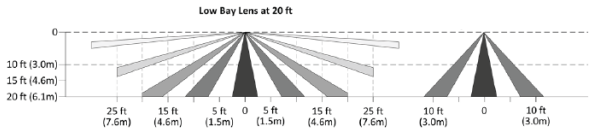

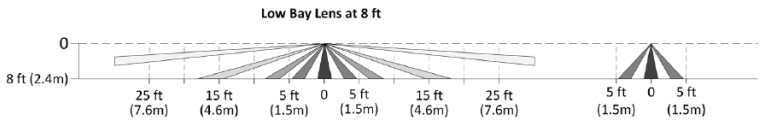

Leviton High Mount

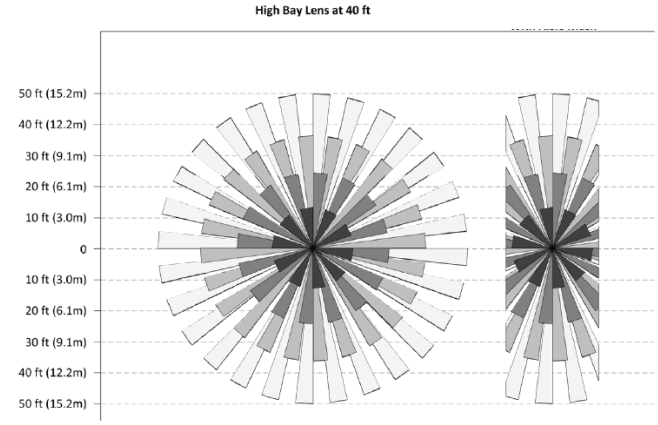

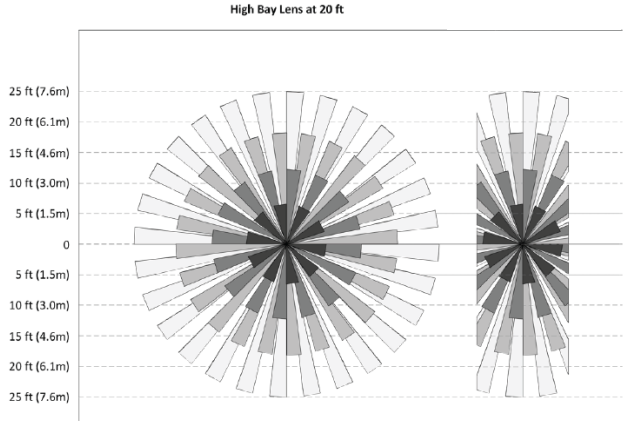

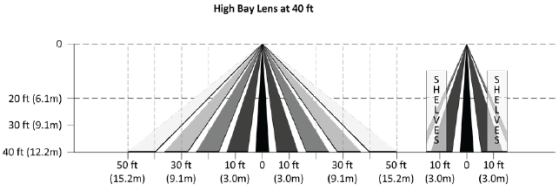

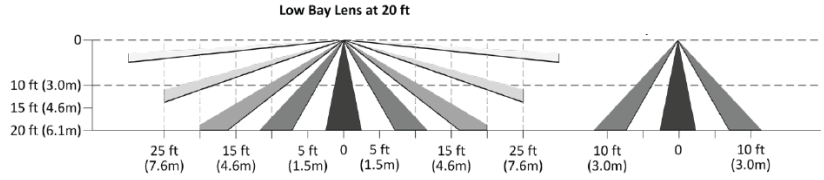

BACK LIGHT CONTROL OPTIONS



HSS
Integral House Side Shield
Delivers backlight control that significantly reduces light spill behind the pole for applications with pole locations close to adjacent properties. Shown with Medium housing . HSS rotates with optic distribution.



GS
External Glare Shield
Rotatable 3-sided field installable external glare shield. Shown with Medium housing

SKYLINE
AREA LIGHT SERIES

LINE DRAWINGS

SAS Universal Mounting Bracket (UMB)

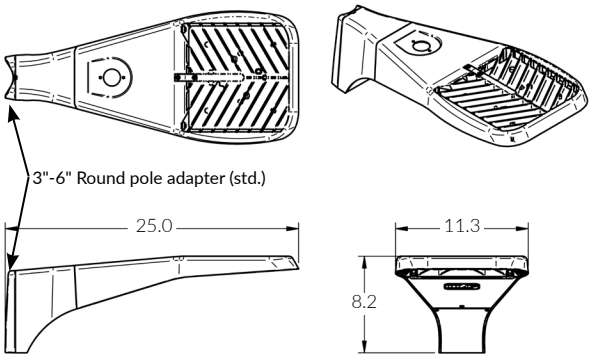

UMB/UAB Mounting Detail

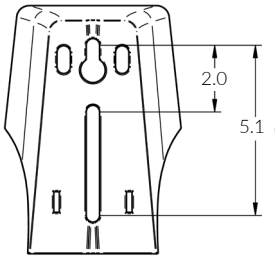

SAS Universal Adjustable Mount Bracket (UAB)

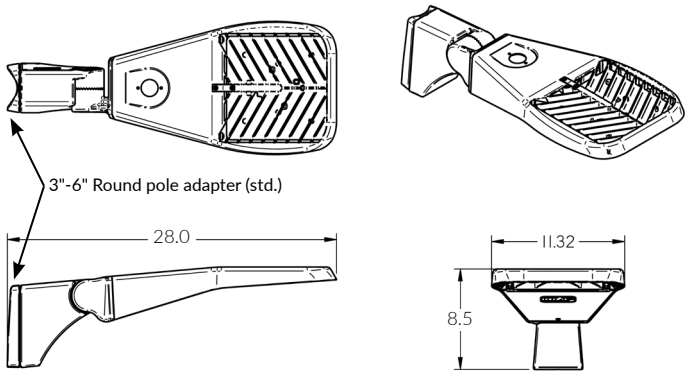

SAS Adjustable Slip Fitter (SLPF)

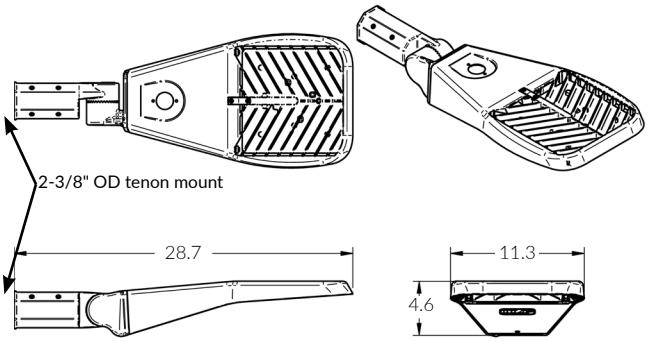

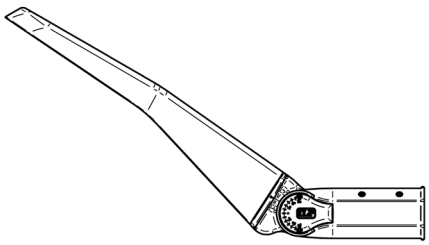

SAS Horizontal Tenon Mount (HTM)

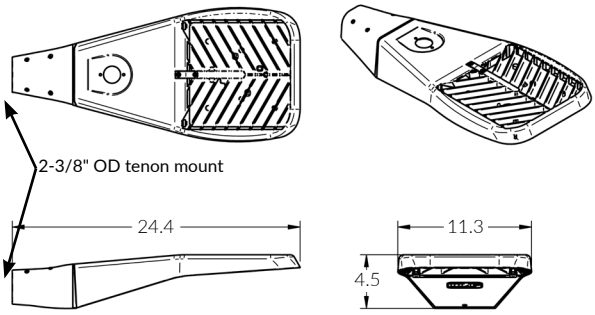

SKYLINE
AREA LIGHT SERIES

SAS Wall Fixed Mount (WFM)

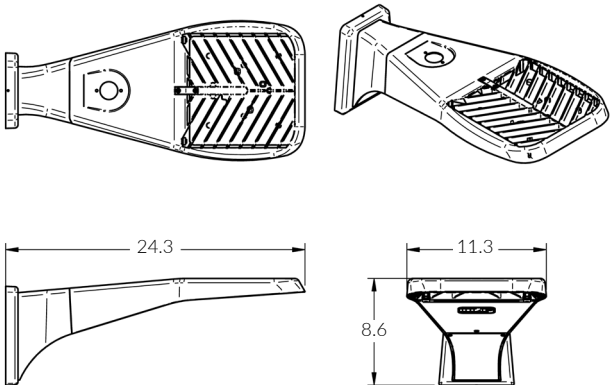

WFM/WAM Mounting Detail

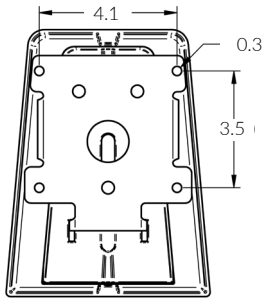

SAS Wall Adjustable Mount Bracket (WAM)

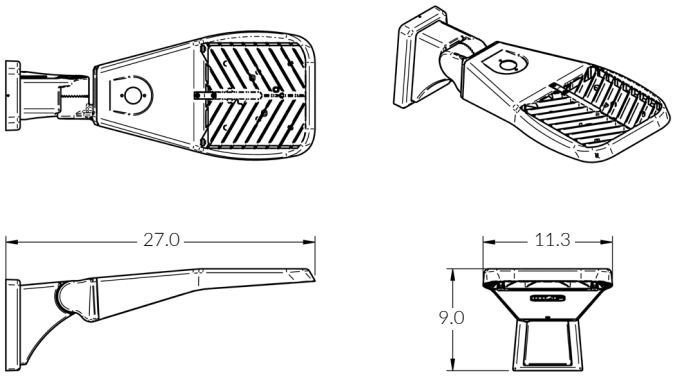

SAS Trunnion Mount (TRN)

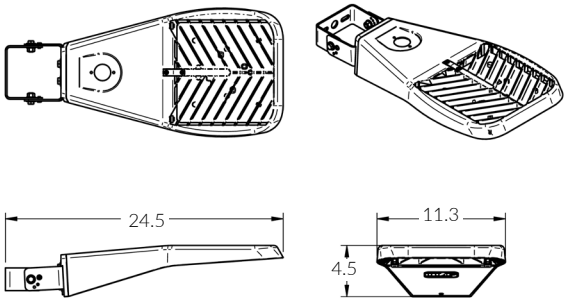

Trunnion Mounting Detail

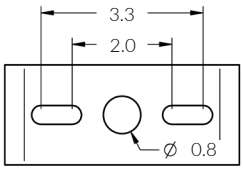

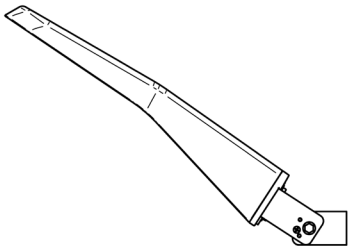

SAM Universal Mounting Bracket (UMB)

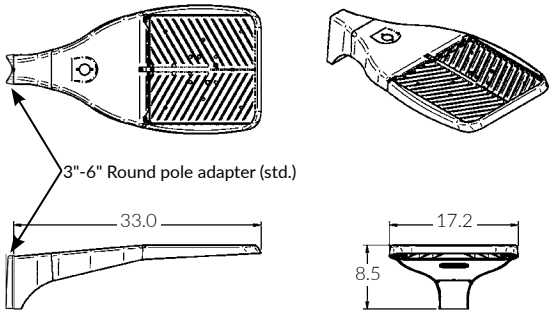

UMB/UAB Mounting Detail

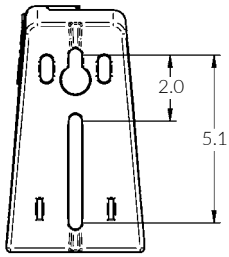

SKYLINE
AREA LIGHT SERIES

SAM Universal Adjustable Mount Bracket (UAB)

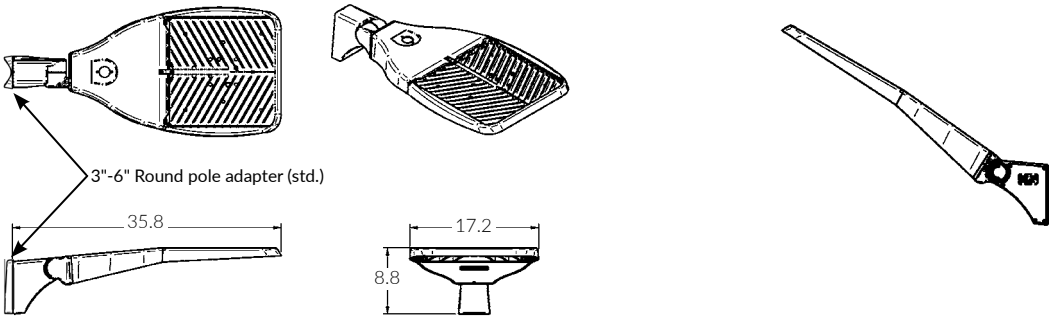

SAM Adjustable Slip Fitter (SLPF)

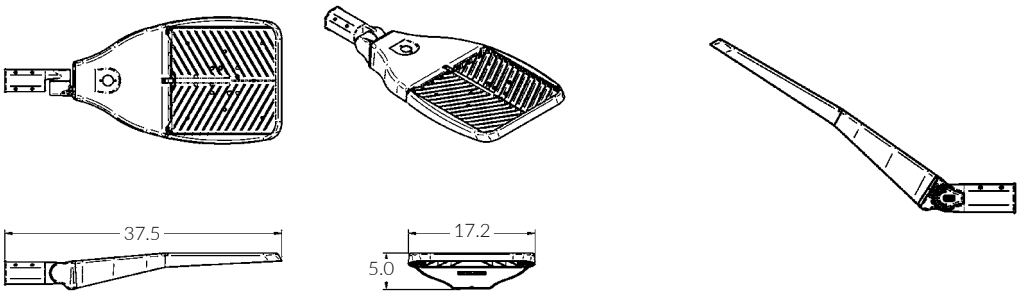

SAM Horizontal Tenon Mount (HTM)

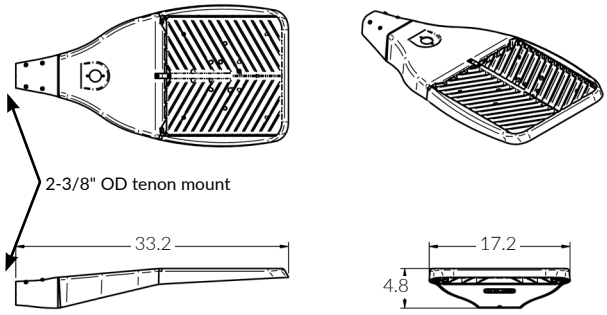

SAM Wall Fixed Mount (WFM)

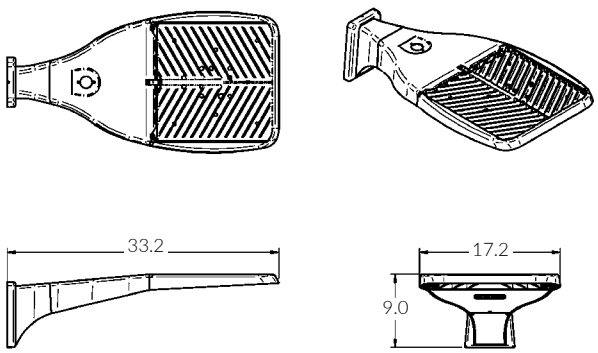

WFM/WAM Mounting Detail

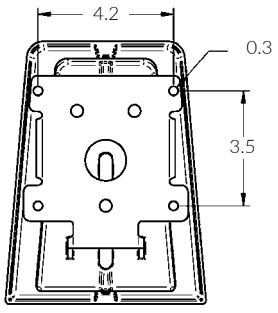

SKYLINE
AREA LIGHT SERIES

SAM Wall Adjustable Mount Bracket WAM

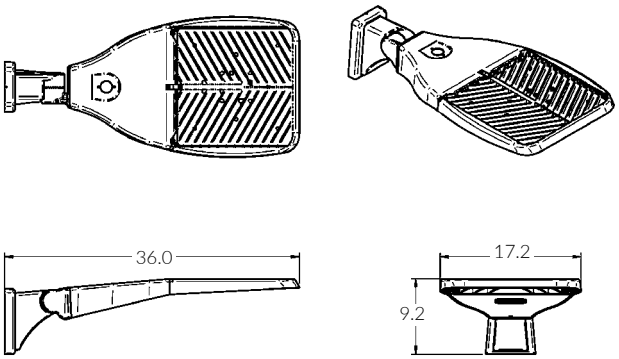

SAM Trunnion Mount (TRN)

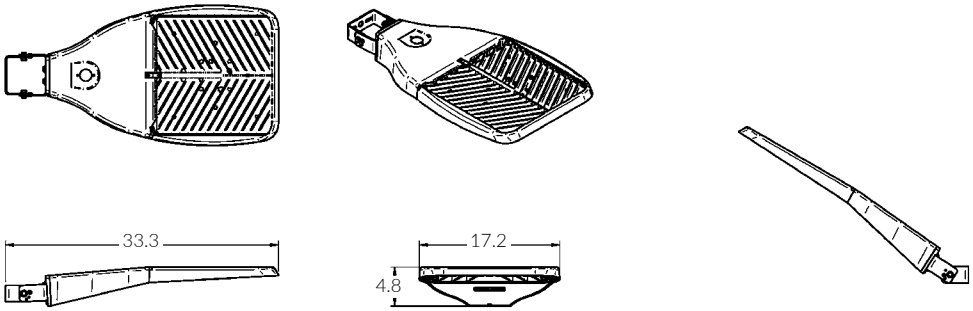

OPTICS ORIENTATION

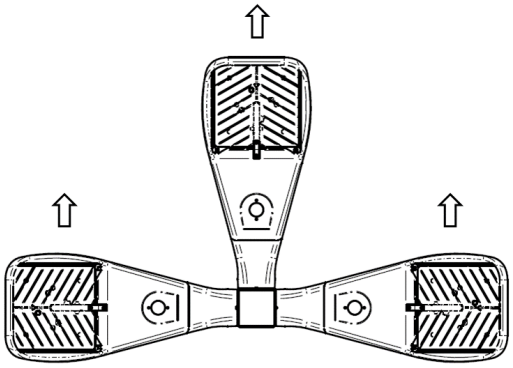

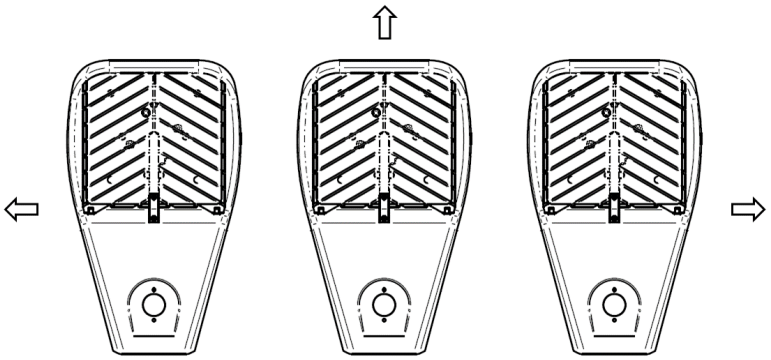

FACTORY SELECT FINISH GUIDE

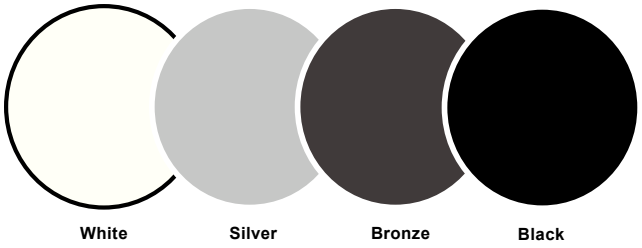

COLOR NAME AND DESCRIPTION	PRICING
WHT - ILP White	Standard
SLV - ILP Silver	Standard
BRZ - ILP Bronze	Standard
BLK - ILP Black	Standard

COLORS SHOWN ABOVE ARE TO BE USED AS REFERENCE, NOT EXACT MATCH. PLEASE REQUEST PAINT CHIPS FOR EXACT MATCH.

PHOTOMETRIC REPORTS

Photometric values based upon tests performed in compliance with LM-79. IES files can be downloaded at www.ilp-inc.com

FTA

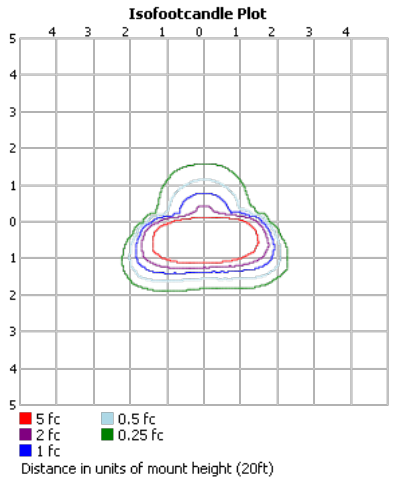

T2

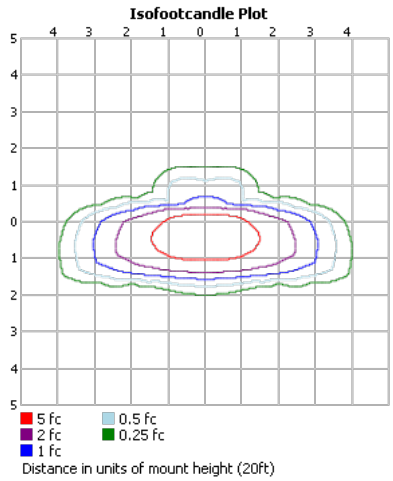

T3

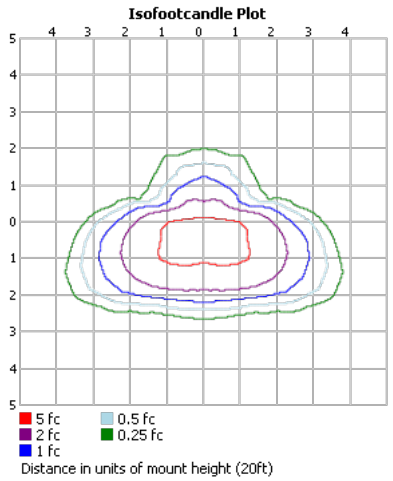

T4

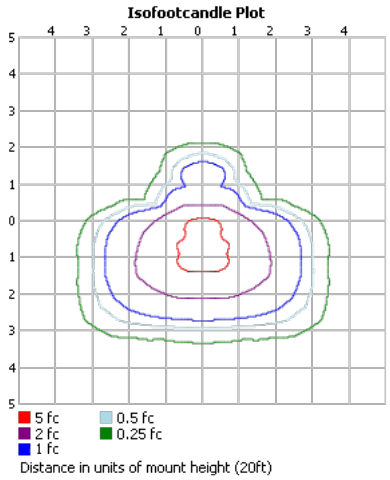

T5S

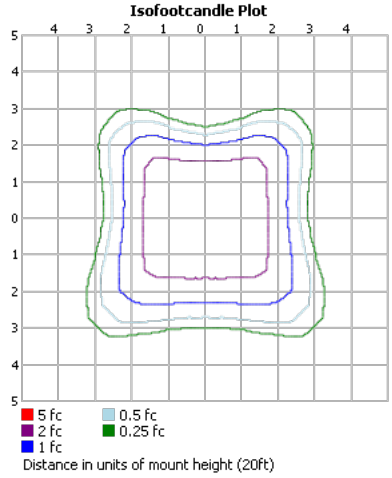

Project Name:	Part Number: SAS-15L-U-30-T2-UMB-BRZ	Type: A1

SKYLINE

AREA LIGHT SERIES



* Shown with UMB Mounting

407-478-3759
www.ilp-inc.com

Product Overview

SCAN ME

FEATURES

- Specification Grade die-cast aluminum housing
- Bronze polyester powder coat finish (standard)
- Custom and factory select colors available
- 5 Optical Distributions with Highest Uniformity in their product class
- Factory Rotatable Type 2, 3, 4, 5 Square, & Automotive Front Row Optics
- Optional Spill Light Control Integral Shield (HSS)
- Universal Quick Pole Mount Allows for 1 man installation on existing poles with no drilling required
- 9 Different Optional Mounting Methods (3G Rated)[3]
- Single Fastener hinged door driver access
- 120–277V Universal Voltage or 347–480V High Voltage
- 0–10V Dimmable Driver (std.)
- PIR Occupancy, Photocell, & Bi-Level Dimming Sensors Available
- 3-Pin & 7-Pin ANSI C136.41 Control Receptacle Options
- Wireless control integrated luminaire
- 3000K, 4000K & 5000K CCT
- >70 Color Rendering Index (CRI)
- Calculated L80 >100,000 hrs @ 25°C per TM-21-11
- IP66 Rated Luminaire
- Dark Sky Compliant[1,2]
- 5 Year Warranty; 10 Year Optional Warranty[4]
- ETL Listed for Wet Locations
- DesignLights Consortium® Premium Qualified Luminaire

[1] 3000K is IDA Listed [2] Must select UMB, WFM, or HTM mounting options to qualify
[3] TRN & SLPF 1.5G Rated [4] Requires additional Surge Protection (SP1, SP2, SP480V2); For additional details see General Terms and Conditions

SUITABLE APPLICATIONS

- Parking Lots
- Parking Structure
- Parks
- Education
- Hospitals
- Car Dealerships
- Roadways
- Shopping Centers

ORDERING GUIDE

SERIES	LUMENS	VOLTAGE	CCT	DISTRIBUTION	ORIENTATION	MOUNTING	FINISH	WARRANTY
☑ **SAS** Small	☐ **6L** 6,000 lm	☑ **U** 120-277v	☑ **30** 3000K	☑ **T2** T2 - Type 2	☑ (Blank) - Standard	☐ **SLPF** Adjustable Slip Fitter	☑ **BRZ**	☑ **(Blank)** 5YR
	☐ **9L** 9,000 lm	☐ **HV** 347-480v	☐ **40** 4000K	☐ **T3** T3 - Type 3	☐ **L** Optics Rotated Left	☑ **UMB** Universal Fixed	☐ **BLK**	☐ **10YR**[10] 10YR
	☐ **12L** 12,000 lm		☐ **50** 5000K	☐ **T4** T4 - Type 4	☐ **R** Optics Rotated Right	☐ **UMB/R** Universal Mount Sqr/ Rnd pole 3"-6"	☐ **WHT**	
	☑ **15L** 15,000 lm			☐ **T5S** Type 5 Square		☐ **UAB** Universal Adjustable	☐ **SLV**	
	☐ **18L** 18,000 lm			☐ **FTA** Forward Throw Automotive		☐ **UAB/R** Universal Adjustable Sqr/Rnd pole 3"-6"	☐ **RALxxxx** [9]	
						☐ **WFM** Wall Fixed Mount		
☐ **SAM** Med	☐ **24L** 24,000 lm					☐ **WAM** Wall Adjustable Mount		
	☐ **30L** 30,000 lm					☐ **TRN** Trunnion Mount		
	☐ **36L** 36,000 lm					☐ **HTM** Horizontal Tenon Mount		
	☐ **42L** 42,000 lm							
	☐ **50L** 50,000 lm							

BASIC CONTROLS

☐ **(Blank)**	None
☐ **FAO**[1,8]	Field Adjustable Output
☐ **CR3P**[8]	3-Pin NEMA Control receptacle
☐ **CR7P**[6,8]	7-Pin NEMA Control receptacle
☐ **FSP-311/LX**[1,3,8]	Legrand FSP-311 120-277V Sensor (X = Mounting Height 3=10-20', 7=20-40')
☐ **FSP-321/LX**[3,8]	Legrand FSP-321 347-480V Sensor (X = Mounting Height 3=10-20', 7=20-40')
☐ **CR3P/FAO**[8]	Universal 3-Pin control receptacle (See acc. for photocells) with Field Adjustable Output - 7 level selection connected to 0-10V dimming wires
☐ **CR7P/FSP/Lx**[8]	Universal 7-Pin control receptacle with FSP Sensor (X= Mounting Height, 3=20', 7=40') (Controls provided by others)

ADVANCED CONTROLS

☐ **(Blank)**	None
☐ **SYN**[5,8]	Synapse Control System
☐ **SYNS/LX**[5,8]	Synapse Control System w/ Sensor (X = Mounting Height 3=10-20', 7=20-40')
☐ **SU/5S/LR/IL**[1,8]	Enlighted 5S Individual Lighting (IL) Sensor with Control Unit
☐ **SU/5S/LR/CL**[1,8]	Enlighted 5S Connected Lighting (CL) Sensor with Control Unit
☐ **SU/5S/LR/IOT**[1,8]	Enlighted 5S Internet of Things (IOT) Sensor with Control Unit
☐ **ZLD1Z**[1,3,8]	Leviton ZLD1Z 120-277V Bluetooth Groupable Sensor (16 Devices) with 8-20' & 20-40' lens included

OPTIONS - FACTORY INSTALLED

☐ **(Blank)**	None
☐ **SP1**[1]	10kA Surge Protection Device
☐ **SP2**[1]	20kA Surge Protection Device
☐ **SP1HV**	10kA Max 480V Surge Protector
☐ **SP480V2**	20kA Max 480V Surge Protector
☐ **HSS**[2]	Rotatable House Side Shield
☐ **FUSE/SXXX**	FUSE 120V, 277V, 347V (x= voltage)
☐ **FUSE/DXXX**	FUSE 208V, 240V, 480V (x= voltage)

ACCESSORIES

☐ **SAx/BIRD**	Bird Spikes (x= fixture size)
☐ **SAx/GS**[2]	Rotatable Glare Shield (x= fixture size)
☐ **TL7/B2**[1,5,7]	Synapse Twist Lock Mesh Network 120-277V
☐ **ILP PAINT CHIP PACK**	ILP Standard Color Paint Chips
☐ **TL7/HVG**[5,7]	Synapse Twist Lock Mesh Network 480V
☐ **TLPC/HV**[4]	347-480V Twist Lock Photocell
☐ **TLPC/UNV**[1,4]	120-277V Twist Lock Photocell

[1] Not available with HV option [2] Option Not DLC qualified
[3] Requires Bluetooth Enabled device for programming (provided by others)
[4] Only Compatible with CR3P and CR7P
[5] Contact Factory for Site Layout, For HV models contact Factory for pricing.
[6] Dimming Leads will be wired to receptacle unless otherwise specified
[7] CR7P Required
[8] Only one control option allowed
[9] Contact factory for pricing and availability
[10] Requires additional Surge Protection (SP1, SP2, SP480V2); For additional details see General Terms and Conditions. Consult Factory for pricing

SKYLINE
AREA LIGHT SERIES

LED SYSTEMS INFO		3000K		4000K		5000K		BUG Rating	Watts[2]	Replaces
Part Numbers	Distribution	Lumens	Efficacy	Lumens	Efficacy	Lumens	Efficacy			
SAS-6L	2	6322	138.0	6655	145.3	6788	148.2	B1-U0-G1	46 W	175W MH
	3	6301	137.6	6633	144.8	6766	147.7	B1-U0-G2		
	4	6234	136.1	6562	143.3	6693	146.1	B1-U0-G1		
	5S	6345	138.5	6679	145.8	6813	148.7	B3-U0-G2		
	FTA	6824	149.0	7183	156.8	7327	160.0	B1-U0-G1		
SAS-9L	2	8941	127.9	9412	134.6	9600	137.3	B1-U0-G2	70 W	250W MH
	3	8912	127.5	9381	134.2	9569	136.9	B2-U0-G2		
	4	8817	126.1	9281	132.8	9467	135.4	B2-U0-G2		
	5S	8973	128.4	9445	135.1	9634	137.8	B4-U0-G2		
	FTA	9650	138.1	10158	145.3	10361	148.2	B1-U0-G1		
SAS-12L	2	12693	154.4	13361	162.5	13628	165.8	B2-U0-G2	82 W	320W MH
	3	12652	153.9	13318	162.0	13584	165.3	B2-U0-G2		
	4	12516	152.3	13175	160.3	13439	163.5	B2-U0-G2		
	5S	12739	155.0	13409	163.1	13677	166.4	B4-U0-G2		
	FTA	13700	166.7	14421	175.4	14709	178.9	B2-U0-G1		
SAS-15L	2	16013	148.1	16856	155.9	17193	159.0	B2-U0-G2	108 W	400W MH
	3	15962	147.7	16802	155.4	17138	158.5	B2-U0-G2		
	4	15791	146.1	16622	153.8	16954	156.8	B2-U0-G2		
	5S	16070	148.7	16916	156.5	17254	159.6	B4-U0-G2		
	FTA	17283	159.9	18193	168.3	18557	171.7	B2-U0-G1		
SAS-18L	2	18245	138.5	19205	145.8	19589	148.7	B3-U0-G2	132 W	400W MH
	3	18186	138.1	19143	145.4	19526	148.3	B3-U0-G3		
	4	17984	136.6	18931	143.7	19310	146.6	B3-U0-G3		
	5S	18310	139.0	19274	146.3	19659	149.3	B5-U0-G3		
	FTA	19692	149.5	20728	157.4	21143	160.5	B2-U0-G1		
SAM-24L	2	23494	142.4	24730	149.9	25225	152.9	B3-U0-G3	165 W	400W MH
	3	23373	141.7	24603	149.1	25095	152.1	B3-U0-G4		
	4	23203	140.6	24424	148.0	24912	151.0	B3-U0-G4		
	5S	23911	144.9	25169	152.5	25672	155.6	B5-U0-G3		
	FTA	23559	142.8	24799	150.3	25295	153.3	B2-U0-G2		
SAM-30L	2	30061	135.0	31643	142.1	32276	144.9	B3-U0-G3	222 W	750W MH
	3	29906	134.3	31480	141.4	32110	144.2	B3-U0-G4		
	4	29688	133.3	31251	140.3	31876	143.1	B3-U0-G4		
	5S	30594	137.4	32204	144.6	32848	147.5	B5-U0-G4		
	FTA	30144	135.4	31730	142.5	32365	145.3	B3-U0-G2		
SAM-36L	2	36547	153.6	38470	161.7	39239	164.9	B3-U0-G3	237 W	750W MH
	3	36357	152.8	38271	160.9	39036	164.1	B3-U0-G5		
	4	34913	146.8	36750	154.5	37485	157.6	B3-U0-G5		
	5S	35977	151.2	37871	159.2	38628	162.4	B5-U0-G4		
	FTA	35448	149.0	37314	156.8	38060	160.0	B3-U0-G2		
SAM-42L	2	39231	141.6	41296	149.0	42122	152.0	B4-U0-G3	277 W	1000W MH
	3	39099	141.1	41157	148.5	41980	151.5	B3-U0-G5		
	4	38885	140.3	40932	147.7	41751	150.7	B3-U0-G5		
	5S	39927	144.1	42028	151.7	42869	154.7	B5-U0-G4		
	FTA	39340	142.0	41410	149.4	42238	152.4	B3-U0-G2		
SAM-50L	2	48196	142.3	50732	149.8	51747	152.8	B4-U0-G4	338.6	1000W MH
	3	48033	141.9	50561	149.3	51573	152.3	B4-U0-G5		
	4	47771	141.1	50285	148.5	51291	151.5	B4-U0-G5		
	5S	49050	144.9	51631	152.5	52664	155.5	B5-U0-G5		
	FTA	48329	142.7	50872	150.2	51890	153.2	B3-U0-G3		

[1]Values are nominal, see IES file for more detail [2]Electrical data at 25C (77F). Actual wattage may differ by +/-10%.

SKYLINE
AREA LIGHT SERIES

EPA RATINGS AND VIBRATION CHART

	SLPF		UMB		UAB		WFM		WAM		TRN		HTM		WEIGHT
SAS	0.53	1.5g	0.47	3g	0.53	3g	0.47	3g	0.53	3g	0.47	1.5g	0.47	3g	11 lbs
SAM	0.71	1.5g	0.64	3g	0.71	3g	0.64	3g	0.71	3g	0.64	1.5g	0.64	3g	22 lbs
WEIGHT	4.5 lbs		2.5 lbs		5.5 lbs		3.0 lbs		6.0 lbs		2.5 lbs		3.5 lbs		

* EPA Ratings listed assume fixture is mounted horizontally. For adjustable mounting options, EPA will vary with selected angle.

TILT DEGREE		0°	30°	45°
 Single	SAS	0.47	1.32	1.72
	SAM	0.64	2.49	3.32
 D180°	SAS	1.03	1.32	1.72
	SAM	1.41	2.49	3.32
 D90°	SAS	0.85	1.58	1.72
	SAM	1.15	2.99	3.32

TILT DEGREE		0°	30°	45°
 T90°	SAS	1.13	1.83	2.39
	SAM	1.54	3.46	4.61
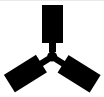 TN120°	SAS	1.22	2.77	3.58
	SAM	1.66	5.23	6.91
 Q90°	SAS	1.13	1.83	2.39
	SAM	1.54	3.46	4.61

*EPA for UMB, WFM, TRN, and HTM mounts

ELECTRICAL DATA (AMPS)

Lumen Package	120V	208V	240V	277V	347V	480V
6L	0.38 A	0.22 A	0.19 A	0.17 A	0.13 A	0.10 A
9L	0.58 A	0.34 A	0.29 A	0.25 A	0.20 A	0.15 A
12L	0.73 A	0.42 A	0.37 A	0.32 A	0.25 A	0.18 A
15L	0.92 A	0.53 A	0.46 A	0.40 A	0.32 A	0.23 A
18L	1.14 A	0.66 A	0.57 A	0.49 A	0.39 A	0.29 A
24L	1.39 A	0.80 A	0.70 A	0.60 A	0.48 A	0.35 A
30L	1.83 A	1.06 A	0.92 A	0.79 A	0.63 A	0.46 A
36L	1.96 A	1.13 A	0.98 A	0.85 A	0.68 A	0.49 A
42L	2.27 A	1.31 A	1.13 A	0.98 A	0.78 A	0.57 A
50L	2.82 A	1.63 A	1.41 A	1.22 A	0.98 A	0.71 A

[1]Electrical data at 25C (77F). Actual wattage may differ by +/-10%.

FIELD ADJUSTABLE OUTPUT DATA (FAO)

Part Number	FAO Position	0	1	2	3	4	5	6	7
SAS-6L-U-40-T4	Input Power (W)	46	40	35	29	24	19	13	8
	Approx Lumens @3000K	6234	5421	4743	3930	3253	2575	1762	1084
	Approx Lumens @4000K	6562	5706	4993	4137	3424	2710	1854	1141
	Approx Lumens @5000K	6693	5820	5093	4220	3492	2765	1892	1164
SAS-9L-U-40-T4	Input Power (W)	70	61	52	44	35	27	19	10
	Approx Lumens @3000K	8817	7683	6550	5542	4409	3401	2393	1260
	Approx Lumens @4000K	9281	8088	6894	5834	4641	3580	2519	1326
	Approx Lumens @5000K	9467	8250	7033	5951	4734	3652	2570	1352
SAS-12L-U-40-T4	Input Power (W)	82	72	61	52	43	33	23	14
	Approx Lumens @3000K	12516	10990	9311	7937	6563	5037	3511	2137
	Approx Lumens @4000K	13175	11568	9801	8355	6909	5302	3695	2249
	Approx Lumens @5000K	13439	11800	9997	8522	7047	5408	3769	2294
SAS-15L-U-40-T4	Input Power (W)	108	95	82	70	57	44	31	18
	Approx Lumens @3000K	15791	13890	11989	10235	8334	6433	4533	2632
	Approx Lumens @4000K	16622	14621	12620	10774	8773	6772	4771	2770
	Approx Lumens @5000K	16954	14913	12872	10989	8948	6907	4866	2826
SAS-18L-U-40-T4	Input Power (W)	132	117	100	85	68	53	37	21
	Approx Lumens @3000K	17984	15940	13624	11581	9264	7221	5041	2861
	Approx Lumens @4000K	18931	16780	14342	12190	9752	7601	5306	3012
	Approx Lumens @5000K	19310	17116	14629	12434	9948	7753	5413	3072
SAM-24L-U-40-T4	Input Power (W)	165	142	123	104	84	64	44	25
	Approx Lumens @3000K	23203	19969	17297	14625	11812	9000	6187	3516
	Approx Lumens @4000K	24424	21019	18207	15395	12434	9474	6513	3701
	Approx Lumens @5000K	24912	21439	18571	15702	12682	9663	6643	3775
SAM-30L-U-40-T4	Input Power (W)	222	196	169	142	115	88	62	34
	Approx Lumens @3000K	29688	26211	22600	18990	15379	11768	8291	4547
	Approx Lumens @4000K	31251	27591	23790	19989	16189	12388	8728	4786
	Approx Lumens @5000K	31876	28143	24266	20389	16512	12636	8902	4882
SAM-36L-U-40-T4	Input Power (W)	237	210	182	154	126	99	71	42
	Approx Lumens @3000K	34913	30936	26811	22686	18561	14584	10459	6187
	Approx Lumens @4000K	36750	32563	28222	23880	19538	15351	11009	6513
	Approx Lumens @5000K	37485	33215	28786	24357	19929	15658	11230	6643
SAM-42L-U-40-T4	Input Power (W)	277	239	207	174	142	109	76	43
	Approx Lumens @3000K	38885	33551	29058	24426	19934	15301	10669	6036
	Approx Lumens @4000K	40932	35317	30588	25712	20983	16107	11230	6354
	Approx Lumens @5000K	41751	36023	31200	26226	21403	16429	11455	6481
SAM-50L-U-40-T4	Input Power (W)	339	292	253	213	174	133	93	53
	Approx Lumens @3000K	47771	41148	35652	30015	24520	18742	13105	7469
	Approx Lumens @4000K	50285	43313	37528	31595	25810	19728	13795	7862
	Approx Lumens @5000K	51291	44180	38279	32227	26326	20123	14071	8019

SPECIFICATIONS

CONSTRUCTION
The Skyline series features a slim profile die-cast aluminum housing available in 2 different sizes for a fully scalable solution. The versatile 9 optional mounting methods allow for easy installation while the hinged door allows for quick drop-down driver access for maintenance. The standard Keyhole / slotted UMB mounting bracket allows for a “no-drilling” 1-man installation by mounting the UMB on existing pole drillings and the luminaire head onto the UMB, substantially reducing installation labor. The fully gasketed housing is IP66 rated for whole luminaire ingress protection against moisture and environmental contaminants. The Skyline’s low-profile design results in a low EPA, allowing pole optimization to thinner or smaller size pole shafts. Vibration rated per ANSI C136.31 on all mountings (see table Above). The Skyline Series is protected with a durable bronze polyester powder coat finish to withstand extreme weather changes without cracking or peeling.

OPTICS
The IP66 silicone gasket sealed optical chamber utilizes proprietary polycarbonate refractive optics to provide exceptional coverage and uniformity in factory rotatable IES Types 2, 3, 4, 5S (Square) or FTA (Forward Throw Automotive). Polycarbonate optics are impact resistant and UV stabilized for maximum longevity. Available in 5000K, 4000K, and 3000K, color temperatures per ANSI C78.377. Minimum CRI of 70. The optical integrated House side shield (HSS) option allows for improved backlight control without any large shields taking away from the site. The Skyline series produces Zero uplight and is IDA listed in 3000K color temperature. Optional field installed 3-sided glare shield accessory is available for on-site external house side protection.

ELECTRICAL
Class 1 High-performance drivers features over-voltage, under-voltage, short circuit and over temperature protection. 0-10V dimming (10% - 100%) standard. Standard Universal Voltage (120-277 Vac) Input 50/60 Hz or optional High Voltage (347-480 Vac). L80 >100,000 hrs. in accordance with IESNA TM-21-19 projected values at 25°C Ambient temperature. Total harmonic distortion: <20%. Power factor: >0.90. Input power stays constant over life. Minimum 6kV surge rating meets a minimum Category C Low operation (per ANSI/IEEE C62.41.2). Additional protection is available in 10kV and 20kV options.

THERMAL
The Skyline Series features an array of High-efficacy LED's mounted on a metal core circuit board. The LED boards are mounted directly to the cast aluminum housing with heat dissipating fins to provide excellent thermal performance extending the life of electronic components. Operating Ambient Temperature: -40°C to +50°C (-40°F to 122°F) 50L Lumen –– Package: -40°C to +45°C (-40°F to 113°F).

INSTALLATION
The versatile Skyline series comes with 9 optional mounting methods. The standard keyhole / slotted universal mounting bracket (UMB) allows for a “no-drilling” 1-man installation by mounting the UMB on existing pole drillings and the luminaire head onto the UMB, substantially reducing installation labor. The 3G rated UMB quick mount allows for pole mounting onto square 4-6" poles with a vertical mounting pattern between 2"-5" and the UMB/R adds additional mounting capability to any round pole 3"-6" in diameter. The 3G rated universal adjustable mount (UAB) model adds full range tilting to the standard UMB fixed model. The 3G rated wall fixed mount (WFM) allows for easy installation to any vertical wall surface or J-box. The optional 3G rated wall adjustable mount (WAM) adds full range wall mount tilting. The 3G rated horizontal mast arm (HTM) mount is designed for straight horizontal 2"(2-3/8" OD) mast arms. The 1.5G rated adjustable slip fitter (SLPF) mounts to any vertical or horizontal tenon 2" pipe (2-3/8" OD) allowing for full range tilting.

The 3G rated wall fixed mount (WFM) allows for easy installation to any vertical wall surface or J-box. The optional 3G rated wall adjustable mount (WAM) adds full range wall mount tilting. The 3G rated horizontal mast arm (HMA) mount is designed for straight horizontal 2"(2-3/8" OD) mast arms. The 1.5G rated adjustable slip fitter (SLPF) mounts to any vertical or horizontal tenon 2" pipe (2-3/8" OD) allowing for full range tilting.

The trunnion/yoke bracket (TRN) enables the Skyline to be used for general flood applications with full range tilting as required.
All mounting methods are provided with a 3-wire 3' outdoor rated cord is provided for wiring. 5-wire cord optional for external dimming, consult factory. See charts above for all vibration, weight, and EPA results.

CONTROLS
Standalone Controls:
Factory installed 3-Pin & 7-Pin ANSI C136.41 Control Receptacle Options available. Dusk to Dawn twist lock photocells sold separately (See accessories). Optional PIR sensors available installed in housing hinged door. Sensors provide optional on/off control, photocell capability, bi-level dimming, high-end trim, and bluetooth configuration allows for on-site modifications.

Wireless Control Systems:
The Skyline Series is wireless mesh controls ready with Synapse, Enlighted, and Leviton Bluetooth Mesh wireless control platforms. Available with and without PIR sensors. Inquire with factory for more information or for additional controls options, including customer supplied items.

WARRANTY
5 Year Warranty Standard; 10 Year Warranty Optional (Terms and Conditions apply).

CERTIFICATIONS
ETL Listed for wet locations. Tested in accordance with IESNA LM-79 and LM-80 standards. BAA compliant. RoHS Compliant. Title 24 Compliant; see local ordinance for qualification information. IP66 rated Luminaire per IEC 60598. IP66 rated optical chamber. ASTM B117 Salt Spray Tested 500 Hrs.

DLC Premium Listed Product, Not all versions of this product may be DLC Premium qualified. Please check the DLC Qualified Products List at www.designlights.org/QPL to confirm which versions are qualified.

SKYLINE
AREA LIGHT SERIES

BASIC

FAO
Internal bi-level switch offers adjustable light levels for greater flexibility within one product. Utilizes 0-10V dimming wires and cannot be combined with other sensor or control options.

CRxP
3-Pin or 7-pin ANSI C136.41-2013 control receptacle option available for NEMA twist lock photocontrols or wireless control modules. Control accessories sold separately. Dimming leads from the receptacle will be connected to the driver dimming leads (Consult factory for alternate wiring). x = Number of pins (3 or 7).

FSP-311/Ly - FSP-321/Ly
Optional Bluetooth Programmable PIR sensor allows for Continuous Dimming, Motion and/ or daylight harvesting, Fully adjustable high/low dimmed light levels, and Adjustable time delay/ cutoff delay. The sensor is programmed via a free iOS® or Android® Sensor Configuration App (compatible device provided by others). Available in 10'-20' or 20'-40' mounting lenses. See coverage patterns below, L7=20'-40', L3=20'-40'.

Default Settings:
- High Mode: 100% Output
- Low Mode: 10% Output
- Time Delay: 5 mins
- Cutoff: 1 hr
- Sensitivity: High
- Photocell: Disabled
- Continuous Dimming: Disabled

ADVANCED

Synapse (SYN or TL7)
Utilizing a robust 2.4 GHz Self-Healing Mesh Network, Synapse provides flexibility and scalability making it a perfect outdoor solution for both new construction and retrofit projects. The easy-to-use web application is accessible on any device with an internet connection and allows for complete customization of the system and its features. Integral radio (SYN) includes (2) 24V inputs for a Wattstopper sensor or twist lock photocell into the wireless lighting system. External radio (TL7) includes (1) low voltage input for a Wattstopper sensor, available in both universal(120-277V) or high voltage (480V). Sensors available in 20' or 40' mounting lenses. See coverage patterns below. Sensor mounted on hinged driver cover. Antenna exits side of luminaire for maximum connectivity.

Enlighted
Enlighted's three-tier, over-the-air upgradeable wireless control platforms provide out-of-the-box compliance with energy use regulations. The comprehensive capabilities of the sensor include vacancy detection, daylight harvesting, demand response, and energy savings reporting. Enlighted's enterprise system allows for easy integration of indoor and outdoor lighting with building management systems for site-wide IOT management. Enlighted ruggedized sensor mounted on hinged driver cover.

· **Enlighted One (SU/5S/LR/IL)**
-Fixtures are controlled based on occupancy and ambient light. Includes ability to group fixtures together and connect to a switch to zone fixtures for group operation.
· **Enlighted Connected (SU/5S/LR/CL)**
-Fixtures are controlled based on occupancy & ambient light. Includes individual lighting control plus connection to Enlighted Energy Manager. The Energy Manager provides data analysis for all data collected by the Enlighted Smart Sensors for energy, occupancy & environment.
· **Enlighted IOT (SU/5S/LR/IOT)**
-Fixtures are controlled based on occupancy and ambient light. Includes individual lighting control plus connection to Enlighted Energy Manager. The Energy Manager provides data analysis for all data collected by Enlighted Smart Sensors for energy, occupancy & environment. Additionally, the IOT functionality takes the data access and function beyond just lighting to a wide range of applications beyond the standard connected lighting controls.

Leviton ZLD1Z
Optional Bluetooth Groupable PIR sensor that allows for Programmable Options such as, Continuous Dimming, Motion and/ or daylight harvesting, fully adjustable high/ low dimmed light levels, and Adjustable time delay/ cutoff delay. The sensor is programmed via a free iOS® or Android® Sensor Configuration App (compatible device provided by others). Sensor Mesh Grouping allows for 16 devices per group, with both Occupancy and Daylight Control. Recommended spacing < 100'. Comes standard with both 8'-20' or 20'-40' mounting lenses. See coverage patterns on page 6..

Default Settings:
- High Mode: 100% Output
- Auto-ON/Auto-OFF with 20-minute timeout
- Sensitivity: High
- Daylight Harvesting: Enabled

COVERAGE PATTERNS

SYNS/L2 and FSP-311/Ly - FSP-321/Ly

Top View

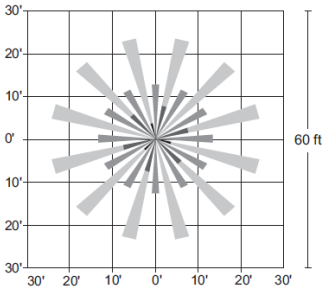

Side View

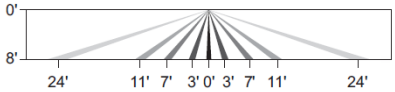

SYNS/L3 and FSP-311/Ly - FSP-321/Ly

Top View

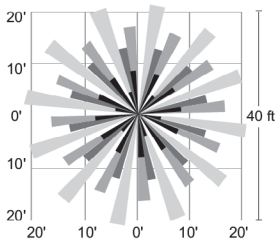

Side View

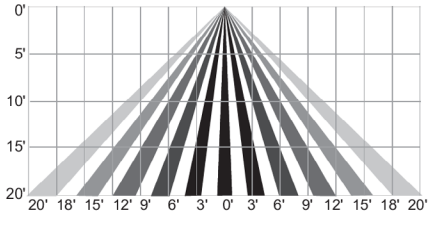

SYNS/L7 and FSP-311/Ly - FSP-321/Ly

Top View

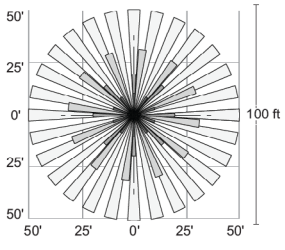

Side View

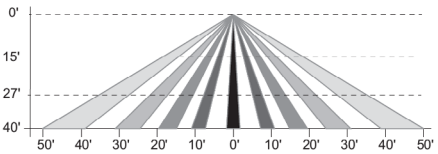

SKYLINE
AREA LIGHT SERIES

COVERAGE PATTERNS
Leviton Low Mount

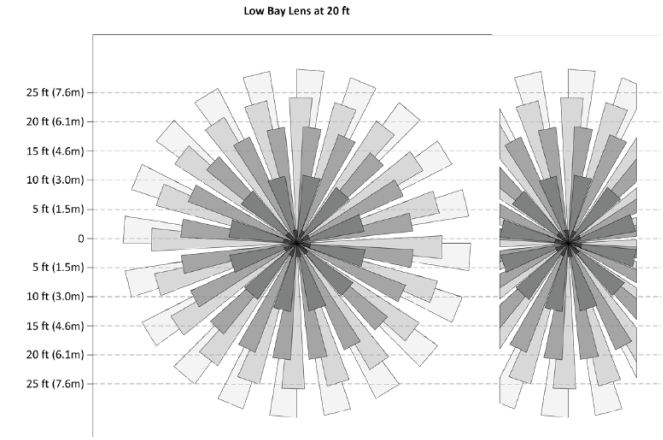

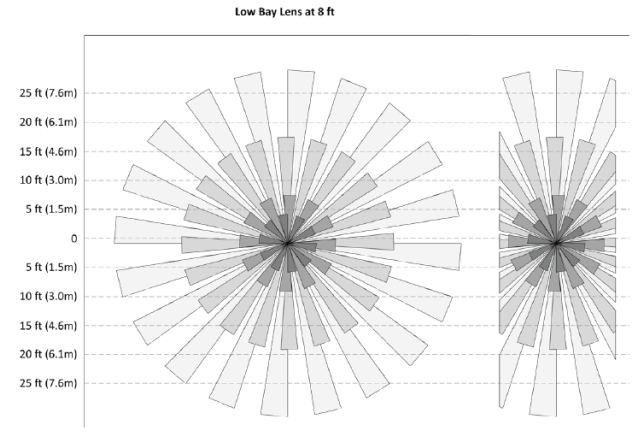

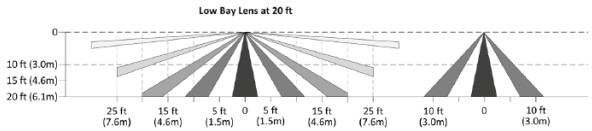

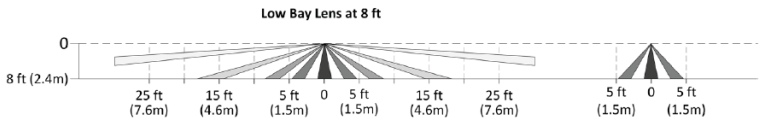

Leviton High Mount

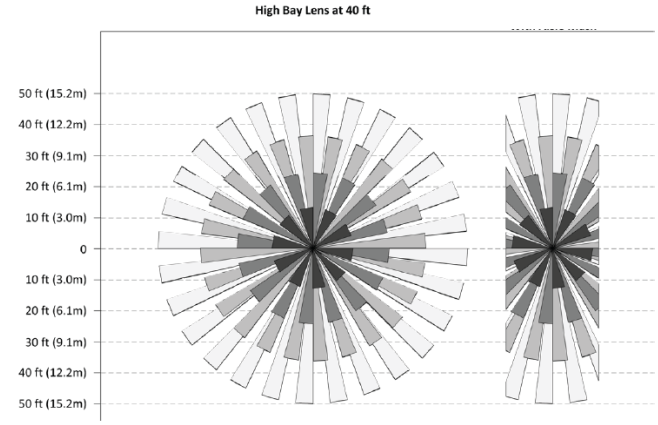

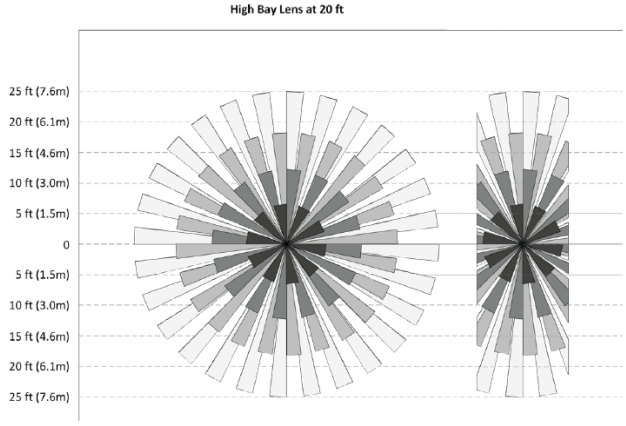

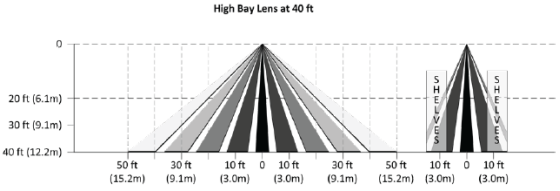

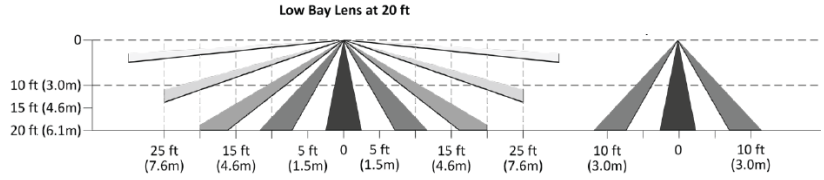

BACK LIGHT CONTROL OPTIONS



HSS
Integral House Side Shield
Delivers backlight control that significantly reduces light spill behind the pole for applications with pole locations close to adjacent properties. Shown with Medium housing . HSS rotates with optic distribution.



GS
External Glare Shield
Rotatable 3-sided field installable external glare shield. Shown with Medium housing

SKYLINE
AREA LIGHT SERIES

LINE DRAWINGS

SAS Universal Mounting Bracket (UMB)

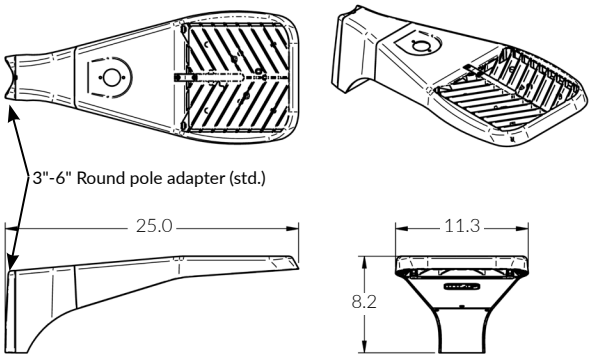

UMB/UAB Mounting Detail

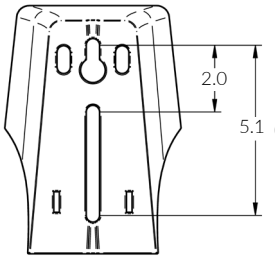

SAS Universal Adjustable Mount Bracket (UAB)

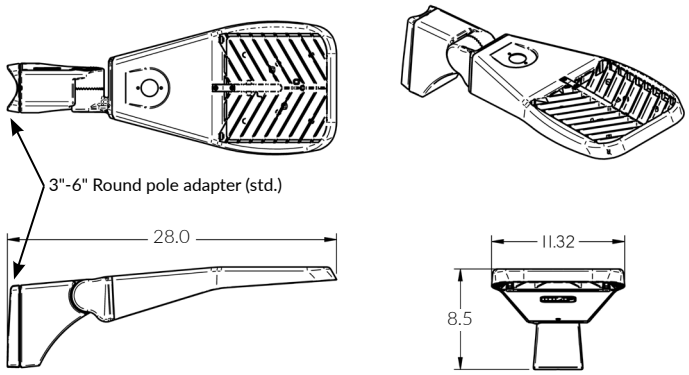

SAS Adjustable Slip Fitter (SLPF)

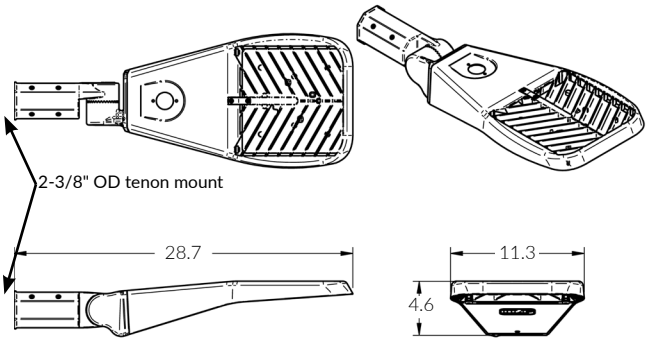

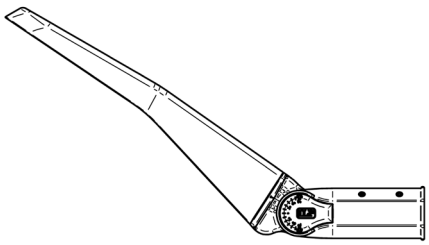

SAS Horizontal Tenon Mount (HTM)

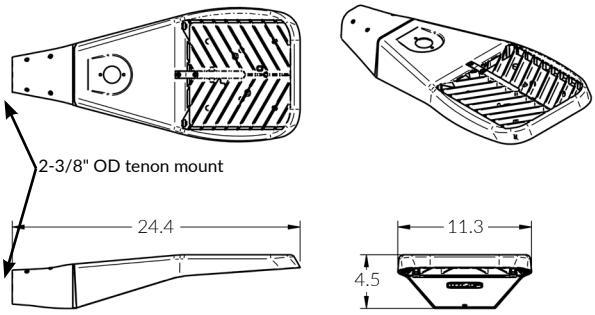

SKYLINE
AREA LIGHT SERIES

SAS Wall Fixed Mount (WFM)

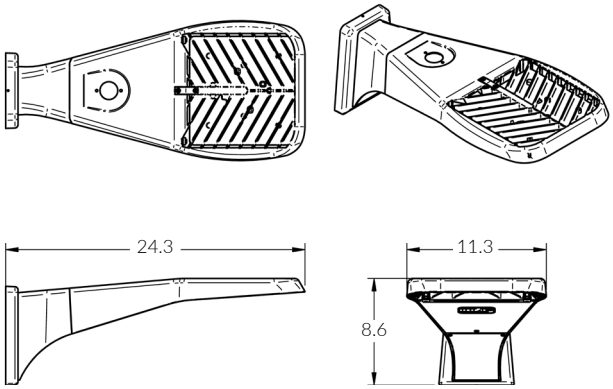

WFM/WAM Mounting Detail

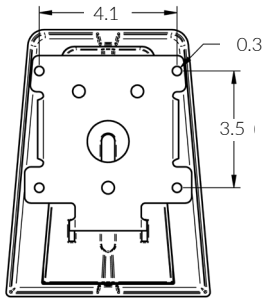

SAS Wall Adjustable Mount Bracket (WAM)

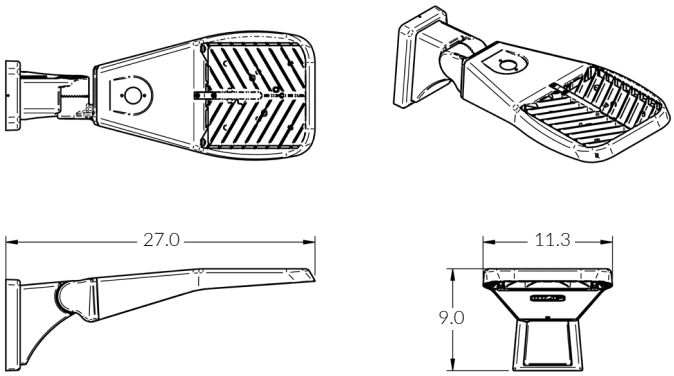

SAS Trunnion Mount (TRN)

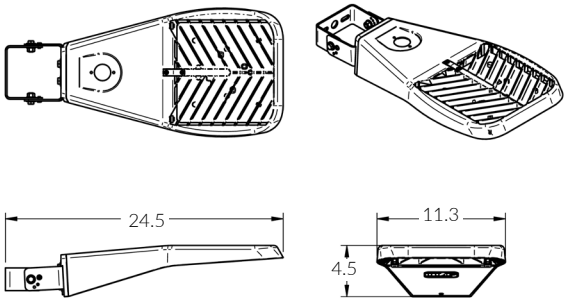

Trunnion Mounting Detail

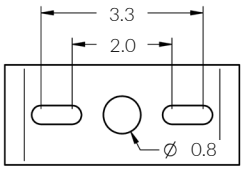

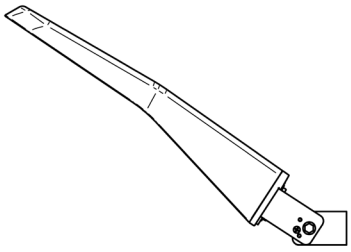

SAM Universal Mounting Bracket (UMB)

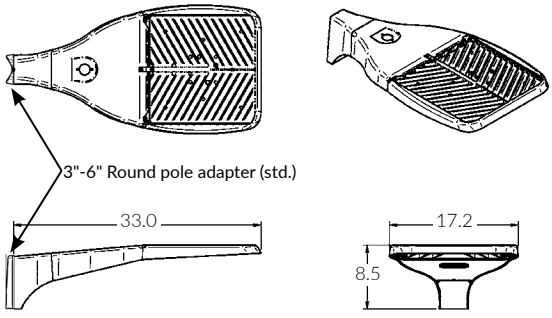

UMB/UAB Mounting Detail

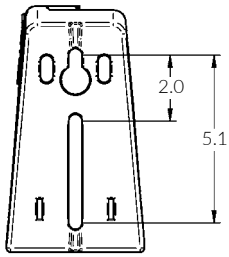

SKYLINE
AREA LIGHT SERIES

SAM Universal Adjustable Mount Bracket (UAB)

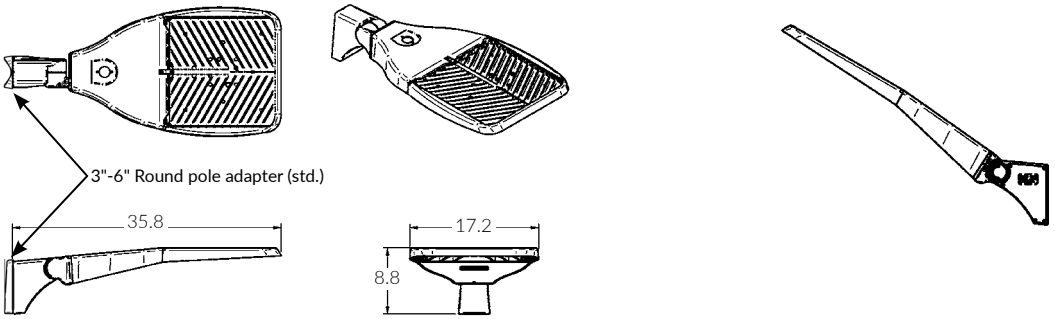

SAM Adjustable Slip Fitter (SLPF)

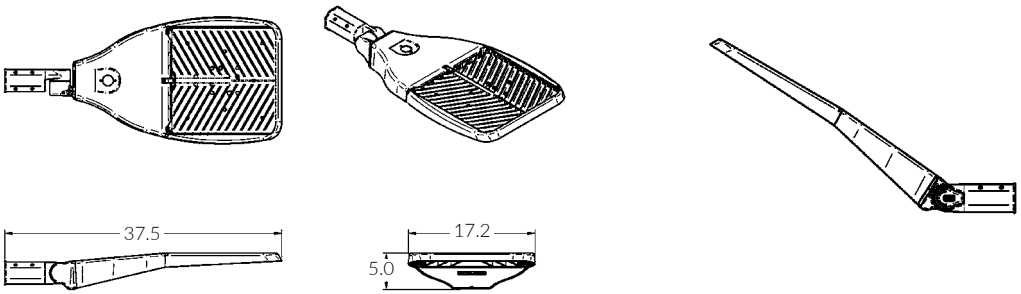

SAM Horizontal Tenon Mount (HTM)

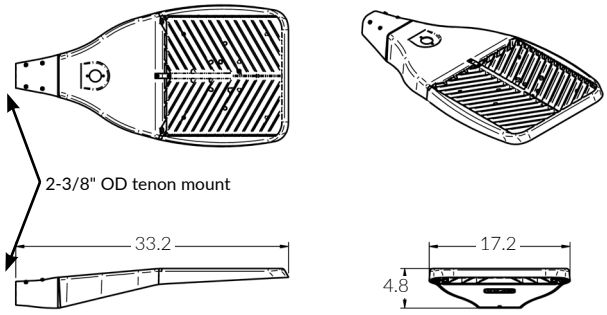

SAM Wall Fixed Mount (WFM)

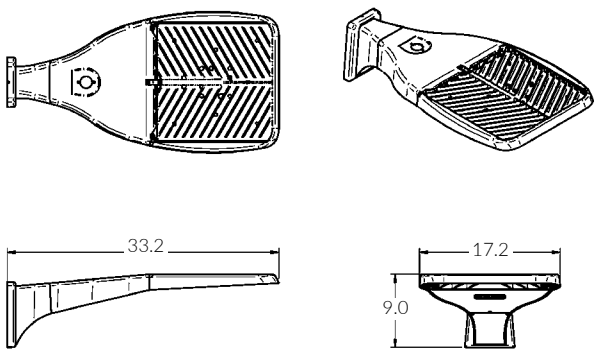

WFM/WAM Mounting Detail

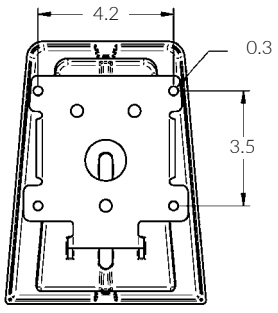

SKYLINE
AREA LIGHT SERIES

SAM Wall Adjustable Mount Bracket WAM

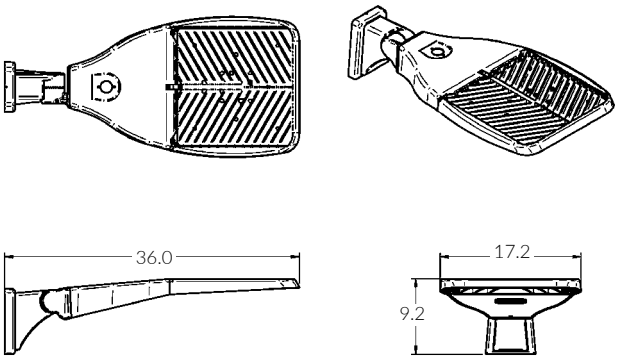

SAM Trunnion Mount (TRN)

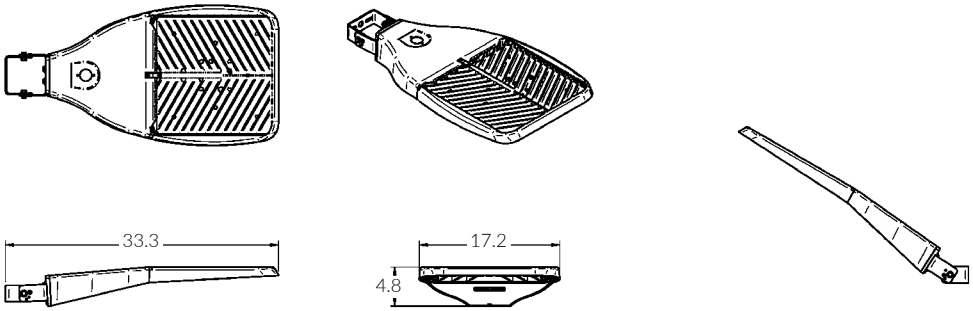

OPTICS ORIENTATION

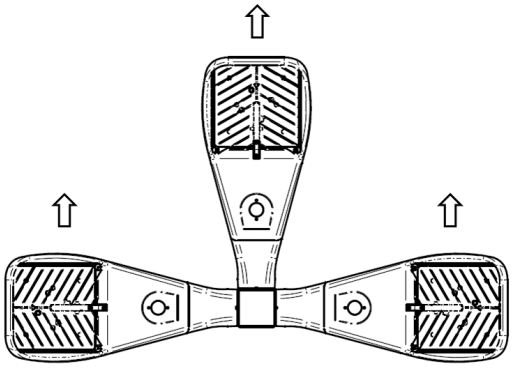

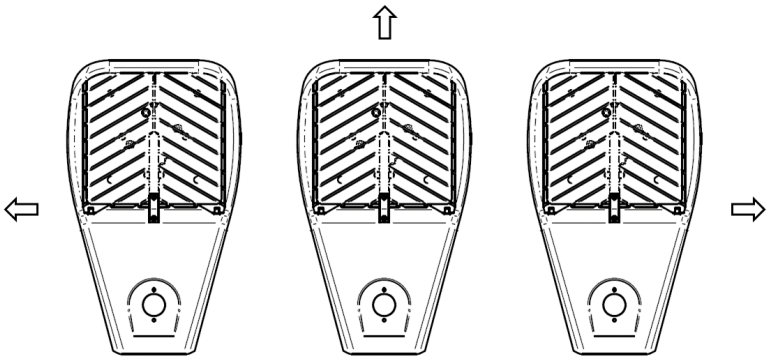

FACTORY SELECT FINISH GUIDE

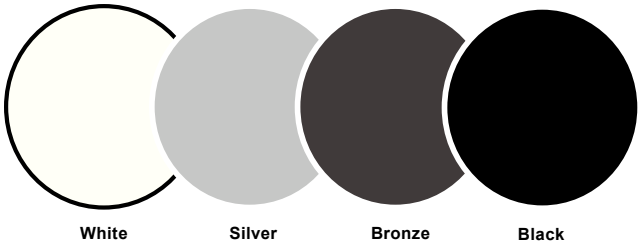

COLOR NAME AND DESCRIPTION	PRICING
WHT - ILP White	Standard
SLV - ILP Silver	Standard
BRZ - ILP Bronze	Standard
BLK - ILP Black	Standard

COLORS SHOWN ABOVE ARE TO BE USED AS REFERENCE, NOT EXACT MATCH. PLEASE REQUEST PAINT CHIPS FOR EXACT MATCH.

PHOTOMETRIC REPORTS

Photometric values based upon tests performed in compliance with LM-79. IES files can be downloaded at www.ilp-inc.com

FTA

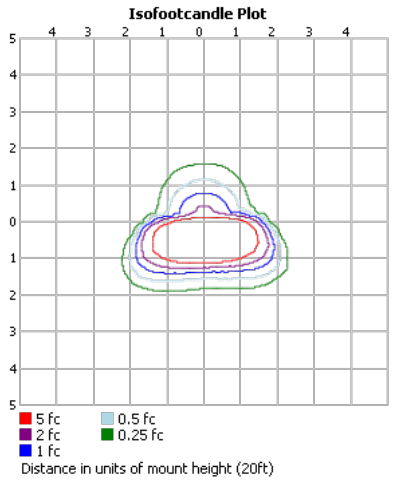

T2

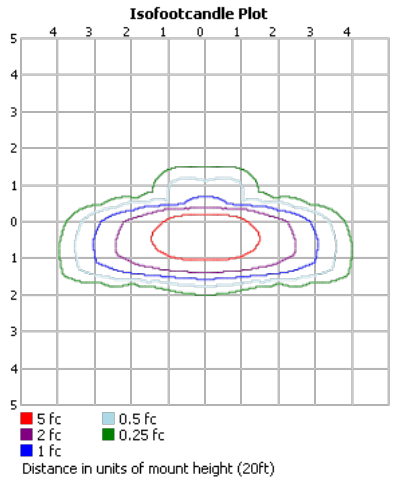

T3

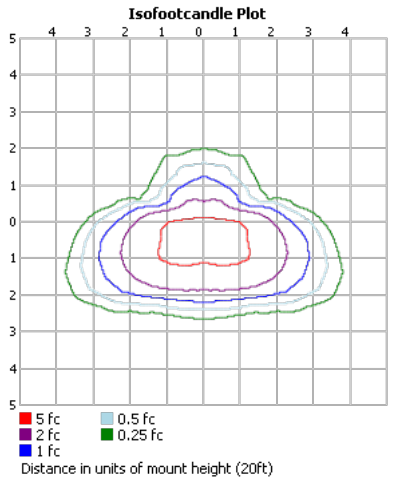

T4

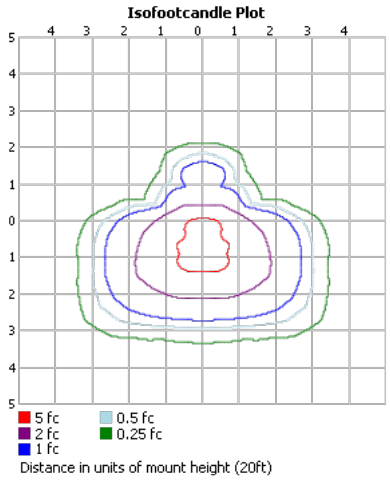

T5S

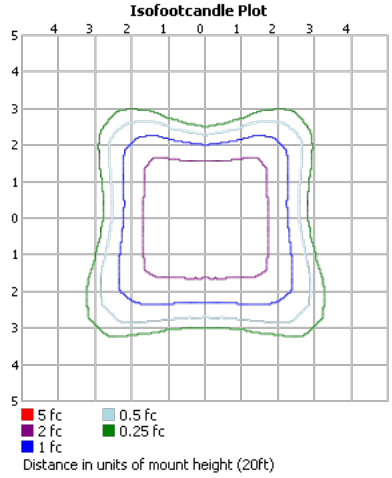

Project Name:	Part Number: SAS-15L-U-30-T2-UMB-BRZ	Type: A1

SLIM WALL PACK

LED ADJUSTABLE WALL PACK

407-478-3759
www.ilp-inc.com

FEATURES

- Low profile die-cast aluminum housing
- Bronze polyester powder coat finish (std.)
- Custom and factory select colors available[1]
- Isolated optical compartment with tempered glass lens and silicone gaskets
- 90° adjustable Type IV distribution or Optional IDA fixed model[2]
- Quick mount bracket standard for easy surface mount installation
- Three ½" coin plugs on sides for conduit or electronic photocell
- 120–277V Universal Voltage or 347V–480V High Voltage[3]
- Achieve code compliance with a fixed down PIR sensor with fully adjustable distribution aiming
- 0–10V Dimmable Driver (std.)
- Deep box 10W CEC Title 20 compliant battery backup & cold weather battery[1]
- Optional Field Adjustable Output device (FAO) allows individual luminaire lumen output control
- 3000K, 4000K & 5000K CCT Selectable via Integral selector
- >70 Color Rendering Index (CRI)
- Calculated L_{70} >100,000 hrs @ 25°C per TM-21-11
- IP65 Rated Luminaire
- 5 Year Warranty (std); 10 Year Warranty Optional
- ETL Listed for Wet Locations
- DesignLights Consortium® Premium Qualified Luminaire

[1]Contact factory for pricing and availability [2]Fixed 3000K CCT model only
[3]347–480V available in 5L, 8L, 10L Lumen Packages Only



Small Housing 2L - 3L



Large Housing 5L-10L
Shown with Sensor Box

*With FAO Option

SUITABLE APPLICATIONS

- Pedestrian Walkways
- Building Entrances
- Multi-use Facilities
- Industrial Facilities
- Parking Lots
- Storage Facilities
- Institutions
- Schools
- Loading Docks

ORDERING GUIDE:

SERIES	LUMENS	DRIVER	CCT	FINISH	WARRANTY
☑ **SWP** Slim Wall Pack	☐ **2L** ☐ **3L** ☑ **5L** ☐ **8L** ☐ **10L**	☑ **U** 120-277V ☐ **HV**[1] 347-480V	☑ **CCTS** Selectable CCT (5000K, 4000K, 3000K) ☐ **30**[3]	☑ **BRZ** Bronze ☐ **BLK**[4] Black ☐ **WHT**[4] White ☐ **SLV**[4] Silver	☑ **BLANK** 5 Year ☐ **10YR**[7,8] 10 Year

OPTIONS

Factory Installed		Ship with Accessories	
☐ **SP1**[2,6]	10kA Max Univolt Surge Protection	☐ **SWP-FAO10V**	Field Adjustable Output via 0-10V Wires
☐ **SP2**[2,6]	22kA Max 120–277V Surge Protector	☐ **SWP-ARM3-xxx**	Pole Mount Arm Kit, 3" long (xxx=BRZ, BLK, WHT, SLV)
☐ **IDA**[3]	Dark Sky IDA Fixture Seal of Approval	☐ **SWP-BPS-xxx**	18x9 Beauty Plate Kit, Small (xxx=BRZ, BLK, WHT, SLV)
☐ **LEDBB**[1,2]	10W UNIV Battery Backup (32°–100°F)	☐ **SWP-BPL-xxx**	18x9 Beauty Plate Kit, Large (xxx=BRZ, BLK, WHT, SLV)
☐ **LEDBBCT**[1,2]	20W UNIV CT Battery Backup (-4°–122°F)		
☐ **FAO**	Field Adjustable Output via 0-10V Wires		
Controls			
☐ **PCU**[2]	Electronic UNIV Photocell (120-277V)		
☐ **USBD/Lx**[5,9]	Bluetooth User Select Bi-Level Dim Occ. Sensor; (x= Mounting height; 2=8', 3=20')		

[1]5L, 8L, 10L Lumen Packages Only
[2]Not available with HV option
[3]Fixed to 3000K CCT and no angle adjustability for IDA Compliance. Must choose 30 CCT and IDA option to qualify
[4]Contact Factory for pricing and availablity
[5]Does not qualify for DLC
[6]SP1/SP2 specified in combination with battery backups, separate surge protectors are required per electrical line
[7]Contact Factory for more details
[8]Requires additional surge protection (SP1,SP2, SP480V2); For additional details see general terms and conditions
[9]Requires bluetooth enabled device for programming (provided by others)

QUICK SHIP ITEMS:

SERIES	LUMENS	DRIVER	COLOR	FINISH
☑ **SWP** Slim Wall Pack	☐ **2L** ☐ **3L** ☐ **5L** ☐ **8L** ☐ **10L**	☐ **U** 120-277V	☐ **CCTS** Selectable CCT (5000K, 4000K, 3000K)	☐ **BRZ** Bronze

SLIM WALL PACK

LED ADJUSTABLE WALL PACK

LED SYSTEMS INFO[1]	3000K			4000K			5000K			Watts[2]	Replaces	DLC Listing
Part Numbers	Lumens	Efficacy	BUG Rating	Lumens	Efficacy	BUG Rating	Lumens	Efficacy	BUG Rating			
SWP-2L-U-CCTS	2,445 lm	121 lm/W	B1-U0-G0	2,649 lm	139 lm/W	B1-U0-G0	2,493 lm	125 lm/W	B1-U0-G0	20 W	100W MH	Premium
SWP-3L-U-CCTS	3,125 lm	133 lm/W	B2-U0-G0	3,310 lm	145 lm/W	B2-U0-G0	3,226 lm	136 lm/W	B2-U0-G0	24 W	150W MH	Premium
SWP-5L-U-CCTS	5,323 lm	133 lm/W	B2-U0-G0	5,674 lm	147 lm/W	B2-U0-G0	5,515 lm	137 lm/W	B2-U0-G0	40 W	175W MH	Premium
SWP-8L-U-CCTS	8,173 lm	137 lm/W	B3-U0-G1	8,678 lm	150 lm/W	B3-U0-G1	8,455 lm	141 lm/W	B3-U0-G1	60 W	250W MH	Premium
SWP-10L-U-CCTS	10,092 lm	135 lm/W	B3-U0-G1	10,581 lm	147 lm/W	B3-U0-G1	10,335 lm	138 lm/W	B3-U0-G1	75 W	320W MH	Premium

[1]LED Chips are frequently updated therefore values are nominal
[2]Electrical data at 25C (77F). Actual wattage may differ by +/-10%.

SPECIFICATIONS

CONSTRUCTION

Slim Wall Pack luminaire features a sleek low-profile die-cast aluminum housing with matching housing styles for both a small and medium size housings. Slim Wall Pack is protected with a durable Bronze polyester powder coat finish to withstand extreme weather changes without cracking or peeling (Consult factory for availability of alternate finishes). The Adjustable head pivots up to 90° to allow for more forward throw illumination (IDA option eliminates the adjustability). Universal quick mount bracket eliminates the need to drill through the luminaire housing ensuring reliable IP65 ingress protection and fast hands-free mounting via hanging mechanism. One-piece silicone gasket seals door and back box.

ELECTRICAL

High-performance driver features over-voltage, under-voltage, short circuit and over temperature protection. 0-10V dimming (10% - 100%) standard. Standard Universal Voltage (120-277 Vac) Input 50/60 Hz or optional High Voltage (347-480 Vac). L70 >100,000 hrs. in accordance of IESNA TM-21-11 Projected values at 25°C Ambient temperature. Total harmonic distortion: <20%. Power factor: >0.90. Input power stays constant over life. Minimum 2.5kV surge rating. Optional Field Adjustable Output (FAO) accessory allows for individual lumen output control with 7 adjustable light levels per lumen package. 10W CEC Title 20 compliant battery backup & cold weather battery option available. 120-277V 10W CEC Title 20 compliant battery backup & cold weather battery options provide 90 minutes of constant power to the LED system, ensuring code compliance.

INSTALLATION

The Slim Wall Pack features a universal quick mount bracket, allowing for effortless installation to standard 31/2" to 4" round/octagonal, 4" square, single gang, masonry junction boxes or vertical surface mounting (secured by four lag bolts (supplied by others)). 1/2" NPT conduit entry points allow for surface-conduit or thru-branch wiring. Back box is an authorized electrical wiring compartment. Fixture leads exit the back of the casting through a poke-in water-tight grommet. Integral CCT selector allows for toolless CCT tuning at installation.

OPTICS

The isolated silicone sealed optical chamber utilizes a proprietary high-reflective white molded baffle. Optical assembly features an impact-resistant tempered glass lens and meets IESNA requirements for full cutoff compliance. Available in five lumen packages and CCT selectable via an integral CCT selector switch (3000K, 4000K, & 5000K). The Adjustable head pivots up to 90° to allow for more forward throw illumination. IDA option is fixed 3000K and does not allow for head pivoting (full-cutoff).

THERMAL

The Slim Wall Pack features an array of High-efficacy mid-power LED's on a metal core circuit board. The LED board is mounted directly to a cast aluminum housing with heat dissipating fins to provide excellent thermal performance extending the life of electronic components. Operating Ambient Temperature: -40°C to +40°C (-40°F to 104°F) Operating temperature for standard battery backup: 0°C to +50°C (+32°F to +122°F), Cold Weather battery backup: -20°C to +50°C (-4°F to +122°F).

CONTROLS

Three 1/2" NPT apertures allow for field or factory installed 120-277V universal electronic photocell.Optional PIR sensors available installed in added sensor housing (see page 3 for more details). Sensors provide optional on/off control, photocell capability, bi-level dimming, and bluetooth configuration allows for on-site modifications. (See page 4 for more information)

CERTIFICATIONS

UL Listed for wet locations. Tested in accordance with IESNA LM-79 and LM-80 standards.

WARRANTY

5 Year Warranty Standard; 10 Year Warranty Optional (Terms and Conditions apply).

SLIM WALL PACK

LED ADJUSTABLE WALL PACK

ADDITIONAL FEATURES & OPTIONS

Quick Mount Bracket



90° Adjustable Type IV Distribution



Optional Beauty Plate

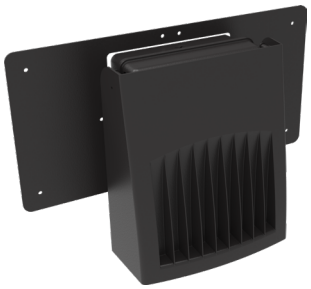

Optional Battery Pack



CONTROLS OPTIONS



USBD
Optional Bluetooth Programmable PIR sensor allows for Continuous Dimming, Motion and/or daylight harvesting, Fully adjustable high/low dimmed light levels, and Adjustable time delay/cutoff delay. The sensor is programmed via a free iOS® or Android® Sensor Configuration App (compatible device provided by others). Available in 8' or 20' mounting lenses. See coverage patterns below.

- Default settings:
- High Mode: 100% Output
- Low Mode: 10% Output
- Time Delay: 5 mins
- Cutoff: 1 hr
- Sensitivity: High
- Photocell: Disabled
- Continuous Dimming: Disabled



PCU
Three 1/2" apertures allow for field or factory installed 120-277V universal electronic pencil photocell.

COVERAGE PATTERN

USBD/L2

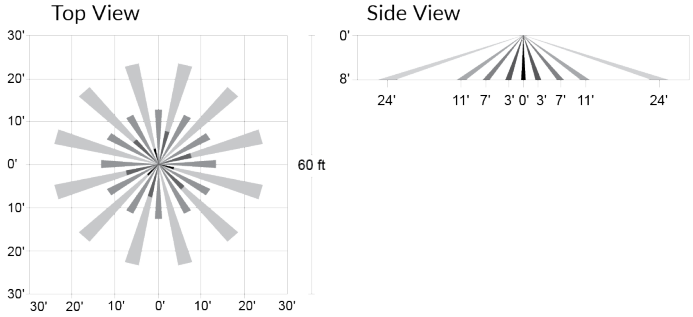

USBD/L3

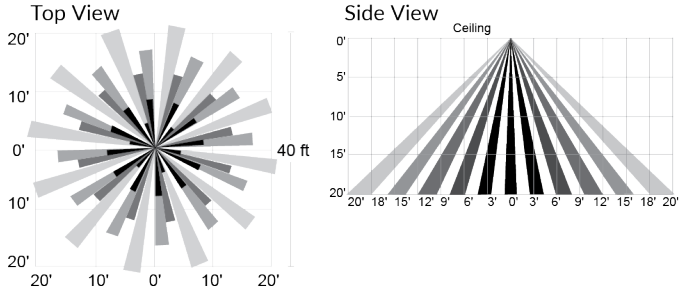

SLIM WALL PACK

LED ADJUSTABLE WALL PACK

LINE DRAWINGS

2L & 3L Small Housing

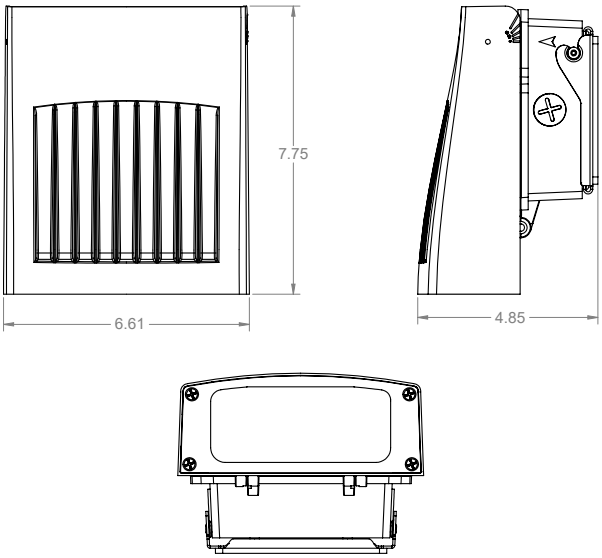

Large with Deep Box Cold Temp Battery Backup

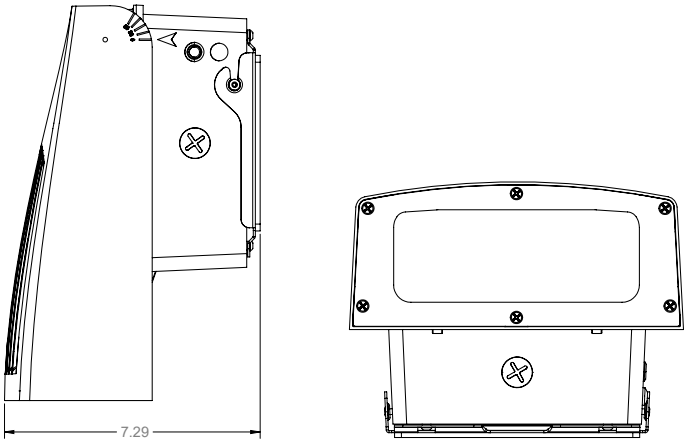

Large with Sensor Box

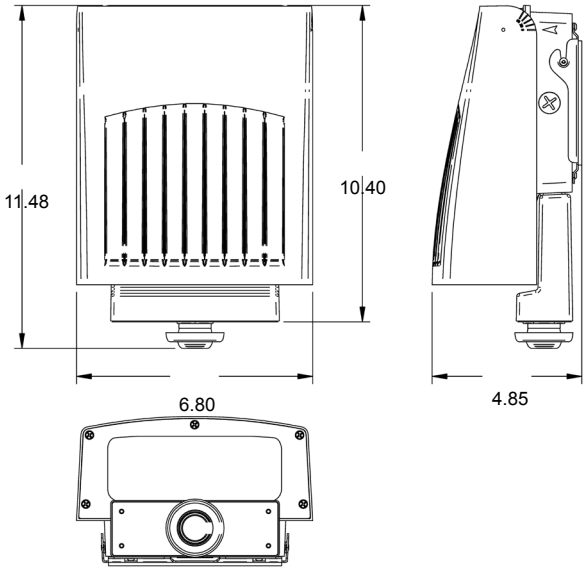

5L, 8L & 10L Large Housing

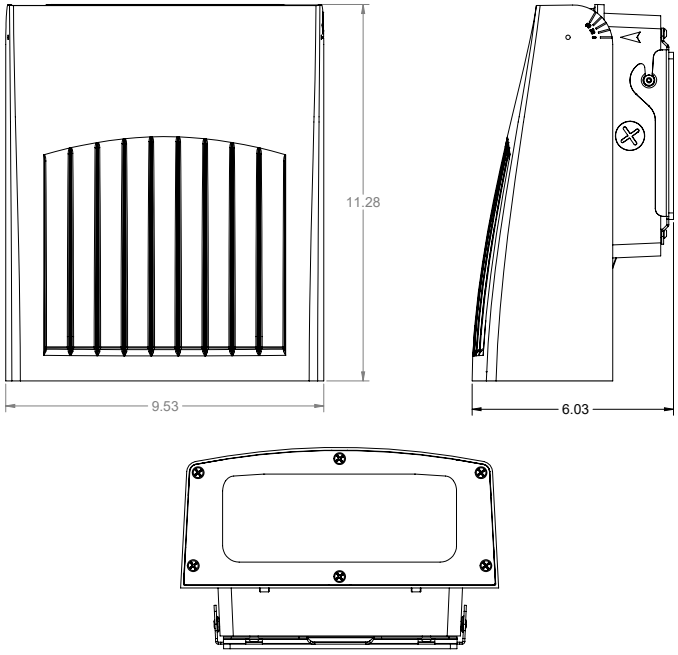

Small with Sensor Box

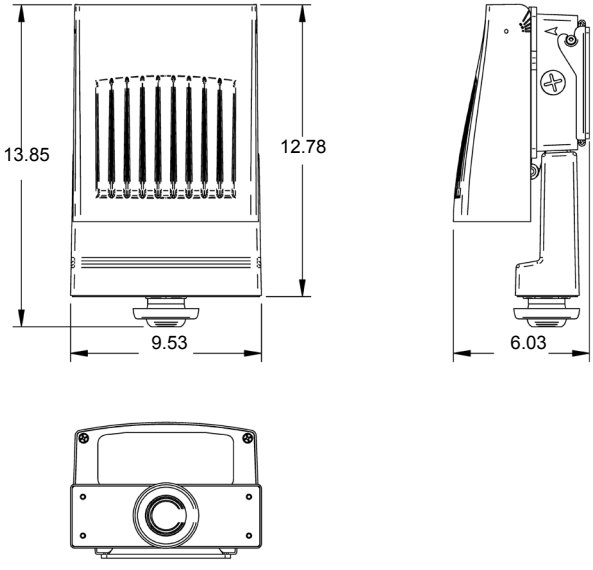

Project Name:	Part Number: SAS-15L-U-30-T2-UMB-BRZ	Type: A1

SQUARE CANOPY

LED CANOPY/PARKING GARAGE

407-478-3759
www.ilp-inc.com

FEATURES

- Rugged low-profile die-cast aluminum housing
- UV stabilized and impact resistant polycarbonate lenses
- Up to 3% uplight eliminates cave effect
- Quick mounting plate with hook on feature allow for easy installation
- Three 1/2" coin plugs on sides for conduit or photocell
- 4000K or 5000K Color Temperature; Consult Factory for Alternate CCTs
- >80 Color Rendering Index (CRI)
- 0-10V Dimmable Driver to 10%
- IP65 Rated Luminaire
- 120-277V Universal Voltage or 347-480V High Voltage
- Optional Microwave sensor for 360° occupancy detection
- Optional Universal Pencil Photocell
- 5 Year Warranty (std); 10 Year Warranty Optional
- UL Listed for Wet Locations
- DesignLights Consortium® Premium Qualified Luminaire



Diffuse Medium Lens



Parking Garage Wide Lens

SUITABLE APPLICATIONS

• Walkways • Building Perimeter/Security Lighting • Loading docks • Entrances • Stairways • Car Ports • Parking Garages

ORDERING GUIDE:

SERIES	LUMENS	DRIVER	CCT	LENS	FINISH	WARRANTY
☑ **CP** Square Canopy	☐ **3L** ☐ **5L** ☐ **7L** ☐ **9L**	☑ **U** 120-277V ☐ **HV** 347-480V	☑ **50**[10] ☑ **40**	☑ **BLANK** Diffuse Medium ☐ **PG** Parking Garage Wide	☑ **BLANK** Bronze ☐ **WHT**[5] White ☐ **BLK**[1] Black	☑ **BLANK** 5 Year ☐ **10YR**[3,4] 10 Year

OPTIONS		CONTROLS OPTIONS	
Factory Installed		Factory Installed	
☐ **CORD/6FT**	6ft 3-Conductor cord without a plug (120V-277V)	☐ **MWS**[2]	360° Microwave Motion Sensor (120-277V)
☐ **CORD/10FT**	10ft 3-Conductor cord without a plug (120V-277V)	☐ **USBD/Ly**[9]	Drop Nipple Mount user Select Bi-Level Dim Sensor - Bluetooth (y= Mounting Height 2=8' or 3=20')
☐ **SP1**[2,6]	10KA Max Univolt Surge Protector		
☐ **SP2**[2,6]	22KA Max Univolt Surge Protector	☐ **BDxx/Ly**	Drop Nipple Mount preset Bi-Level Dim Sensor (xx=% ex: 20,30) (y= Mounting Height 2=8' or 3=20')
☐ **SP480V2**	20kA Max 480V Surge Protector		
☐ **FUSE/SXXX**	Fuse - Single-line Voltage (120, 277 or 347) - Contact Factory	☐ **BDxxPC/Ly**	preset Bi-Level Dim Sensor w/ photocell (xx=% ex: 20,30) (y= Mounting Height 2=8' or 3=20')
☐ **FUSE/DXXX**	Fuse - Dual-line Voltage (208V, 240V or 480V) - Contact Factory		
☐ **EM5**[2,8]	Remote 5W 120-277V Battery backup	☐ **WLOS/Ly**	Drop Nipple Mount PIR Occupancy Sensor (y= Mounting Height 2=8' or 3=20')
☐ **EM7**[2,8]	Remote 7W 120-277V Battery backup		
☐ **EM10**[2,8]	Remote 10W 120-277V Battery backup		
☐ **EM12**[2,8]	Remote 12W 120-277V Battery backup		
☐ **LEDBBCT**[2,8]	Remote 14W 120-277V CT Battery backup (-4°-80°F)		
☐ **LEDBBCT7**[2,8]	Remote 7W 120-277V CT Battery backup (-4°-80°F)		
Ships with Accessories		Ships with Accessories	
☐ **CP-BP-xxx**	14x14 Beauty Plate Kit (xxx=BRZ, BLK, WHT, SLV)	☐ **PCU**[2,7]	Electronic UNIV Photocell (120-277V)

[1]Bronze/White finish standard, Consult factory for pricing & availability of other finishes; subject to longer lead-times.
[2]Not Available with HV Driver Options
[3]Contact Factory for more details
[4]Requires additional surge protection (SP1,SP2, SP480V2); For additional details see general terms and conditions
[5]Available in 3L, 5L, & 7L lumen packages & 4000K only. For alternates CCT or lumen packages consult factory for pricing and availability.
[6]SP1/SP2 specified in combination with Battery Backups, separate surge protectors are required per electrical line
[7]Not Available with MWS Driver Options
[8]Remote driver box required, see page 3 for more information. Not available in pendant mount.
[9]Requires bluetooth enabled device for programming (provided by others)
[10]Not available in 3L

QUICK SHIP ITEMS:

SERIES	LUMENS	DRIVER	CCT	FINISH
☑ **CP** Square Canopy	☐ **3L** ☐ **5L** ☐ **7L** ☐ **9L**	☑ **U** 120-277V	☐ **50**[2] ☐ **40**	☐ **BLANK** Bronze ☐ **WHT**[1] White

[1]Available in 3L, 5L, & 7L lumen packages & 4000K only. For alternates CCT or lumen packages consult factory for pricing and availability.
[2]Not Avilable in 3L

SQUARE CANOPY

LED CANOPY/PARKING GARAGE

LED SYSTEMS INFORMATION[1]		4000K			5000K				
Part Numbers	Lens	Lumens	Efficacy	DLC	Lumens	Efficacy	DLC	Watts[2]	Replaces
CP-3L	BLANK	3,450 lm	123 lm/W	PRM	N/A	N/A	PRM	28W	100W
CP-5L	BLANK	5,090 lm	127 lm/W	PRM	5,104 lm	128 lm/W	PRM	40W	150W
CP-7L	BLANK	7,328 lm	124 lm/W	PRM	7,730 lm	131 lm/W	PRM	59W	175W
CP-9L	BLANK	8,192 lm	124 lm/W	PRM	8,260 lm	125 lm/W	PRM	66W	250W
CP-3L	PG	3,819 lm	136 lm/W	PRM	N/A	N/A	PRM	28W	100W
CP-5L	PG	5,093 lm	127 lm/W	PRM	5,256 lm	131 lm/W	PRM	40W	150W
CP-7L	PG	7,602 lm	129 lm/W	PRM	7,926 lm	134 lm/W	PRM	59W	175W
CP-9L	PG	8,455 lm	128 lm/W	PRM	8,744 lm	132 lm/W	PRM	66W	250W

[1]Values are nominal, see IES file for more detail
[2]Electrical data at 25C (77F). Actual wattage may differ by +/-10%.

SPECIFICATIONS

CONSTRUCTION

Square Canopy luminaires feature a rugged low-profile die-cast aluminum housing with a durable Bronze or White polyester powder coat finish to withstand extreme weather changes without cracking or peeling (Consult factory for availability of alternate finishes). The UV stabilized and impact resistant polycarbonate lenses are designed to provide maximum rigidity and optical transmissions up to 92% . The lenses seal to the housing with a one-piece gasket creating an IP65 rating for maximum ingress protection.

ELECTRICAL

High-performance driver features over-voltage, under-voltage, short-circuit and over temperature protection. 0-10V dimming (10% - 100%) standard. Standard Universal Voltage (120-277 Vac) Input 50/60 Hz or optional High Voltage (347-480 Vac). L70 >50,000 hrs. in accordance of IESNA TM-21-11 Projected values at 25°C Ambient temperature. Total harmonic distortion: <20%. Power factor: >0.90. Input power stays constant over life. Minimum 2.5kV surge rating. See page 3 for 90 min remote battery backup information.

INSTALLATION

The Square Canopy luminaires feature an integral quick surface mount bracket, eliminating the need to open the luminaire during installation to the Junction box or ceiling surface resulting in IP65 ingress protection that is effortless and secure. Three 1/2” conduit entry points allow for surface-conduit wiring. The CP can also be pendant mounted with ¾ pendant stems (provided by others). Fixture leads exit the back of the casting through a water-tight connector.

WARRANTY

5 Year Warranty Standard; 10 Year Warranty Optional (Terms and Conditions apply).

OPTICS

Square Canopy ships standard with a diffuse prismatic lens that virtually eliminates glare and optimizes the delivered light for maximum visual comfort. The Square Canopy is also available with an optional prismatic wide distribution lens that is designed specifically to maximize fixture spacing for parking garage applications. Available in 4000K or 5000K color temperature (CCT) per ANSI C78.377. Consult factory for availability of alternate CCTs.

THERMAL

The Square Canopy features an array of High-efficacy LED's on a metal core circuit board. The LED board is mounted directly to a cast alluminum housing with heat dissipating fins to provide excellent thermal performance extending the life of electronic components. Operating Ambient Temperature: -40°C to +40°C (-40°F to 104°F)

CONTROLS

Optional Microwave sensor available for 360 degree motion detection discretely installed behind the polycarbonate lens. The MWS is pre-configured to the unique site application requirements; See page 3 for more details. Three 1/2” aperatures allow for field or factory installed 120-277V universal electronic photocell.

Optional Drop nipple Bluetooth PIR sensors available installed off the side of the housing. Sensors provide optional on/off control, photocell capability, bi-level dimming, and bluetooth capability allows for onsite modifications (Provided by others)

CERTIFICATIONS

UL Listed for wet locations. DesignLights Consortium® (DLC) Premium qualified product and DLC qualified product. Not all versions of this product may be DLC Premium qualified or DLC qualified. Please check the DLC Qualified Products List at www.designlights.org/QPL to confirm which versions are qualified. Title 24 Compliant with MWS option; see local ordinance for qualification information. Tested in accordance with IESNA LM-79 and LM-80 standards.

SQUARE CANOPY

LED CANOPY/PARKING GARAGE

CONTROLS OPTIONS

Drop Nipple Sensor

USBD
User Selectable Bi-Level Dimming. Allows the end user to manually select the unoccupied dimming level. Once motion is detected, the fixture will return to 100% light output. Sensor mounted off side of fixture.

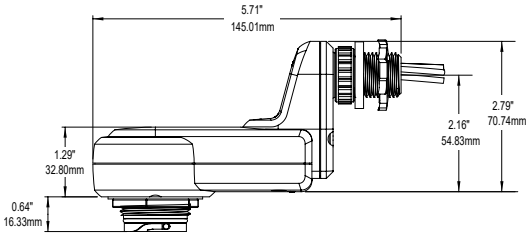

BDxx
Factory set Bi-Level Dimming. Sensor is set to dim level, as indicated in the "xx" portion of the part number, when the area is unoccupied. Example: BD20 sets the fixture to dim down to 20% lumen output when the area is unoccupied. Once motion is detected, the fixture will return to 100% light output. Sensor mounted off side of fixture.

BDxxPC
Factory set Bi-Level Dimming with motion and photocell. Sensor is set to dim level, as indicated in the "xx" portion of the part number, when the area is unoccupied and will not return to 100% light output unless 1. motion is detected and 2.the light level is below the preset level. Example: BD20PC sets the fixture to dim down to 20% lumen output when the area is unoccupied and will not return to 100% light output unless the above conditions are met for both motion and light level readings. Sensor mounted off side of fixture.

WLOS
Wet location rated occupancy sensor for on/off function only. Sensor mounted off side of fixture.

MWS Occupancy Sensor

The integral microwave occupancy sensor activates switching of luminaire light levels. The Microwave occupancy sensor is discretely installed behind the polycarbonate lens and is available for universal (120-277V) only. Standard Factory settings: High level light is activated and increased to full bright upon detection of motion. Low light level (10% maximum drive current) is activated when target zone is absent of motion activity for ~3 minutes. Detection Area: 100%, Standby Time: Disabled, Daylight Sensor: Disabled. See coverage diagram for detection cone. Consult Factory for alternate settings.

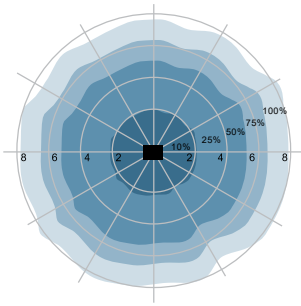

Ceiling mounting pattern (Unit: Ft)
Suggested installation height: 9 - 33ft

PCU

Three 1/2" apertures allow for field or factory installed 120-277V universal electronic pencil photocell.



LINE DRAWINGS

Diffuse Medium Lens

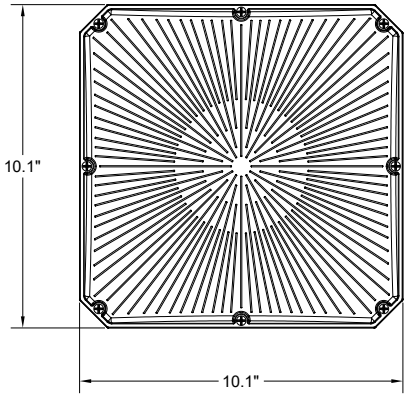

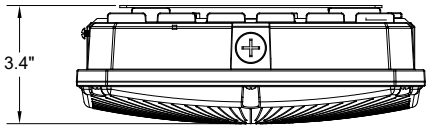

Parking Garage Wide Lens

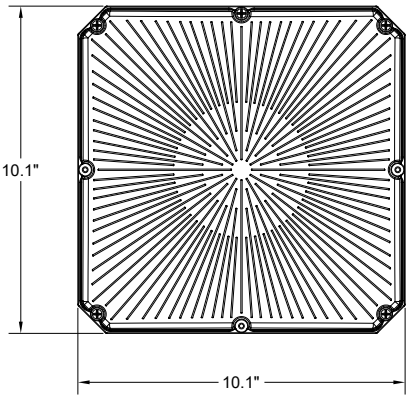

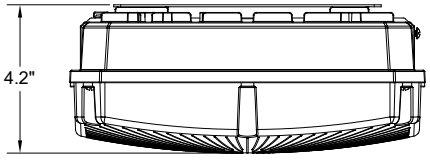

Remote Driver Box

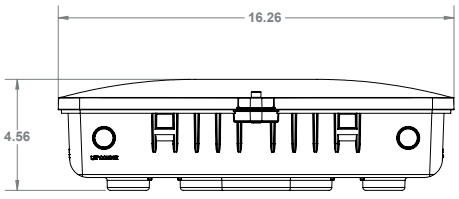

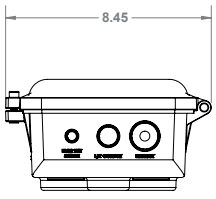

Only available in surface mount; Box must mount near the luminaire. The remote box is provided with a 6' power cord and a 3' liquid tight flexible conduit connects the remote box to the luminaire. Power will be ran to the remote box and will pass to the Canopy through the side knockouts.

APPLICATION—SITE PLANS, SUBDIVISIONS & RECORD PLANS
CITY OF SPRINGBORO PLANNING COMMISSION

☒ SITE PLAN ☐ REVISION TO APPROVED SITE PLAN ☐ CONCEPT PLAN ☐ PRELIMINARY SUBDIVISION ☐ RECORD PLAN

The undersigned requests the approval identified above. Site Plan Review approvals subject to expiration provided for in Section 1284.18 of the Planning and Zoning Code. For all approvals under this application, it is understood that it shall only authorize the approval described in this application, subject to any conditions or safeguards required by the Planning Commission, and/or City Council.

❑ Owner
☒ Agent
❑ Lessee
❑ Signed Purchase Contract

APPLICANT NAME: Jennifer Cahill Berardi+ Partners

Address: 1398 Goodale Blvd
Columbus, Ohio 43212

Telephone No. (614) 221-1110

Fax No. (614) 386-3852

Email Address: jcahill @berardipartners.com

PROPERTY OWNER NAME (IF OTHER): River Valley Credit Union

Address: 505 Earl Blvd
Miamisburg, Ohio 45342

Telephone No. (937) 741-7178

Property Address or General Location: 25 West Central Avenue

Parcel Number(s): _____ Zoning District: UVD

Proposed Use: Response Letter from March/April Meeting ; Contact Jennifer Cahill, AIA, Project Manager

The applicant or representative who is authorized to speak on behalf of the request must also be present at all meetings.

Jennifer Cahill
(Signature of Applicant and/or Agent)

06/21/2023
(Date)

Jennifer Cahill, AIA, Project Manager
Printed Name

June 23, 2023

Springboro Planning Commission: Zoning Response and Revised Information Letter

TO: Dan Boron, City Planner
City of Springboro Planning Commission Meeting

RE: **River Valley Credit Union**
25 West Central Ave., Springboro, Ohio, 45066
Comment Items and requested confirmations: April/March 2023 Meeting Responses

In response to the email comments dated 03/08/2023 and 04/12/2023, the following responses, drawings and documents have been provided as requested and as previously discussed at the meetings by the testimony of Joe Youst, who was in attendance on behalf of Berardi + Partners, LLC. Additionally, please see the specific East Elevation Glazing proposal to use additional "fritted" non-illuminated glass panels below actual clerestory glazing, to remedy the desired intent for verticality and % in the required comment solution. We have also provided a site ariel projection line to intimate the approximate relationship frontage extent of the proposed building on the North property as projected from the Foreign Exchange building precedent.

COMMENTS ***March 08, 2023***

1. Provide pre- and post-development impermeable surface calculations. Also why is so much impermeable area proposed in the vicinity of the building that would potentially impact the need for on-site detention?
    a. **Response:** This information is provided on the C-series sheet- and the total impervious area is reduced from the existing condition on the site from the previous use and areas. No storm detention.

2. Provide building population information to determine parking demand for property.
    a. **Response:** Maximum occupancy is 29. See Sheet A101 excerpted diagram plan attached.

3. The building setback on the SR 73 frontage to be 0 feet; suggest moving the proposed building closer to the street and relocating the proposed picnic area to another area of the site.
    a. **Response:** As stated and discussed via Joe Youst's testimony in person during the March meeting, we cannot accommodate a shift in the building placement, the zero setback and foundation line as have been indicated on the C-series sheet tables and list the associated setbacks- The exterior amenity space and tables, if this is a directive- can try to be redesigned and accommodated in next round. Deferred with further clarification or input for our understanding is requested. See attached Landscape plan L-1.0 also for content and scope.

4. Revise plans to depict accurately property line configuration and provide setback dimensions.
    a. **Response:** See C-series sheet tables and list the associated setbacks-

5. Provide dimensions to property line for proposed sign and accessory structure on Florence Drive frontage.
    a. **Response:** Civil C-series Sheet/s have been revised.

6. Revise east (Florence Drive) and south elevations to meet four-sided architecture requirement. See UVD Section 1267.08(a)(1) (typical citation through comment #13), and orientation to street requirements. Section 1267.08(a)(2).
    a. **Response:** See Item #9 below.

7. Windows on east elevation to meet vertical orientation requirement. Section 1267.08(a)(3). Also verify all glass to meet material requirements. Section 1267.08(a)(4).

a. **Response:** See Item #9 below.

8. Indicate proposed building materials on concept elevations, including accessory structures, screening walls, and sign structures, for compliance with Section 1267.08(a)(5) and Section 1267.08(a)(7).

a. **Response:** We have excerpted the materials images directly onto the concept sketch sheets to help illustrate the complimentary nature of the materials, as a whole concept, and as applied to the building and accessory ITM structure and monument signage. This should help illustrate the intent of the materials previously indicated separately.

9. North (West Central Avenue) and east (Florence Drive) elevations to meet 65% opacity requirement. Section 1267.08(a)(10).

a. **Response:** Please note we believe the primary North façade, (West Central Ave), setting the building with glass and glazing/door systems does meet the intent of the 65% opacity requirement. Please see the revised East Elevation, which has been designed with additional, vertical panels of "fritted" non-illuminated glazing to meet the intent of the verticality of fenestration; (the upper most clerestory horizontal glazing panels are still window systems allowing translucent daylighting to the spaces inside), as previously indicated at toilet rooms and cabinetry walls on the interior side of the spaces. Note, we propose "fritted" a glazing system, as allowed in the UDG as cited to keep privacy in the toilet rooms on the interior side, and to have the ability to provide blocking at furred wall systems where we have work room/office wall cabinetry and workstations. We hope this revision meets the spirit of the intended fenestration required.

10. Landscaping to be reviewed following preliminary review of site plan in light of Section 1267.09 and Chapter 1279, Landscaping.

a. **Response:** Please see the attached Landscape Plan L-1.0.

11. Provide lighting plan following preliminary review consistent with Chapter 1273, Exterior Lighting, and Section 1267.10 including photometric analysis, color temperatures not to exceed 3500k, cut-off fixtures, and more. Lighting plan should also consider architectural, security, and pathway lighting.

a. **Response:** See revised Sheet ES.101.

12. Signage plan to be reviewed by Zoning Inspector for compliance with Chapter 1281, Signs.

a. **Response:** Understood. See attached monument sign detail and elevation for review, Sheet A606.

13. Screen all ground- and building-mounted ancillary facilities. Section 1267.14.

b. **Response:** Please see the attached Landscaping Plan L-1.0.

14. Extend curb and gutter to south property line, with storm sewer and add public sidewalk easement.

a. **Response:** This scope has been revised accordingly, see C-series sheet/s.

15. Provide new water lateral and sewer lateral details. Other engineering comments reserved until the submission of engineered design drawings.

a. **Response:** This scope has been revised accordingly, see C-series sheet/s.

16. We will require the purchase and installation of a Knox Box to be installed and located at the front entrance of the facility.

a. **Response:** Coded Note 5; indicates the "knox box" requirement and location at the entrance wall of the facility. See excerpted plan diagram Sheet A101 attached.

17. A fire extinguisher plan must be submitted to the Clearcreek Fire District. Placement and installation must be completed prior to final building inspection.

a. **Response:** Coded Note 1; indicates the preliminary location of the 10lb, ABC Fire Extinguisher and cabinet, conspicuously placed off the lobby and withing the egress path/approach of the lobby. See excerpted plan diagram Sheet A101 attached.

18. A scaled floor plan is required at or before time of final building inspection showing occupant load, location of exits, electrical and gas shut off, fire department connections and other applicable information as may be useful in conducting pre-incident preparation by the Clearcreek Fire District. The acceptable size of the plan is 8.5 inches by 11 inches.

a. **Response:** See excerpted plan diagram Sheet A101 attached, which is a scaled floor plan, indicating 29 maximum occupants for this use group, and can be used to demarcate the required shut-offs and or connections. The current plan addresses coded note #1 and #5, from items 16/17 of the comments issued.

19. Building requires a minimum of 4" contrasting address numbers near main entrance. Must be visible from the road.

a. **Response:** Understood. This can and will be coordinated as such with the AHJ/Fire District.

20. All testing of all systems shall be scheduled through the Springboro Building Department at (937) 748-9791. All test shall be scheduled 48 hours in advance of testing. The Fire Marshal or Fire District representative will witness all testing.

a. **Response:** Understood.

COMMENTS ***April 12, 2023***

1. Approval is conditioned on the redevelopment of the remainder of the site for a new branch office as soon as practicable through the City of Springboro's site plan review process.
   a. **Response:** Understood

2. Verify material match between proposed ATM/ITM building and new branch location (to be reviewed separately).
   a. **Response:** We have excerpted the materials images directly onto the concept sketch sheets to help illustrate the complimentary nature of the materials, as a whole concept, and as applied to the building and accessory ITM structure and monument signage. This should help illustrate the intent of the materials previously indicated separately.

3. Extend curb and gutter to south property line, with storm sewer and add public concrete sidewalk the entire length. Create a concrete apron section for the curb cuts to include sidewalk. Dedicate additional right-of-way to include the curb and gutter section and sidewalk.
    a. **Response:** This scope has been revised accordingly, see C-series sheet/s.

4. Provide proposed water lateral and sewer lateral details.
    a. **Response:** This scope has been revised accordingly, see C-series sheet/s.

5. Other engineering comments reserved until the submission of engineered design drawings.
    a. **Response:** Understood

6. Provide pre- and post-impervious area to verify the need for storm water detention.
    a. **Response:** This information is provided on the C-series sheet- and the total impervious area is reduced from the existing condition on the site from the previous use and areas. No storm detention.

7. Tie down location of ATM/ITM. Move the structure at least 10 feet away from existing storm sewer.
    a. **Response:** We have shifted the ITM structure roughly 24" to move the foundation of the corner column system away from the deep storm line on site to help accommodate this. The ITM structure was over 16ft away in the previous plan proposal. see C-series sheet/s.

8. Add directional arrow pavement marking for drive through aisles.
    a. **Response:** Arrow symbols and signage scope have been provided at the drive aisles. see C-series sheet/s.

9. Please see comments from March 8th Planning Commission regarding the overall site plan for the new branch office.
    a. **Response:** Understood, some appear repetitive, some are new.

Prepared by:



Steven Gagliardi, NCARB, AIA
Project Manager
Berardi + Partners LLC.
(614) 221-1110
sgagliardi@berardipartners.com

CLIENT: RIVER VALLEY CREDIT UNION

PROJECT: SPRINGBORO, OH

TITLE: CONCEPT DRAWINGS

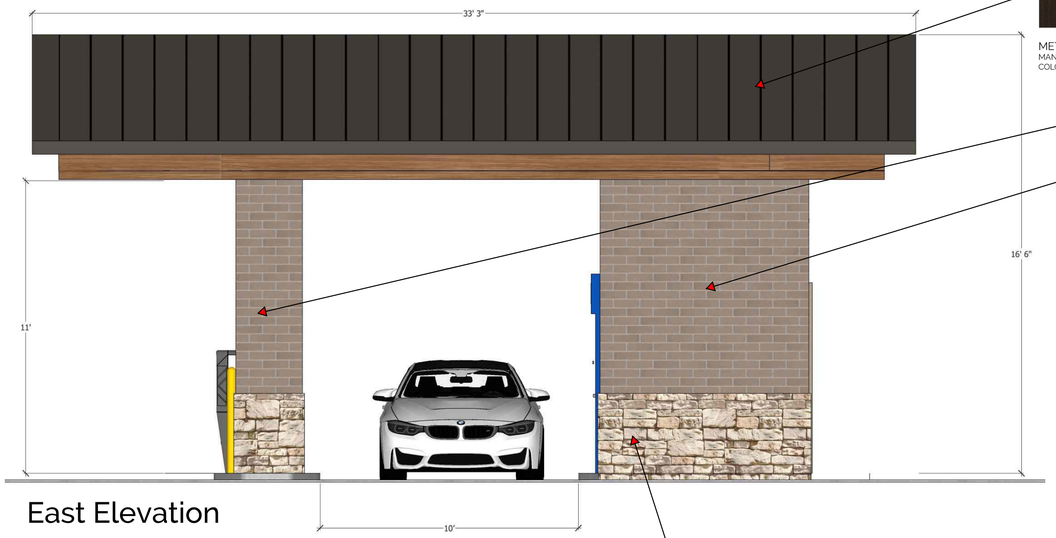

East Elevation



METAL SEAM ROOF & FLASHING
MANUFACTURER: DYNACLAD
COLOR: CLASSIC BRONZE

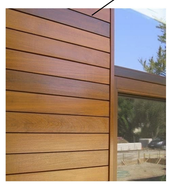

HIGH-GRADE ALUMINUM PANELS
MANUFACTURER: LONGBOARD ARCHITECTURAL PRODUCTS
COLOR: DARK BAMBOO

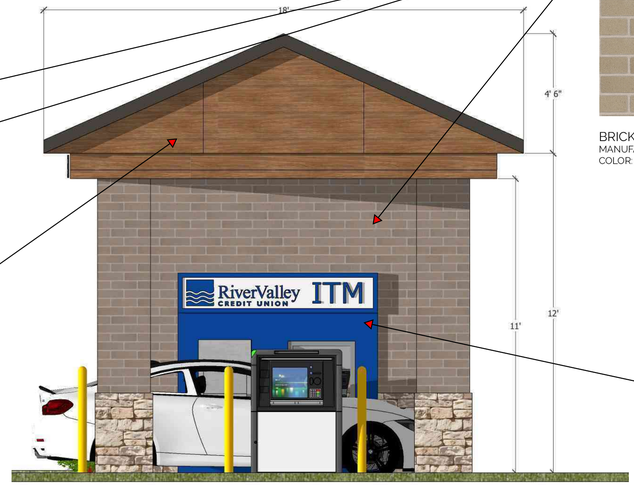

South Elevation

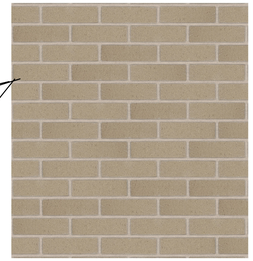

BRICK
MANUFACTURER: GLEN GERY
COLOR: PEARL RIVER



METAL CANOPY
MANUFACTURER: RAL 5017
COLOR: CUSTOM BLUE METAL

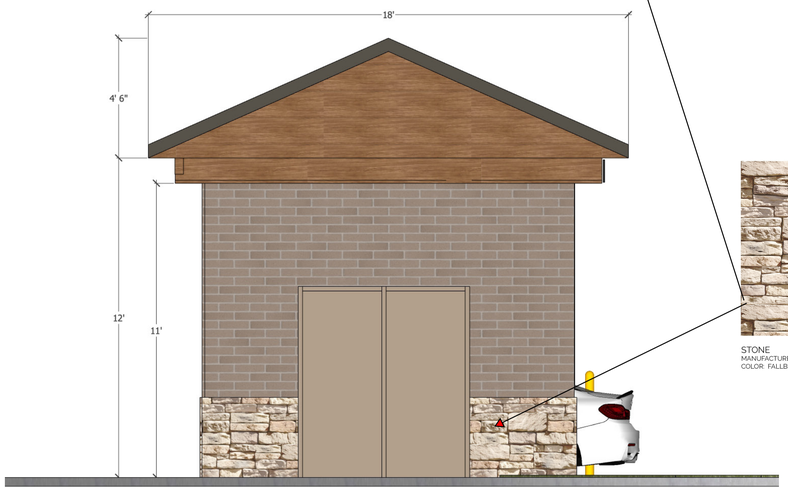

North Elevation



STONE
MANUFACTURER: DUTCH QUALITY STONE
COLOR: FALLBROOK

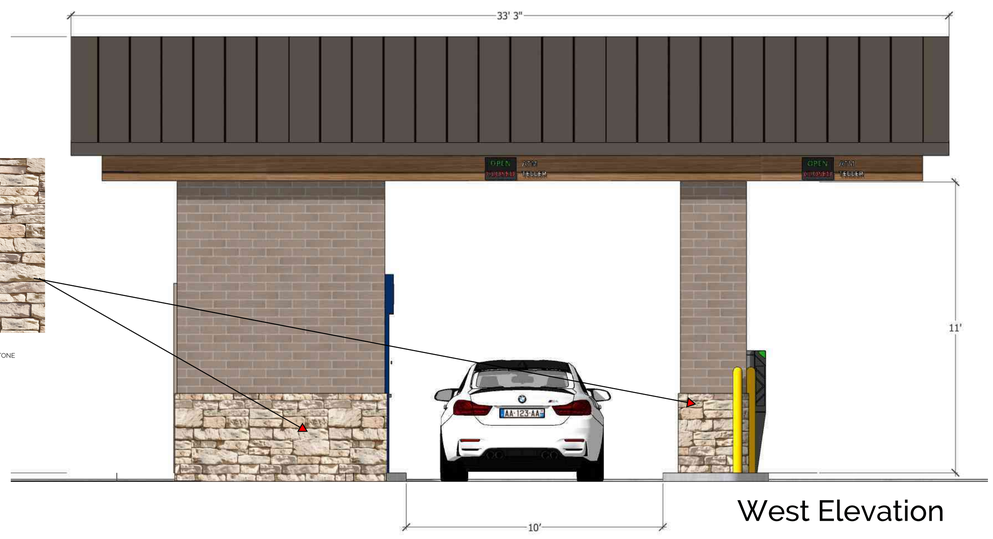

West Elevation

Drive Thru Canopy Elevations

structurefirst

dhcreative
branded environments | design strategy

BERARDI+

06.23.2023

RENDERING IS FOR CONCEPTUAL AND REPRESENTATIONAL PURPOSES ONLY. © 2023 DH CREATIVE LLC.

CLIENT: RIVER VALLEY CREDIT UNION

PROJECT: SPRINGBORO, OH

TITLE: CONCEPT DRAWINGS





HIGH-GRADE ALUMINUM PANELS
MANUFACTURER: LONGBOARD ARCHITECTURAL PRODUCTS
COLOR: DARK BAMBOO



RAL 5017
TRAFFIC BLUE

METAL CANOPY
MANUFACTURER: RAL 5017
COLOR: CUSTOM BLUE METAL

BRICK
MANUFACTURER: GLEN GERY
COLOR: PEARL RIVER

METAL SEAM ROOF & FLASHING
MANUFACTURER: DYNACLAD
COLOR: CLASSIC BRONZE

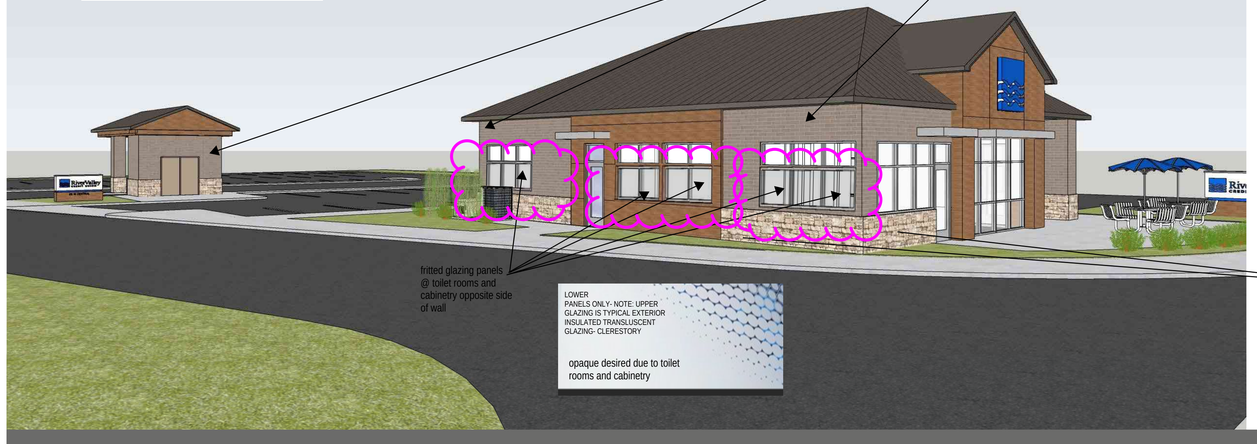



STONE
MANUFACTURER: DUTCH QUALITY STONE
COLOR: FALLBROOK

Exterior Perspective Renderings

structurefirst

dh creative
branded environments | design strategy

BERARDI+

06.23.2023

RENDERING IS FOR CONCEPTUAL AND REPRESENTATIONAL PURPOSES ONLY. © 2023 DH CREATIVE LLC.

CLIENT: RIVER VALLEY CREDIT UNION

PROJECT: SPRINGBORO, OH

TITLE: CONCEPT DRAWINGS

East Elevation



South Elevation



Concept Elevations

structurefirst

dh creative
branded environments | design strategy

BERARDI+

06.23.2023

RENDERING IS FOR CONCEPTUAL AND REPRESENTATIONAL PURPOSES ONLY. © 2023 DH CREATIVE LLC.

CLIENT: RIVER VALLEY CREDIT UNION

PROJECT: SPRINGBORO, OH

TITLE: CONCEPT DRAWINGS



North Elevation



West Elevation

Concept Elevations

structurefirst

dhcreative
branded environments | design strategy

BERARDI+

06.23.2023

RENDERING IS FOR CONCEPTUAL AND REPRESENTATIONAL PURPOSES ONLY. © 2023 DH CREATIVE LLC.

CLIENT: RIVER VALLEY CREDIT UNION
PROJECT: SPRINGBORO, OH
TITLE: CONCEPT DRAWINGS



STONE
MANUFACTURER: DUTCH QUALITY STONE
COLOR: FALLBROOK



BRICK
MANUFACTURER: GLEN GERY
COLOR: PEARL RIVER

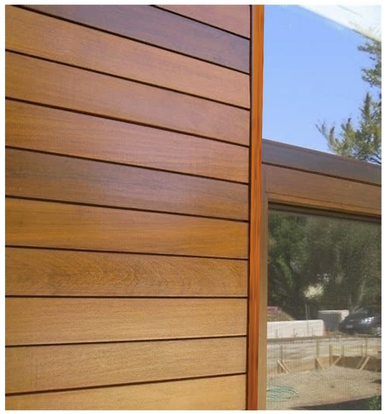

HIGH-GRADE ALUMINUM PANELS
MANUFACTURER: LONGBOARD ARCHITECTURAL PRODUCTS
COLOR: DARK BAMBOO



METAL CANOPY
MANUFACTURER: RAL 5017
COLOR: CUSTOM BLUE METAL



STOREFRONT
MANUFACTURER: KAWNEER OR TUBELITE
COLOR: CLEAR ANODIZED



CAST STONE
MANUFACTURER: ROCK CAST
COLOR: CHARLOTTE TAN



METAL SEAM ROOF & FLASHING
MANUFACTURER: DYNACLAD
COLOR: CLASSIC BRONZE

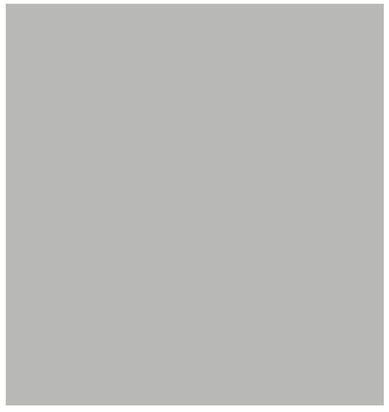

METAL CANOPY
MANUFACTURER: DYNACLAD
COLOR: DOVE GRAY

Exterior Material Board

structurefirst

dhcreative
branded environments | design strategy

BERARDI+

06.23.2023

RENDERING IS FOR CONCEPTUAL AND REPRESENTATIONAL PURPOSES ONLY. © 2023 DH CREATIVE LLC.

ITEM
#17 OF MARCH 8,2023
ADDRESSED ALREADY IN
FLOOR PLAN

ITEM
#16 OF MARCH 8,2023
ADDRESSED ALREADY IN
FLOOR PLAN

⟨X⟩ coded notes:

1. PROVIDE 10LB ABC DRY CHEMICAL" FIRE EXTINGUISHER IN SEMI RECESSED CABINET, MOUNT HANDLE @ 40" A.F.F.
2. INSTALL A.D.A. 'RESTROOM' TACTILE SIGNAGE. REFER TO INTERIORS AND SPECIFICATIONS 'RCL' LINE UNISEX DESIGNATION SIGN BY INTERSIGN CORPORATION OR EQUAL TO BE POSTED OUTSIDE PUBLIC TOILET ROOM. SIGN LOCATION AND CHARACTERISTICS TO COMPLY WITH ICC/ANSI A117.1 SECTION 703.
3. LOCATION OF FILTERED WATER DISPENSER BY OWNER, SEE PLUMBING DRAWINGS
4. INSTALL CEMENT BACKER BOARD THIS WALL IN LIEU OF DRYWALL FOR APPLIED TILE OR STONE
5. KNOX BOX LOCATION. INSTALL PER MANUFACTURER'S WRITTEN INSTRUCTIONS AND COORDINATE WITH LOCAL FIRE AUTHORITY.
6. INSTALL BLOCKING AND CONDUIT FOR CABLE AND POWER SUPPLY IN WALL FOR MONITOR/TV. COORDINATE HEIGHT WITH OWNER.
7. REFER TO ELECTRICAL PLANS FOR INSTALLATION LOCATION OF 4'X8'X3/4" PLYWOOD SHEATHING FOR TELECOMMUNICATIONS EQUIPMENT, PAINT TO MATCH ADJACENT WALL
8. PROVIDE BLOCKING AND HEADER AS REQUIRED FOR FUTURE NIGHT DROP INSTALLATION
9. OFCI COIN MACHINE, INSTALL PER MANUFACTURER'S WRITTEN INSTRUCTIONS
10. OFCI SAFE, COORDINATE EXACT LOCATION WITH OWNER PRIOR TO INSTALLATION
11. REFER TO ELECTRICAL PLANS FOR LOCATION OF ADA PUSH BUTTON OPERATORS
12. FRAMELESS TEMPERED GLASS WALL TO 8'-9" A.F.F., SEE WINDOW TYPES SHEET A701 SPECIFICATIONS FOR ADDITIONAL INFORMATION
13. REFER TO PLUMBING DRAWINGS FOR LOCAITON OF WATER METER & WATER HEATER
14. FLOOR DRAIN, - SEE PLUMBING DOCUMENTS
15. REFRIGERATOR - SEE INTERIOR ELEVATIONS AND SPECIFICATIONS - CONFIRM CLEARANCE PRIOR TO ORDERING.

NOTE:
CODED NOTES APPLY TO THE ENTIRE BUILDING. INDIVIDUAL IDENTIFICATION IS FOR REFERENCE ONLY.

wall schedule

type	Description
W1A	INTERIOR WALL - 2X4 WOOD STUDS @ 16" O.C. W/ SOUND BATT INSULATION AND 5/8" GYP. BOARD BOTH SIDES EXTEND TO ROOF TRUSS BOTTOM CHORD
W1B	INTERIOR WALL - 2X4 WOOD STUDS @ 16" O.C. W/ 5/8" GYP. BOARD BOTH SIDES EXTEND TO ROOF TRUSS BOTTOM CHORD
W1C	INTERIOR WALL - 2X6 WOOD STUDS @ 16" O.C. W/ SOUND BATT INSULATION, EXTEND TO UNDERSIDE OF TRUSSES
W1D	EXTERIOR - 2X6 WOOD STUDS @ 16" O.C. W/ SOUND BATT INSULATION, REFER TO WALL SECTIONS FOR ADDITIONAL INFORMATION
W1E	1/2" FRAMELESS GLASS WALL SYSTEM - C.R. LAURENCE 10 2000 CRL CASCADE OR SIMILAR

air leakage

IN ACCORDANCE WITH ASHRAE 90.1-04 (5.4.3.1)

BUILDING ENVELOPE SEALING, THE FOLLOWING AREAS OF THE BUILDING ENVELOPE SHALL BE SEALED, CAULKED, GASKETED, OR WEATHER-STRIPPED TO MINIMIZE AIR LEAKAGE:

A. JOINTS AROUND FENESTRATION AND DOOR FRAMES.
B. JUNCTIONS BETWEEN WALLS AND FOUNDATIONS, BETWEEN WALLS AT BUILDING CORNERS, BETWEEN WALLS AND STRUCTURAL FLOORS OR ROOFS, AND BETWEEN WALLS AND ROOF OR WALL PANELS.
C. OPENINGS AT PENETRATIONS OF UTILITY SERVICES THROUGH ROOFS, WALLS, AND FLOORS.
D. SITE-BUILT FENESTRATION AND DOORS.
E. BUILDING ASSEMBLIES USED AS DUCTS OR PLENUMS.
F. JOINTS, SEAMS, AND PENETRATIONS OF VAPOR RETARDERS.
G. ALL OTHER OPENINGS IN THE BUILDING ENVELOPE.

general notes:

1. REFERENCE CIVIL PLANS FOR ACTUAL FINISHED FLOOR ELEVATION. REFERENCE POINT OF 100.0' USED ON ARCHITECTURAL DRAWINGS FOR FINISHED FLOOR ELEVATION.
2. ALL DIMENSIONS ARE TO FACE OF STUD U.N.O.
3. MOISTURE-RESISTANT GYPSUM BOARD (PAPERLESS BOARD) OR EQUIVALENT ENTIRE CEILING OUTSIDE ATM ENCLOSURE
4. EXTERIOR DIMENSIONS ARE TO OUTSIDE FACE OF SHEATHING (BLOCK FOUND TOP) TYPICAL

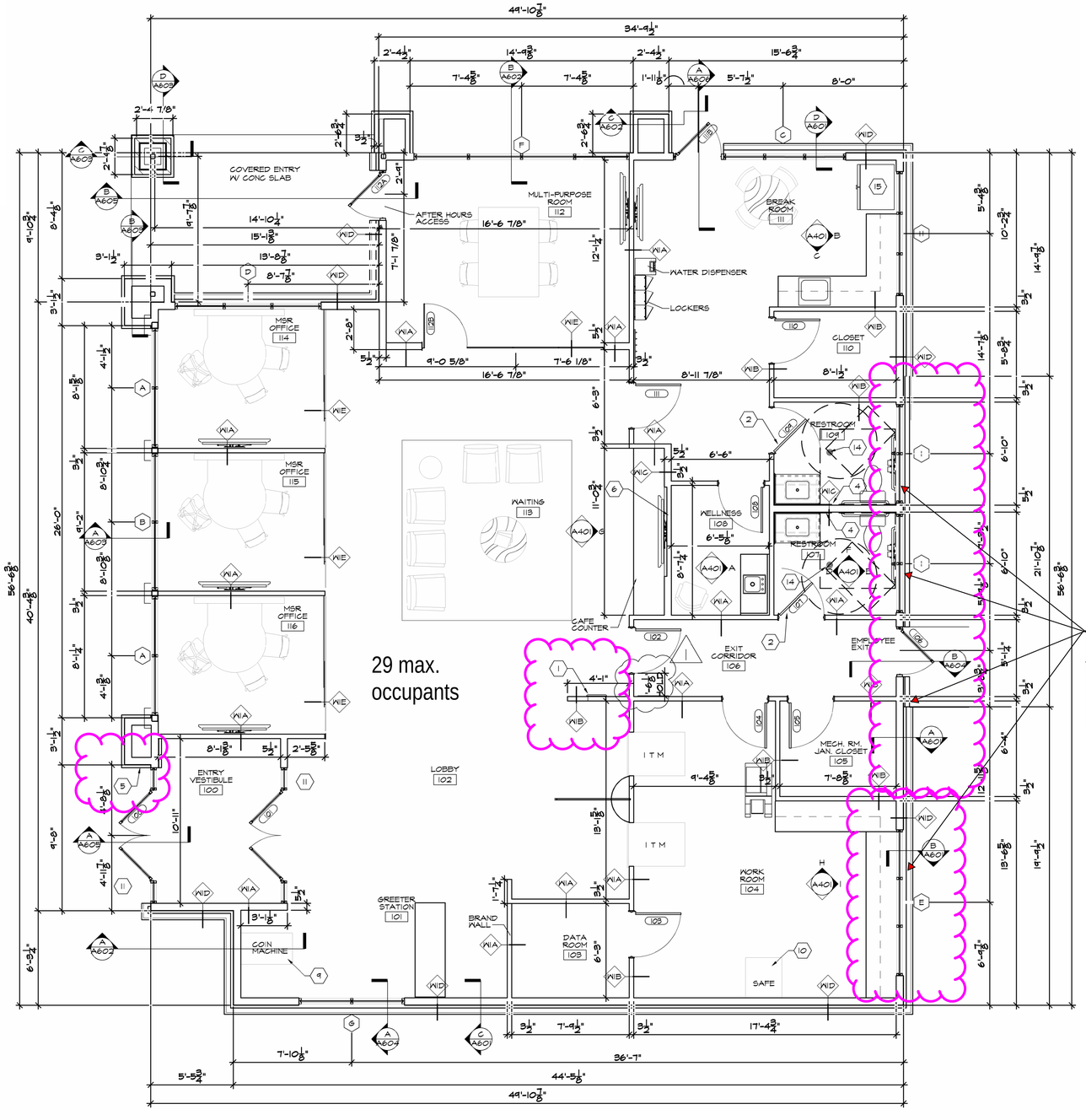

floor plan 1/4"=1'-0" 0 1 2 3 4 8 FEET

River Valley Credit Union
25 West Central Ave.
Springboro, Ohio 45066

© 2023 BY:
BERARDI + PARTNERS, LLC.
ARCHITECTS AND ENGINEERS.
ALL RIGHTS RESERVED.

THE ARRANGEMENTS DEPICTED HEREIN ARE THE SOLE PROPERTY OF BERARDI + PARTNERS, LLC., ARCHITECTS AND ENGINEERS, AND MAY NOT BE REPRODUCED WITHOUT ITS WRITTEN PERMISSION.

NOTE:

1. ALL BIDDERS SHALL VISIT THE SITE AND BECOME FAMILIAR W/ THE EXISTING CONDITIONS AND REQUIREMENTS OF THE PROJECT AND SHALL NOTIFY THE ARCHITECT OF ANY ERRORS AND OMISSIONS SUBSEQUENTLY DISCOVERED IN THE CONTRACT DOCUMENTS.
2. THE CONTRACT DOCUMENTS ARE COMPRISED OF THE DRAWINGS AND THE PROJECT MANUAL IN THEIR ENTIRETY. THE INFORMATION IN THESE DOCUMENTS IS DEPENDENT UPON AND COMPLEMENTARY OF EACH OTHER. SEPARATION OF THE CONTRACT DOCUMENTS SHALL NOT BE PERMITTED. IF THE CONTRACTOR CHOOSES TO SEPARATE THE DOCUMENTS, THEY DO SO AT THEIR OWN RISK AND EXPENSE.
3. ADDITIONALLY, SEE GENERAL INFORMATION ON "A0" SHEETS.
4. THE CLIENT ACKNOWLEDGES THE CONSULTANT'S (ARCHITECT) DRAWINGS AND SPECIFICATION, INCLUDING ALL DOCUMENTS ON ELECTRONIC MEDIA AS INSTRUMENTS OF THE CONSULTANTS (ARCHITECT) PROFESSIONAL SERVICE. THE CLIENT SHALL NOT REUSE OR MAKE, OR PERMIT TO BE MADE ANY MODIFICATION TO THE DRAWINGS AND SPECIFICATIONS WITHOUT THE PRIOR WRITTEN AUTHORIZATION OF THE CONSULTANT (ARCHITECT). THE CLIENT AGREES TO WAIVE ANY CLAIM AGAINST THE CONSULTANT (ARCHITECT) ARISING FROM ANY UNAUTHORIZED TRANSFER, REUSE OR MODIFICATION OF THE DRAWINGS AND SPECIFICATIONS.
5. ARCHITECT CANNOT WARRANT THE ACCURACY OF DATA CONTAINED HEREIN. ANY USE OR REUSE OF ORIGINAL OR ALTERED CADD DESIGN MATERIALS BY THE USER OR OTHER PARTIES WITHOUT THE REVIEW AND WRITTEN APPROVAL OF THE ARCHITECT SHALL BE AT THE SOLE RISK OF THE USER. FURTHERMORE, USER AGREES TO DEFEND, INDEMNIFY, AND HOLD ARCHITECT HARMLESS FROM ALL CLAIMS, INJURIES, DAMAGES, LOSSES, EXPENSES, AND ATTORNEY'S FEES ARISING OUT OF THE MODIFICATION OR REUSE OF THESE MATERIALS.

REVIEW SET

DATE:	04/04/23
PROJECT #:	22224
COPYRIGHT:	2023
ISSUE DATE:	06/13/23
REVISIONS:	

#	Description	Date
1	Correction Letter Response and issued revisions	6/13/23

FLOOR PLAN

A101

PHASE	PREL	DD	CD	REV
DRAWN BY	XX	XX	XX	XX
EDITED BY	XX	XX	XX	XX

BERARDI+
ARCHITECTURE | INTERIOR DESIGN | ENGINEERING
1398 GOODALE BOULEVARD, COLUMBUS, OHIO 43212
P 614.221.1110 berardipartners.com

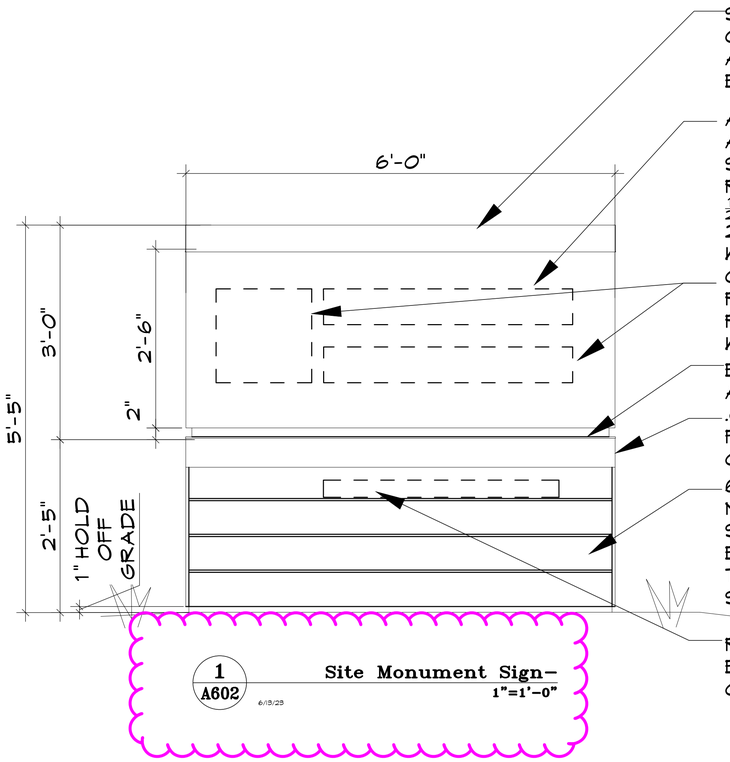

SLOPED .040 ALUM. CLAD COLOR COATED FLASHING CAP W/ 5" LEG AND DRIP TYP. OVER 2x P.T. SOLID BLOCKING TYP.

ALUM. BOX SIGN WITH LED BACKLIGHT AND RAISED STANDOFF LETTERING BY SIGNAGE MFR AS BRANDED PER OWNER REQUIREMENTS TYP. MTD. OVER PAINTED ½" MDO FINISHED SHEATHING OVER P.T. 2X4 SIGNAGE WALL FRAMING @ 16" O.C. WITH KING STUDS EACH END TYP.

COORD. UNDERGROUND CONDUIT AND POWER FEEDS TO MONUMENT SIGNAGE PANEL LOCATIONS TYP. COORDINATE W/SIGNAGE MFR AND VENDOR TYP.

BACKER ROD AND SEALANTS ALL SIDES TYP.

.040 ALUM. CLAD COLOR COATED FLASHING CAP W/ 5" LEG AND DRIP TYP. OVER 2x P.T. SOLID BLOCKING TYP.

6" CHANNEL PLANK 'LONGBOARDS' MFR SYSTEM IN BAMBOO, T&G SYSTEM AND STARTER/TERM BAR/RAILS AND ACCESSORIES/ TRIM AS REQUIRED. MATCH SIDING SYSTEM FROM BLDG TYP.

RAISED STANDOFF ADDRESS LETTERING BY SIGNAGE MFR AS BRANDED PER OWNER REQUIREMENTS TYP.

1 / A602 — Site Monument Sign — 1"=1'-0"

6/18/25

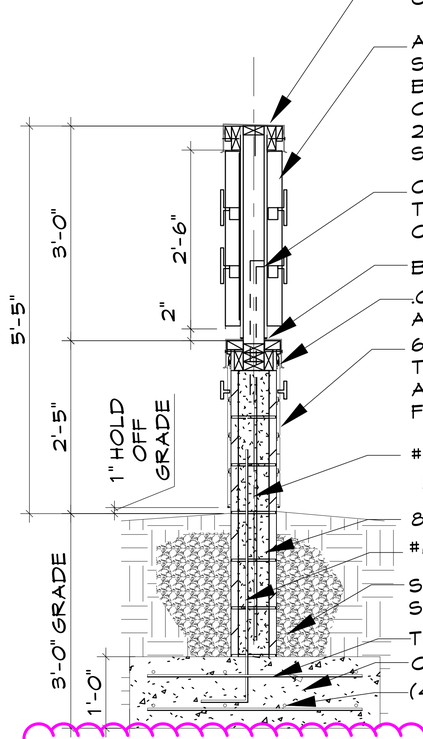

SLOPED .040 ALUM. CLAD COLOR COATEDFLASHING CAP W/ 5" LEG AND DRIP TYP. OVER 2x P.T. SOLID BLOCKING TYP.

ALUM. BOX SIGN WITH LED BACKLIGHT AND RAISED STANDOFF LETTERING BY SIGNAGE MFR AS BRANDED PER OWNER REQUIREMENTS TYP. MTD. OVER PAINTED ½" MDO FINISHED SHEATHING OVER P.T. 2X4 SIGNAGE WALL FRAMING @ 16" O.C. WITH KING STUDS EACH END TYP.

COORD. UNDERGROUND CONDUIT AND POWER FEEDS TO MONUMENT SIGNAGE PANEL LOCATIONS TYP. COORDINATE W/SIGNAGE MFR AND VENDOR TYP.

BACKER ROD AND SEALANTS ALL SIDES TYP.

.040 ALUM. CLAD COLOR COATEDFLASHING CAP W/ 5" LEG AND DRIP TYP. OVER 2x P.T. SOLID BLOCKING TYP.

6" CHANNEL PLANK 'LONGBOARDS' MFR SYSTEM IN BAMBOO, T&G SYSTEM AND STARTER/TERM BAR/RAILS AND ACCESSORIES/TRIM AS REQUIRED. MATCH SIDING SYSTEM FROM BLDG TYP.

#6 REBAR @ GROUTED SOLID CELLS AT REBAR TYP. LAP LENGTH 30" MIN. TYP.

8" NOM. CMU FOUNDATION/SIGNAGE WALL SYSTEM TYP.

#6 REBAR @ 16" O.C. WITH 42" MIN VERT LEG TYP.

STORM DRAINAGE TILE EACH SIDE OF WALL TO STORM STRUCTURE TYP.

TRANSVERSE #6 REBAR @ 16" T&B TYP.

CONCRETE REINFORCED FOOTING TYP.

(4) LONGITUDINAL #6 REBAR @ EQ. SPACING T&B TYP.

2 / A602 — Detail: Monument Sign Section — 1"=1'-0"

6/25/25

PHASE	PRELIM	CD	REV.
DRAWN BY	XX	XX	XX
EDITED BY	XX	XX	XX

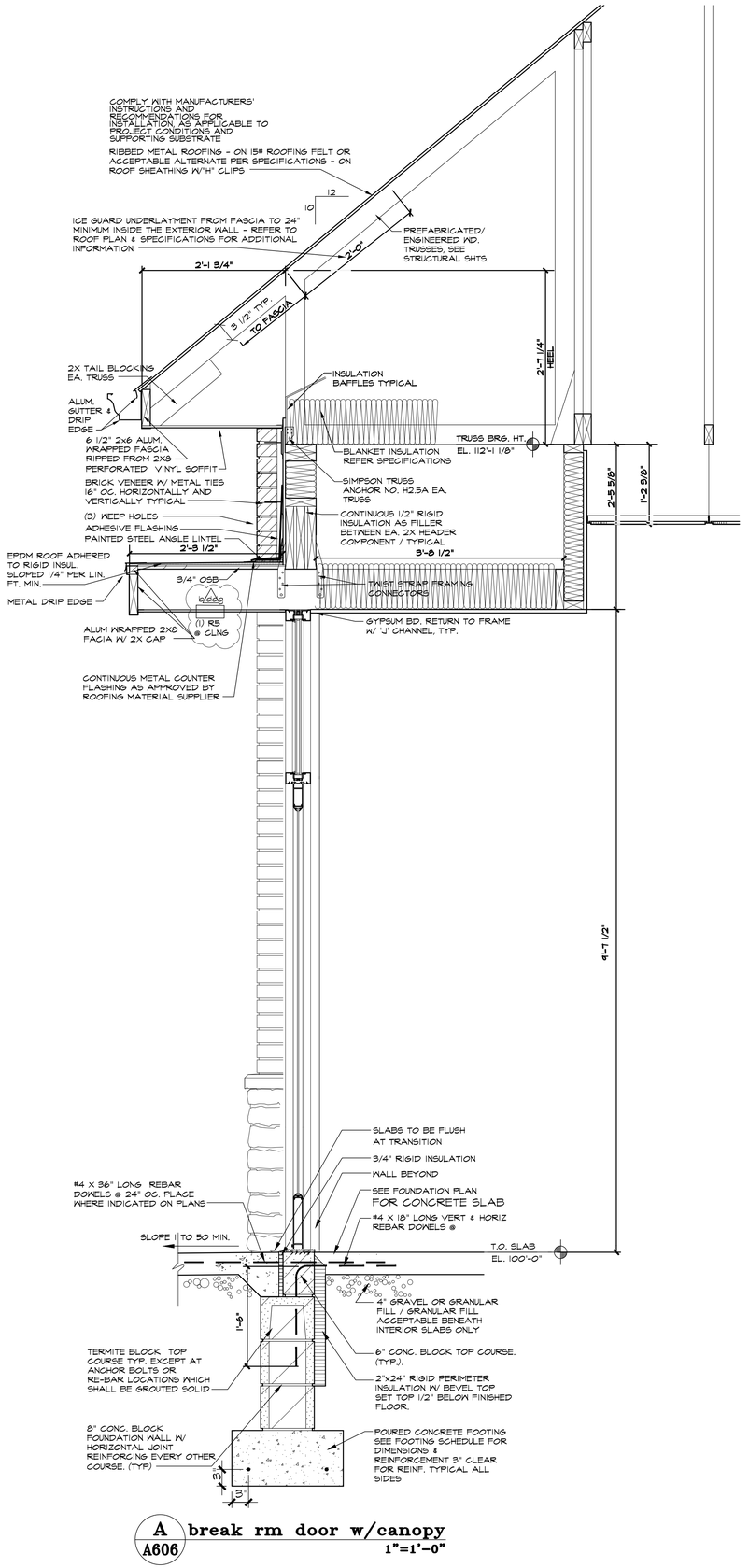

A / A606 — break rm door w/canopy — 1"=1'-0"

STATE OF OHIO GEORGE D. BERARDI REGISTERED ARCHITECT

GEORGE D. BERARDI, LICENSE #6480 EXPIRATION DATE 12/31/2023

River Valley Credit Union
25 West Central Ave.
Springboro, Ohio 45066

© 2023 BY: BERARDI + PARTNERS, LLC, ARCHITECTS AND ENGINEERS. ALL RIGHTS RESERVED.

THE ARRANGEMENTS DEPICTED HEREIN ARE THE SOLE PROPERTY OF BERARDI + PARTNERS, LLC., ARCHITECTS AND ENGINEERS, AND MAY NOT BE REPRODUCED WITHOUT ITS WRITTEN PERMISSION

NOTE:

1. ALL BIDDERS SHALL VISIT THE SITE AND BECOME FAMILIAR W/ THE EXISTING CONDITIONS AND REQUIREMENTS OF THE PROJECT AND SHALL NOTIFY THE ARCHITECT OF ANY ERRORS AND OMISSIONS SUBSEQUENTLY DISCOVERED IN THE CONTRACT DOCUMENTS.
2. THE CONTRACT DOCUMENTS ARE COMPRISED OF THE DRAWINGS AND THE PROJECT MANUAL IN THEIR ENTIRETY. THE INFORMATION IN THESE DOCUMENTS IS DEPENDENT UPON AND COMPLEMENTARY OF EACH OTHER. SEPARATION OF THE CONTRACT DOCUMENTS SHALL NOT BE PERMITTED. IF THE CONTRACTOR CHOOSES TO SEPARATE THE DOCUMENTS, THEY DO SO AT THEIR OWN RISK AND EXPENSE.
3. ADDITIONALLY, SEE GENERAL INFORMATION ON "AO" SHEETS.
4. THE CLIENT ACKNOWLEDGES THE CONSULTANT'S (ARCHITECT) DRAWINGS AND SPECIFICATION, INCLUDING ALL DOCUMENTS ON ELECTRONIC MEDIA AS INSTRUMENTS OF THE CONSULTANTS (ARCHITECT) PROFESSIONAL SERVICE. THE CLIENT SHALL NOT REUSE OR MAKE, OR PERMIT TO BE MADE ANY MODIFICATION TO THE DRAWINGS AND SPECIFICATIONS WITHOUT THE PRIOR, WRITTEN AUTHORIZATION OF THE CONSULTANT (ARCHITECT). THE CLIENT AGREES TO WAIVE ANY CLAIM AGAINST THE CONSULTANT (ARCHITECT) ARISING FROM ANY UNAUTHORIZED TRANSFER, REUSE OR MODIFICATION OF THE DRAWINGS AND SPECIFICATIONS.
5. ARCHITECT CANNOT WARRANT THE ACCURACY OF DATA CONTAINED HEREIN. ANY USE OR REUSE OF ORIGINAL OR ALTERED CADD DESIGN MATERIALS BY THE USER OR OTHER PARTIES WITHOUT THE REVIEW AND WRITTEN APPROVAL OF THE ARCHITECT SHALL BE AT THE SOLE RISK OF THE USER. FURTHERMORE USER AGREES TO DEFEND, INDEMNITY, AND HOLD ARCHITECT HARMLESS FROM ALL CLAIMS, INJURIES, DAMAGES, LOSSES, EXPENSES, AND ATTORNEY'S FEES ARISING OUT OF THE MODIFICATION OR REUSE OF THESE MATERIALS.

CORRECTION LETTER RESPONSE

DATE:	04/04/23
PROJECT #:	22224
COPYRIGHT:	2023
ISSUE DATE:	06/23/23
REVISIONS:	

#	Description	Date
1	Correction Letter Response and issued revisions	6/13/23
2	Zoning Response	6/23/23

SECTIONS & DETAILS

A606

BERARDI+
ARCHITECTURE | INTERIOR DESIGN | ENGINEERING
1398 GOODALE BOULEVARD, COLUMBUS, OHIO 43212
P 614.221.1110 berardipartners.com

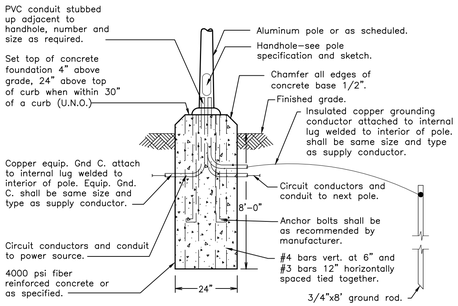

* Provide foundation with 24" diameter, 8' concrete depth, and steel as shown, or provide foundation designed by a structural engineer based on installed fixture, pole wind load and actual soil conditions.

Light Pole Base Detail

NTS

Photocell Control Wiring Detail

NTS

Permanent Sign Detail

NTS

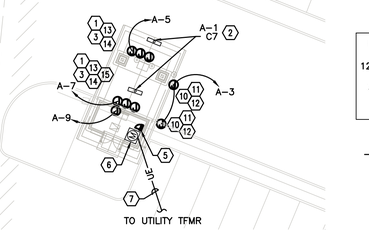

ATM Drivethrough

1"=20'-0"

Ratings: PANEL: A AMPS: 400 VOLTS: 208 PHASE: 3 WIRE: 4

GENERAL INFORMATION: LOCATION: ATM KIOSK BUILDING (PHASE 1) MOUNTING: SURFACE FED FROM: TRANSFORMER SHORT CIRCUIT: 65k AMPS

MAIN OPTIONS: MAIN BREAKER: 300 W/ SHUNT TRIP: N MAIN LUGS ONLY: N SUB-FEED LUGS: N FEED THRU LUGS: N

BUSS OPTIONS: NEUTRAL BUS: Y SERVICE RATED: N GRD. BUS: Y ISO. GRD. BUS: N

BRANCH OPTIONS* G = W GFCI PROTECTION A = W ARC FAULT R = W/ RELAY CONTROL L = W/ LOCK ON DEVICE

VA	LOAD	WIRE	GRD	CBP	*	CKT	Ø	CKT	*	CBP	GRD	WIRE	LOAD	VA
140	ATM DRIVE THRU LIGHTING	12	12	20/1		1	A	2					SPACE	0
1200	ATM LANE SIGN/GE	12	12	20/1		3	B	4					SPACE	0
700	ATM MACHINE	12	12	20/1		5	C	6					SPACE	0
700	ATM MACHINE	12	12	20/1		7	A	8					SPACE	0
700	FUTURE ATM MACHINE	12	12	20/1		9	B	10					SPACE	0
0	SPACE					11	C	12					SPACE	0
0	SPACE					13	A	14					SPACE	0
0	SPACE					15	B	16					SPACE	0
0	SPACE					17	C	18					SPACE	0
0	SPACE					19	A	20					SPACE	0
0	SPACE					21	B	22					SPACE	0
0	SPACE					23	C	24					SPACE	0
0	SPACE					25	A	26					SPACE	0
0	SPACE					27	B	28					SPACE	0
0	SPACE					29	C	30					SPACE	0
0	SPACE					31	A	32					SPACE	0
0	SPACE					33	B	34					SPACE	0
0	SPACE					35	C	36					SPACE	0
0	SPACE					37	A	38					SPACE	0
0	SPACE					39	B	40					SPACE	0
0	SPACE					41	C	42					SPACE	0

	CONNECTED (VA)	DEMAND FACTOR	DEMAND (VA)
LIGHTING	8,990	125%	11,238
RECEPTACLES	18,600	100% FOR < 10KVA 50% REM.X/KNKS.V.A	14,300
ELECTRIC SPACE HEAT	0	0%	0
COOLING	0	100%	0
MOTORS	540	100% + 25% LARGEST	675
MISCELLANEOUS	7,099	100%	7,099
PANEL TOTAL (VA)	35,229		33,393
CURRENT @ 208V 3Ø (AMPS)	97.8		92.4

PHASE A CONNECTED LOAD (KVA)= 0.89
PHASE B CONNECTED LOAD (KVA)= 1.95
PHASE C CONNECTED LOAD (KVA)= 0.75
TOTAL CONNECTED LOAD (KVA)= 3.59

TOTAL CONNECTED LOAD (AMPS)= 9.96

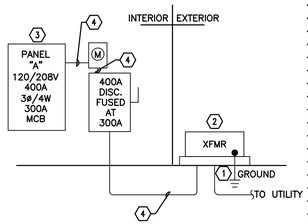

Riser Diagram

NTS

Riser Coded Notes

1. #3/0 Copper ground conductor to building grounding system consisting of building steel, metallic water pipe (at building entry), foundation rebar, and grounding electrode. See grounding system detail, this sheet.
2. Pad Mounted Utility Transformer: Provide primary feeder (excavation, conduit, concrete encasement, backfill), secondary feeder (excavation, conduit, concrete encasement, backfill, conductors), and pad for inspection, transformer, and final connection by utility company. Verify utility requirements and existing conditions in field before bid and coordinate with utility and other trades during construction. All equipment connected downstream shall have 65,000 Amp SCCR. Provide copper ground rod (5/8" diam., 10' long) exothermically welded to 3/0 AWG grounding electrode conductor.
3. Provide Arc Flash warning labels for all panels to comply with NEC 110.21.
4. Furnish and install (4) #350, & (1) #3 Grd. in 3" conduit for Phase 1 electrical panel located in ATM Kiosk. (field verify exact requirements prior to bid).

Statistics

Description	Symbol	Avg	Max	Min	Max/Min	Avg/Min
Drive Through	+	7.8 fc	19.1 fc	2.2 fc	8.7:1	3.5:1
Parking Lot	+	2.0 fc	5.0 fc	0.9 fc	5.6:1	2.2:1
Property Line	+	0.1 fc	0.3 fc	0.0 fc	N/A	N/A

Schedule

Label	QTY	Manufacturer	Catalog Number	Number Lamps	Lumens per Lamp	LLF	Notes
C7	2	LITECONTROL	3L-R-D-4-DRP-X-CX-35K-D120	1	4797	1	
P8-III-HS	1	U.S. ARCHITECTURAL LIGHTING	DSCPB22-VLED-III-48LED-700mA-WW-HS	48	158	1	
P8-IV-HS	3	U.S. ARCHITECTURAL LIGHTING	DSCPB22-VLED-IV-48LED-700mA-WW-HS	48	163	1	
P8-IV	2	U.S. ARCHITECTURAL LIGHTING	DSCPB22-VLED-IV-48LED-700mA-WW	48	213	1	
P8-V	2	U.S. ARCHITECTURAL LIGHTING	DSCPB22-VLED-VSQ-48LED-700mA-WW	48	224	1	

Electrical General Notes

A. Minimum conduit burial depth for branch circuit and low voltage conduit shall be 24" B.F.G.

B. Circuit P8 fixtures to circuit B–16. Extend through exterior lighting contactor.

C. Circuit monument sign to circuit B–34. Extend through exterior lighting contactor. Extend conductors to junction box located within the building and cap for future connection.

D. Minimum underground conduit size is 1".

E. Extend power conduits to an accessible location to mechanical room. Extend security and data conduits to telecom room.

Electrical Coded Notes

1. Two junction box connections for key pad and security contact.
2. Light fixtures mounted in island canopy. Coordinate exact mounting requirements a site with canopy installer.
3. Underground conduit for data, security, lighting and power connections to ATM island. Provide 1" conduits for security, 1" conduits for data and 1" conduit for power to each island. Coordinate stub up location with ATM pedestals. Provide 1" conduit for ATM land sign for canopy. Stub up through Column.
4. Extend through exterior lighting contactor, connected to BAS panel.
5. (Phase 1) Provide Main service panel 'A' in ATM Kiosk building.
   (Phase 2) Relocate Main service panel 'A' to building electrical room upon completion of phase 1.
6. (Phase 1) Provide Utility meter and service disconnect at ATM Kiosk building.
   (Phase 2) Relocate Utility meter and service disconnect to building upon completion of phase 1.
7. (Phase 1) Provide Main service lateral to ATM Kiosk.
   (Phase 2) Main service lateral to be relocated to building upon completion of phase 1. Refer to one–line for details.
8. Monument sign. Provide (1) 1" conduit for power and (1) 1" conduit for data. Coordinate sign lighting requirements with the sign manufacturer.
9. (2) 2" conduits for telecom service to location determined by telecom utility company. Coordinate termination with telecom utility company. Coordinate termination with telecom utility company. Assume separate trench for pricing. Assume 200' of conduit, trench and backfill.
10. Junction box for ATM lane sign mounted to edge of canopy. Extend to switch in work room. Refer to manufacturer's wiring diagram for additional requirements.
11. Junction box for power connection to ATM.
12. Junction box/conduit for data connection.
13. Junction box/conduit for alarm.
14. Junction box/conduit for network.
15. Total Conduit summary for ATM canopy:

a. (5) Conduits Extend up to Canopy Structure, (3) conduits routed to Work Room 104 for Lane Signs, (2) conduits routed to building Mechanical room 105 for main lighting and data.

b. (9) Conduits to PTM/ATM concrete islands at grade, route to Mechanical room 105.



site utiltiy plan

1"=20'-0"

north



STATE OF OHIO
JOHN J. CYBULSKI
E-78419
REGISTERED PROFESSIONAL ENGINEER
06/22/2023

River Valley Credit Union

25 West Central Ave.
Springboro, Ohio 45066

© 2023 BY:
BERARDI + PARTNERS, LLC.
ARCHITECTS AND ENGINEERS.
ALL RIGHTS RESERVED.

THE ARRANGEMENTS DEPICTED HEREIN ARE THE SOLE PROPERTY OF BERARDI + PARTNERS, LLC., ARCHITECTS AND ENGINEERS, AND MAY NOT BE REPRODUCED WITHOUT ITS WRITTEN PERMISSION

NOTE:

1. ALL BIDDERS SHALL VISIT THE SITE AND BECOME FAMILIAR W/ THE EXISTING CONDITIONS AND REQUIREMENTS OF THE PROJECT AND SHALL NOTIFY THE ARCHITECT OF ANY ERRORS AND OMISSIONS SUBSEQUENTLY DISCOVERED IN THE CONTRACT DOCUMENTS.

2. THE CONTRACT DOCUMENTS ARE COMPRISED OF THE DRAWINGS AND THE PROJECT MANUAL IN THEIR ENTIRETY. THE INFORMATION IN THESE DOCUMENTS IS DEPENDENT UPON AND COMPLEMENTARY OF EACH OTHER. SEPARATION OF THE CONTRACT DOCUMENTS SHALL NOT BE PERMITTED. IF THE CONTRACTOR CHOOSES TO SEPARATE THE DOCUMENTS, THEY DO SO AT THEIR OWN RISK AND EXPENSE.

3. ADDITIONALLY, SEE GENERAL INFORMATION ON "A0" SHEETS.

4. THE CLIENT ACKNOWLEDGES THE CONSULTANT'S (ARCHITECT) DRAWINGS AND SPECIFICATION, INCLUDING ALL DOCUMENTS ON ELECTRONIC MEDIA AS INSTRUMENTS OF THE CONSULTANTS (ARCHITECT) PROFESSIONAL SERVICE. THE CLIENT SHALL NOT REUSE OR MAKE OR PERMIT TO BE MADE ANY MODIFICATION TO THE DRAWINGS AND SPECIFICATIONS WITHOUT THE PRIOR WRITTEN AUTHORIZATION OF THE CONSULTANT (ARCHITECT). THE CLIENT AGREES TO WAIVE ANY CLAIM AGAINST THE CONSULTANT (ARCHITECT) ARISING FROM ANY UNAUTHORIZED TRANSFER, REUSE OR MODIFICATION OF THE DRAWINGS AND SPECIFICATIONS.

5. ARCHITECT CANNOT WARRANT THE ACCURACY OF DATA CONTAINED HEREIN. ANY USE OR REUSE OF ORIGINAL OR ALTERED CADD DESIGN MATERIALS BY THE USER OR OTHER PARTIES WITHOUT THE REVIEW AND WRITTEN APPROVAL OF THE ARCHITECT SHALL BE AT THE SOLE RISK OF THE USER. FURTHERMORE, USER AGREES TO DEFEND, INDEMNIFY, AND HOLD ARCHITECT HARMLESS FROM ALL CLAIMS, INJURIES, DAMAGES, LOSSES, EXPENSES, AND ATTORNEY'S FEES ARISING OUT OF THE MODIFICATION OR REUSE OF THESE MATERIALS.

CORRECTION LETTER RESPONSE

DATE:	04/04/23
PROJECT #:	22224
COPYRIGHT:	2023
ISSUE DATE:	06/22/23
REVISIONS:	

Correction Letter Response and issued revisions 1 06/22/23

ELECTRICAL SITE UTILITY PLAN

ES.101

BERARDI+
ARCHITECTURE | INTERIOR DESIGN | ENGINEERING
1398 GOODALE BOULEVARD, COLUMBUS, OHIO 43212
P 614.221.1110 berardipartners.com

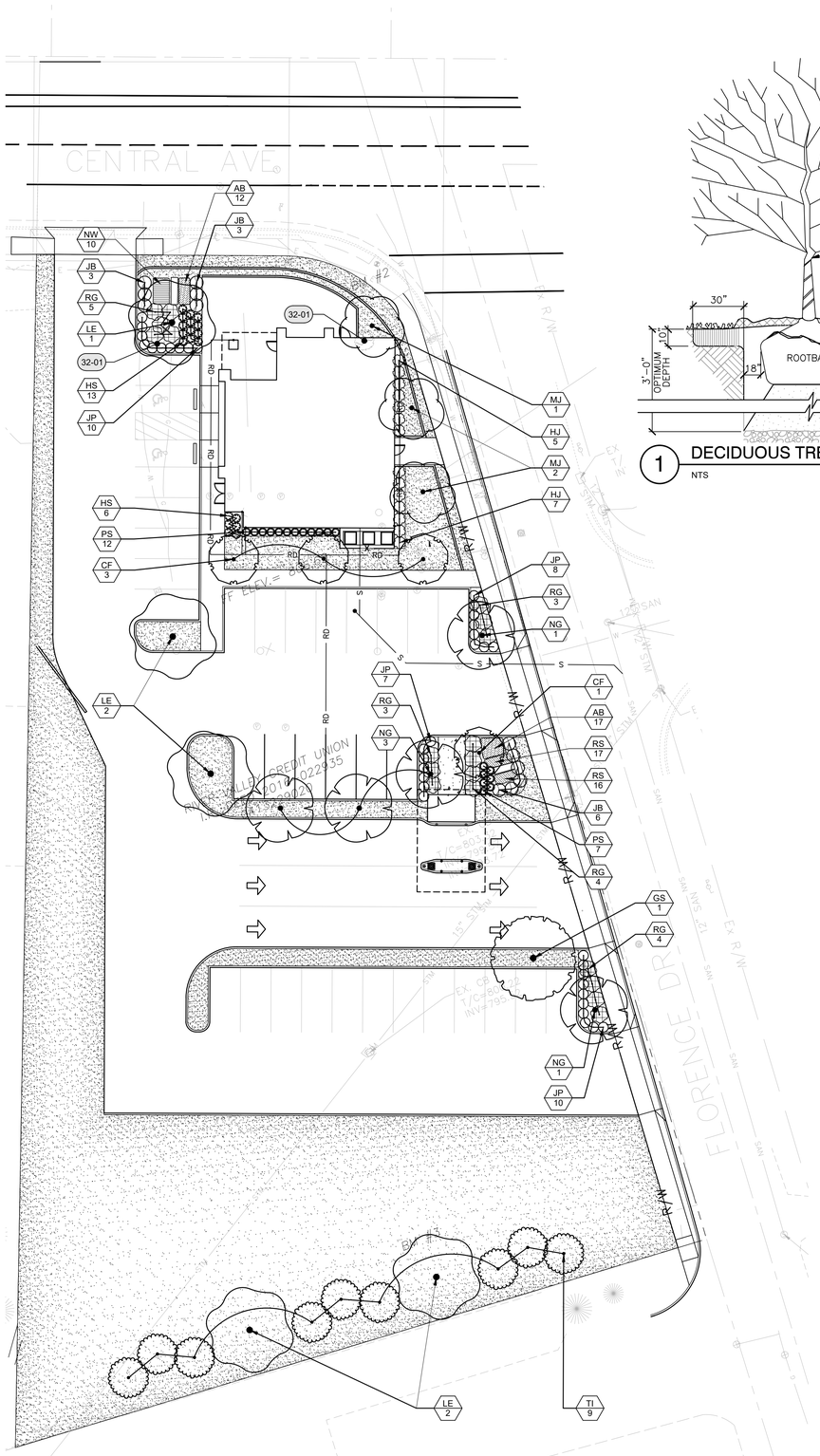



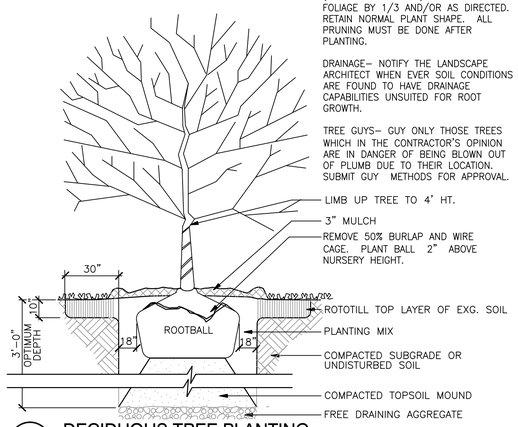

1 DECIDUOUS TREE PLANTING

NTS P-CO-SAN-TOSO1-02

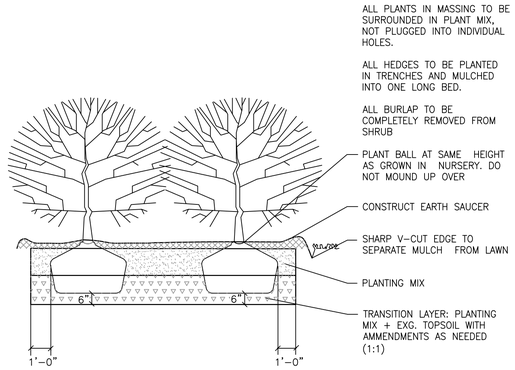

2 SHRUB PLANTING GROUP

NTS P-CO-AND-WADS-04

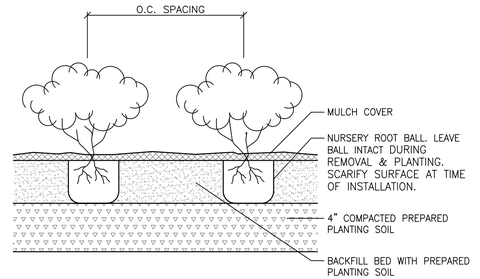

3 PERENNIAL AND GROUNDCOVER INSTALLATION

NTS P-CO-WES-08

GENERAL NOTES:

1. SURVEY INFORMATION OBTAINED ELECTRONICALLY. PLAN IT CANNOT ATTEST TO THE ACCURACY OR RELIABILITY OF LEGAL BOUNDARIES, UTILITIES, EASEMENTS OR FIELD GATHERED DATA.

2. USE DIMENSIONAL INFORMATION GIVEN. DO NOT SCALE DRAWINGS.

3. THE CONTRACTOR SHALL INCLUDE FOR PAYMENT THE COSTS OF REMOVAL AND DISPOSAL OF ALL TREES, BRUSH AND STUMPS WITHIN THE SCOPE OF PROPOSED WORK.

4. LOCATION, SUPPORT PROTECTION AND RESTORATION OF ALL EXISTING UTILITIES AND APPURTENANCES SHALL BE THE RESPONSIBILITY OF THE CONTRACTOR. THE COST OF THIS WORK SHALL BE INCLUDED IN THE UNIT PRICE BID FOR THE VARIOUS ITEMS.

5. THE LOCATION OF THE EXISTING UNDERGROUND UTILITIES ARE SHOWN IN AN APPROXIMATE WAY ONLY AND HAVE NOT BEEN INDEPENDENTLY VERIFIED BY THE OWNER OR ITS REPRESENTATIVE. THE CONTRACTOR SHALL DETERMINE THE EXACT LOCATION OF ALL EXISTING UTILITIES PRIOR TO COMMENCING WORK AND AGREES TO BE FULLY RESPONSIBLE FOR ANY AND ALL DAMAGES WHICH MIGHT BE OCCASIONED BY THE CONTRACTOR'S FAILURE TO EXACTLY LOCATE AND PRESERVE ANY AND ALL UNDERGROUND UTILITIES.

6. CONTRACTOR SHALL CALL UTILITIES PROTECTION SERVICE A MINIMUM OF 48 HOURS PRIOR TO CONSTRUCTION.

7. CONTRACTOR SHALL NOT REMOVE ANY TREES, SHRUBS, OR OTHER LANDSCAPE FEATURES NOT IDENTIFIED FOR REMOVAL WITHOUT THE EXPRESS WRITTEN CONSENT OF THE OWNER.

8. CONTRACTOR SHALL MAINTAIN POSITIVE DRAINAGE IN LAWN AREAS AT ALL TIMES.

9. ALL DIMENSIONS AND WALL RADII ARE TAKEN TO FACE OF CURB OR WALL, UNLESS OTHERWISE NOTED.

10. CONTRACTOR SHALL VERIFY DIMENSIONS AND NOTIFY OWNERS REP OF ANY DISCREPANCIES.

11. ALL CONCRETE WORK TO RECEIVE CONTROL JOINTS AT 5' O.C., AND EXPANSION JOINTS AT 30' O.C. MAXIMUM, WITH LIGHT BROOM FINISH UNLESS OTHERWISE NOTED ON PLANS.

ZONING NOTES:

1. PER SPRINGBORO, OH ZONING CODE :

1280.04 REQUIRED LANDSCAPING AND SCREENING

Per Table 14. Landscaping Adjacent to Roads: Shade trees are required at a rate of 1 per 40 linear feet of road frontage. Ornamental trees are required at a rate of 1 per 100 linear feet of road frontage. Shrubs are required at a rate of 1 per 5 linear feet of road frontage. When calculating road frontage, openings for driveways and sidewalks shall not be counted.

Total Road Frontage of Site = 272 feet
Total Required Shade Trees = 7
Total Required Ornamental Trees = 3
Total Required Shrubs = 55

Per Table 15. Required Landscaping & Buffer: Proposed Community, Civic, Institutional, Commercial, Office and Service, and Other Uses require a buffer of 30 feet with 1 tree planted per 20 feet (at least 50% evergreen) if adjacent to an R-3 District.

Total Buffer Frontage of Site = 203 feet
Total Required Trees = 11

Per Section (e) Parking Lot Landscaping: Parking located along Central Ave (SR 73) is required to have evergreen landscaping. Interior parking lot landscaping is required at a rate of at least 10 square feet per parking space. A minimum of 1 tree shall be planted per 300 square feet of interior parking lot landscaping.

Total Parking Spaces on Site = 34
Total Interior Parking Lot Landscape Required = 340 square feet
Total Interior Trees Required = 2

280.04 SPECIFIC REMOVAL CONTROLS & REPLACEMENT REQS.

Per Section (a) : Each protected tree removed must be replaced on-site with a tree with at least 2.5" DBH.

Total Trees Removed on Site = 2
Total Trees Replaced on Site = 2

GENERAL PLANTING NOTES:

1. SURVEY INFORMATION OBTAINED ELECTRONICALLY. PLAN-IT STUDIOS CANNOT ATTEST TO THE ACCURACY OR RELIABILITY OF LEGAL BOUNDARIES, EASEMENTS OR FIELD GATHERED DATA.

2. THE LOCATION OF THE EXISTING UNDERGROUND UTILITIES ARE SHOWN IN AN APPROXIMATE WAY ONLY AND HAVE NOT BEEN INDEPENDENTLY VERIFIED BY THE OWNER OR ITS REPRESENTATIVE. THE CONTRACTOR SHALL DETERMINE THE EXACT LOCATION OF ALL EXISTING UTILITIES PRIOR TO COMMENCING WORK AND AGREES TO BE FULLY RESPONSIBLE FOR ANY AND ALL DAMAGES WHICH MIGHT BE OCCASIONED BY THE CONTRACTOR'S FAILURE TO EXACTLY LOCATE AND PRESERVE ANY AND ALL UNDERGROUND UTILITIES.

3. ALL DIMENSIONS ARE TAKEN TO FACE OF CURB OR BUILDING WHERE APPLICABLE UNLESS OTHERWISE NOTED. USE DIMENSIONAL INFORMATION GIVEN. DO NOT SCALE DRAWINGS.

4. CONTRACTOR SHALL REFER QUESTIONS ON MATERIALS, FINISHES, LABOR, AND/OR PERFORMANCE STANDARDS NOT SPECIFIED HEREIN TO THE LANDSCAPE ARCHITECT.

5. ALL CHANGES TO DESIGN OR PLANT SUBSTITUTIONS ARE TO BE AUTHORIZED BY THE LANDSCAPE ARCHITECT.

6. CONSULT PLANT SCHEDULE FOR PLANT SIZES AND SPECIFICATIONS. CONTRACTOR IS RESPONSIBLE FOR ALL PLANTS DRAWN ON PLANS. PLANT LIST QUANTITIES ARE FOR CONVENIENCE ONLY.

7. ALL PLANTS TO CONFORM TO THE AMERICAN STANDARD FOR NURSERY STOCK (ANSI-Z60.1-2014) IN REGARDS TO SIZING, GROWING AND B&B SPECIFICATIONS.

8. ALL PROPOSED PLANTING BEDS TO BE TILLED TO A MINIMUM DEPTH OF 6", ADDITIONAL AMENDMENTS TO BE ADDED PER SOILS REPORT.

9. ALL PLANTING BEDS TO BE FERTILIZED WITH 10-10-10 OR APPROVED EQUAL.

10. PLANTING HOLES TO BE DUG A MINIMUM OF TWICE THE WIDTH AND 6-8 INCHES DEEPER THAN THE SIZE OF THE ROOT BALL OF BOTH SHRUB AND TREE AND TO BE AMENDED WITH ORGANIC SOIL CONDITIONER.

11. IN AREAS WHERE BEDROCK OR HEAVILY COMPACTED ROCK FILL IS ENCOUNTERED, THE PLANTING HOLES ARE TO BE DUG TO A MINIMUM OF THREE TIMES THE WIDTH AND ONE FOOT DEEPER THAN THE SIZE OF THE ROOT BALL. NOTIFY LANDSCAPE ARCHITECT IF FIELD CONDITIONS WARRANT ADJUSTMENT OF PLANT LOCATIONS.

12. CONTRACTOR TO PROVIDE A FULL 1 YEAR GUARANTEE ON ALL PLANTS INSTALLED AND PROVIDE COMPLETE MAINTENANCE ON ALL WORK DONE BEGINNING ON THE DAY OF APPROVAL FROM OWNER'S REPRESENTATIVE AND CONTINUING FOR A THREE MONTH DURATION AT WHICH TIME OWNER'S REPRESENTATIVE WILL DECLARE JOB ACCEPTANCE

13. ALL EXISTING PLANT MATERIAL SHOWN ON THIS PLAN IS TO BE PRESERVED UNLESS SPECIFICALLY NOTED OTHERWISE.

14. ALL SHRUBS AND GROUND COVER BEDS (EXISTING AND NEW), PLANTING BEDS, AND SHRUB MASSES SHALL HAVE A MINIMUM 3" DEEP SHREDDED HARDWOOD BARK MULCH. MULCH HEDGES IN A CONTINUOUS BED.

15. EXISTING GRASS TO BE REMOVED, IF PRESENT, AND TOPSOIL TO BE SPREAD SMOOTH AND HAND-RAKED TO REMOVE ALL ROCKS AND DEBRIS LARGER THAT 1 INCH IN DIAMETER PRIOR TO LAYING SOD OR SEEDING.

16. ALL AREAS DISTURBED BY CONSTRUCTION ARE TO BE RESTORED, FINE GRADED AND SEEDED. (SEE LANDSCAPE PLANS) . SEEDING OR SODDING BY LANDSCAPE CONTRACTOR.

17. IF APPLICABLE LANDSCAPE CONTRACTOR TO COORDINATE WITH EXISTING OR PROPOSED IRRIGATION SYSTEM. IF PROPOSED IRRIGATION SYSTEM COORDINATE WITH IRRIGATION CONTRACTOR AND INSTALLATION OF SYSTEM.

PLANT SCHEDULE

TREES	QTY	COMMON / BOTANICAL NAME	CONT	CAL	SIZE
CF	4	Forest Pansy Eastern Redbud / Cercis canadensis 'Forest Pansy'	B & B	Multi-stem #5	
GS	1	Skyline Honey Locust / Gleditsia triacanthos inermis 'Skyline'	B & B	2.5"Cal	
LE	5	Emerald City® Tulip Poplar / Liriodendron tulipifera 'JFS-Oz'	B & B	2.5"Cal	
MJ	3	Moonglow® Sweetbay Magnolia / Magnolia virginiana 'Jim Wilson'	B & B	2.5"Cal	
NG	5	Green Gable™ Tupelo / Nyssa sylvatica 'NSUHH'	B & B	2.5"Cal	
TI	9	Green Giant Arborvitae / Thuja x 'Green Giant'	B & B		6`-7` HT.
SHRUBS	**QTY**	**COMMON / BOTANICAL NAME**	**CONT**	**CAL**	**SIZE**
HJ	14	Little Lime® Panicle Hydrangea / Hydrangea paniculata 'Jane'	3 gal		
HS	19	Sike`s Dwarf Oakleaf Hydrangea / Hydrangea quercifolia `Sike`s Dwarf'	No. 5 Cont. 24" min		
JB	12	Blue Chip Juniper / Juniperus horizontalis 'Blue Chip'	12" No.3		
JP	36	Kallay Compact Pfitzer Juniper / Juniperus chinensis 'Kallays Compact'	24" SP		
PS	19	Shenandoah Switch Grass / Panicum virgatum 'Shenandoah'	3 gal		
RG	19	Gro-Low Fragrant Sumac / Rhus aromatica 'Gro-Low'	No. 3 Cont.		
GROUND COVERS	**QTY**	**COMMON / BOTANICAL NAME**	**CONT**		
AB	29	Blue Ice Eastern Bluestar / Amsonia tabernaemontana 'Blue Ice'	1 Gal		18" o.c.
NW	10	Walker's Low Catmint / Nepeta x 'Walker's Low'	1 Gal		24" o.c.
RS	33	Little Goldstar Coneflower / Rudbeckia fulgida 'Little Goldstar'	1 Gal		14" o.c.

REFERENCE NOTES SCHEDULE

SYMBOL	32 EXTERIOR IMPROVEMENTS DESCRIPTION	QTY	DETAIL
32-01	EXISTING TREE TO BE REMOVED		

PLANIT
www.planitstudios.com

CREDIT UNION
25 W Central Ave.
Springboro, OH 45066

ISSUANCES

NO.	DESCRIPTION	DATE
A	PERMIT	06.23.23

PROJECT NO. 023-064
DRAWN BY M.M.B.
CHECKED BY K.A.A.

LANDSCAPE SITE PLAN

L - 1.0

DRAWINGS FOR THE CONSTRUCTION OF

RIVER VALLEY CREDIT UNION

25 WEST CENTRAL AVENUE, SPRNIGBORO

WARREN COUNTY, OH 45066



LOCATION MAP

NO SCALE

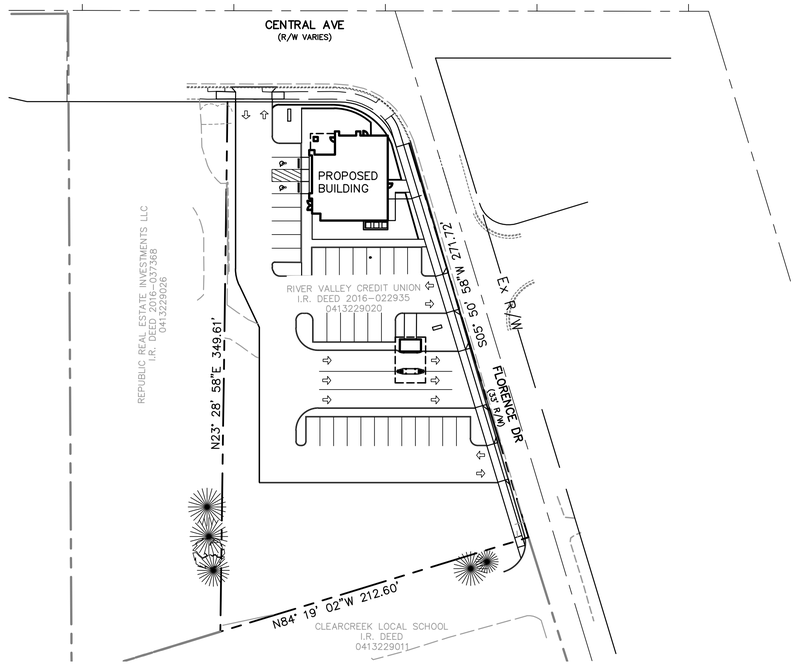

INDEX MAP

SCALE: 1" = 50'

SHEET SET INDEX:

COVERSHEET	CS
GENERAL NOTES	C001–C002
DEMOLITION PLAN	C101
SITE DIMENSION PLAN	C201–C202
SITE DETAILS	C200
GRADING PLAN	C300
GRADING DETAIL	C301
UTILITY PLAN	C400
UTILITY DETAILS	C401

NOTES:

1. NO STORMWATER DETENTION MEASURES ARE REQUIRED AS THE PROPOSED IMPROVEMENTS WILL DECREASE THE AMOUNT OF IMPERVIOUS AREA.

   IMPERVIOUS AREA: EXISTING = 0.793 AC.±
   PROPOSED = 0.648 AC.±
   NET REDUCTION IN IMPERVIOUS AREA = 0.145 AC.±

2. NO WATER QUALITY MEASURES AND SWPPP ARE REQUIRED AS THE DISTURBED LAND AREA IS LESS THAN ONE ACRE.

   DISTURBED LAND AREA = 0.98 AC.

APPROVALS:

CITY OF SPRINGBORO, CITY ENGINEER _____ DATE _____

DEVELOPER:

RIVER VALLEY CREDIT UNION
25 W. CENTRAL AVENUE
SPRINGBORO, OH 45066

P: 937-859-6260

BENCHMARKS

TOPOGRAPHIC, BOUNDARY SURVEY PROVIDED BY IBI GROUP

TWT CP #2	TWT CP #3
CUTS T-2	MAGS T-3
N 571,675.77'	N 571,408.48'
E 1,479,688.24'	E 1,479,589.83'
ELEVATION 805.73'	ELEVATION 801.68'
NAVD83, GEOID 18	NAVD83, GEOID 18

2023 SPECIFICATIONS

THE STANDARD SPECIFICATIONS OF THE STATE OF OHIO, DEPARTMENT OF TRANSPORTATION INCLUDING CHANGES AND SUPPLEMENTAL SPECIFICATIONS LISTED IN THE PROPOSAL SHALL GOVERN THIS IMPROVEMENT.

STANDARD CONSTRUCTION DETAILS

THE STANDARD CONSTRUCTION DRAWINGS LISTED ON THESE
PLANS SHALL BE CONSIDERED A PART THEREOF:

ODOT
CB 3A 07/16/2021

UNDERGROUND UTILITIES
Contact Two Working Days Before You Dig
OHIO811.org Before You Dig
OHIO811, 8-1-1, or 1-800-362-2764
(Non-members must be called directly)

IBI GROUP
8101 North High Street
Suite 100
Columbus, OH 43235
tel 614 818 4900
fax 614 818 4901
Contact: Eric Chenevey Ext: 2041
ibigroup.com

REVISION:

SUBMISSION:

- ☐ PRELIMINARY ENGINEERING SET
- ■ AGENCY REVIEW SET
- ☐ CONSTRUCTION DOCUMENT SET
- ☐ AS-BUILT DOCUMENT SET

STAMP:

STATE OF OHIO
ERIC P. CHENEVEY
E-55806
REGISTERED PROFESSIONAL ENGINEER

WARREN COUNTY, OH 45066

RIVER VALLEY CREDIT UNION

25 WEST CENTRAL AVENUE, SPRNIGBORO

DESIGN	DRAFT	CHECK
WTC	MA	EPC

IBI NO.: 141829

DATE: JUNE 23, 2023

SCALE:

SHEET TITLE: COVERSHEET

SHEET NO.: CS

DEMOLITION SPECIFICATIONS

1. ALL WORK PERFORMED ON THE SITE SHALL CONFORM TO THE SITE CONSTRUCTION PLANS AND SPECIFICATIONS. SITE CONSTRUCTION SHALL BE IN CONFORMANCE WITH APPLICABLE FEDERAL, STATE, COUNTY, CITY/TOWN OR LOCAL AGENCY ORDINANCE REQUIREMENTS, STANDARDS, SPECIFICATIONS, AND DETAILS. WHEN CONFLICTING SPECIFICATIONS ARE FOUND, REPORT TO ENGINEER IMMEDIATELY FOR CLARIFICATION; GENERALLY THOSE SPECIFICATIONS AND DETAILS FOUND IN THE APPLICABLE LOCAL GOVERNMENT JURISDICTION CONSTRUCTION GUIDELINES SHALL PREVAIL IN THE EVENT OF A DISCREPANCY.

2. THE CONTRACTOR SHALL OBTAIN ALL NECESSARY PERMITS AND APPROVALS PRIOR TO THE COMMENCEMENT OF CONSTRUCTION. TIMELY NOTIFICATION OF GOVERNMENTAL AGENCIES REGARDING THE COMMENCEMENT OF CONSTRUCTION ACTIVITY IS REQUIRED. IT SHALL BE THE CONTRACTORS RESPONSIBILITY TO COORDINATE WITH THE OWNER AND TO VERIFY THAT ALL PERMITS HAVE BEEN OBTAINED, AND THAT ALL GOVERNMENTAL AGENCIES HAVE BEEN NOTIFIED. IT SHALL BE THE CONTRACTORS RESPONSIBILITY TO COORDINATE WITH OWNER AND ENGINEER.

3. THE CONTRACTOR SHALL BE RESPONSIBLE FOR ANY LOCAL PERMITS REQUIRED FOR CONSTRUCTION IN PUBLIC RIGHT-OF-WAY OR ANY OTHER PERMITS REQUIRED BY THE LOCAL REGULATORY AGENCIES TO COMPLETE THE CONSTRUCTION AS DETAILED IN THESE PLANS. THE OWNER OR HIS REPRESENTATIVE WILL AID THE CONTRACTOR IN OBTAINING SUCH PERMITS AS MAY BE NECESSARY.

4. A MINIMUM OF 48 HOURS NOTICE WILL BE PROVIDED TO THE APPROPRIATE GOVERNMENTAL AGENCY PRIOR TO CONSTRUCTION, RESTART, OR CHANGE OF OPERATION AND SHALL BE THE RESPONSIBILITY OF THE CONTRACTOR. THE CONTRACTOR MUST FURTHER NOTIFY THE CITY/COUNTY ENGINEER'S OFFICE 48 HOURS PRIOR TO ANY CONSTRUCTION ACTIVITY (INCLUDING UTILITY INSTALLATION) WITHIN EXISTING RIGHT-OF-WAY TO SCHEDULE INSPECTION. ANY WORK WITHIN SAID RIGHT-OF-WAY THAT HAS NOT BEEN INSPECTED WILL BE REJECTED.

5. ANY UTILITY CONNECTIONS THAT REQUIRE CONSTRUCTION WITHIN STATE OF OHIO RIGHT-OF-WAY SHALL REQUIRE AN ODOT PERMIT. IT SHALL BE THE CONTRACTOR'S RESPONSIBILITY TO COORDINATE WITH ENGINEER AND OWNER TO COMPLETE THE PERMIT.

6. A PRE-CONSTRUCTION CONFERENCE INCLUDING THE OWNER, ARCHITECT, ENGINEER, CONTRACTOR, GOVERNMENT OFFICIALS, REPRESENTATIVES OF PRIVATE UTILITY COMPANIES, AND OTHER INTERESTED PARTIES SHALL BE HELD PRIOR TO THE COMMENCEMENT OF CONSTRUCTION.

7. THE OWNER OR HIS REPRESENTATIVE SHALL NOTIFY ALL UTILITY COMPANIES AND THE CONTRACTOR BEFORE THE PRECONSTRUCTION MEETING. NO CONSTRUCTION WILL BEGIN UNTIL SAID PRECONSTRUCTION MEETING HAS BEEN HELD.

8. THE CONTRACTOR SHALL VERIFY ALL DIMENSIONS IN FIELD BEFORE STARTING CONSTRUCTION. THE CONTRACTOR SHALL BE RESPONSIBLE FOR ALL FIELD DIMENSIONS. IF ANY DISCREPANCIES ARE FOUND IN THESE PLANS FROM ACTUAL FIELD CONDITION, THE CONTRACTOR SHALL CONTACT ENGINEER IMMEDIATELY.

9. THE CONTRACTOR IS RESPONSIBLE FOR THE PROTECTION OF ALL EXISTING FEATURES WHICH LIE ALONG THE PERIMETER OF THE SITE. THESE FEATURES INCLUDE, BUT ARE NOT LIMITED TO: BUILDINGS, PAVEMENTS, FENCES, VEGETATION, UTILITIES, PROPERTY MARKERS, ETC. CONTRACTOR IS RESPONSIBLE FOR ANY DAMAGE WHICH OCCURS DURING OR AS A RESULT OF CONSTRUCTION ACTIVITY. REPLACEMENT OF DAMAGED PROPERTY SHALL BE EQUAL TO EXISTING CONDITIONS.

10. UTILITY LOCATIONS SHOWN HEREIN ARE APPROXIMATE LOCATIONS AS LOCATED BY THE VARIOUS UTILITY COMPANIES. CONTRACTOR SHALL VERIFY LOCATION OF ALL UNDERGROUND UTILITIES PRIOR TO EXCAVATION. DURING CONSTRUCTION, ALL UTILITIES SHALL BE ADEQUATELY SUPPORTED TO MINIMIZE DAMAGE. CONTRACTOR SHALL CONTACT THE APPROPRIATE UTILITY OR GOVERNMENTAL AGENCY IMMEDIATELY IF ANY DAMAGE TO EXISTING UTILITIES OCCURS AND SHALL BE RESPONSIBLE FOR REPAIRING THE UTILITY IN ACCORDANCE WITH THE AFFECTED UTILITY'S REPAIR POLICY.

11. THE CONTRACTOR SHALL NOTIFY OHIO UTILITY PROTECTION SERVICE, SEVENTY-TWO (72) HOURS IN ADVANCE OF ANY EXCAVATION BY CALLING 1-800-362-2764 OR 811, OR ON THE INTERNET AT WWW.OUPS.ORG.

12. THE CONTRACTOR SHALL BE RESPONSIBLE FOR MAINTAINING SAFE TRAFFIC CONTROL ON THE ADJACENT PUBLIC STREETS, AS RELATED TO BOTH PHYSICAL SITE IMPROVEMENTS AND THE MOVEMENT OF CONSTRUCTION TRAFFIC. CONSTRUCTION TRAFFIC SHALL ENTER AND EXIT THE SITE FROM THE CONSTRUCTION ENTRANCE AS SHOWN ON THE STORM WATER POLLUTION PREVENTION PLAN.

13. THE CONTRACTOR SHALL BE SOLELY AND COMPLETELY RESPONSIBLE FOR CONDITIONS OF THE JOBSITE AND SAFETY OF ALL PERSONS AND PROPERTY DURING PERFORMANCE OF THE WORK. ALL CONSTRUCTION ACTIVITY AND SAFETY PROVISIONS SHALL CONFORM TO ALL APPLICABLE FEDERAL, STATE, AND LOCAL LAWS, ORDINANCES AND CODES. ALL TRENCHING, PIPE LAYING AND BACKFILLING OPERATIONS SHALL BE IN ACCORDANCE WITH OSHA REGULATIONS.

14. SUFFICIENT SHEETING, SHORING AND BRACING SHALL BE PROVIDED BY THE CONTRACTOR TO ENSURE SAFETY OF THE WORKMEN AND WHEREVER IT IS NECESSARY TO PROTECT AND PRESERVE LIFE, STRUCTURES AND PROPERTY AND COMPLETE THE WORK IN THESE PLANS. THE DESIGN AND INSTALLATION OF SUCH DEVICES SHALL BE COMPLETED UNDER THE DIRECT SUPERVISION OF A QUALIFIED INDIVIDUAL EXPERIENCED IN SUCH WORK.

15. THE CONTRACTOR SHALL BE RESPONSIBLE TO PROVIDE AT HIS EXPENSE ALL AUTOMOBILE AND PEDESTRIAN TRAFFIC CONTROL DEVICES REQUIRED BY FEDERAL, STATE, COUNTY, CITY/TOWN OR LOCAL AGENCY. THE AMOUNT, LOCATION AND SIZE SHALL BE PER DIRECTION OF AGENCY.

16. IT IS THE RESPONSIBILITY OF THE CONTRACTOR TO REMOVE ALL MUD, DIRT, GRAVEL, AND ANY OTHER MATERIALS TRACKED ONTO ANY PUBLIC OR PRIVATE STREETS OR SIDEWALKS. THE CONTRACTOR MUST CLEAN THESE DAILY IF NECESSARY. THE CONTRACTOR MUST USE WATER OR OTHER METHODS TO KEEP AIRBORNE DUST TO A REQUIRED MINIMUM. NO METAL DUMPSTERS SHALL BE PLACED ON STREETS OR PAVED AREAS AFTER CONSTRUCTION.

17. SITE CONSTRUCTION LAYOUT FOR BUILDING FOUNDATIONS, CURBS, STREETS, WATER MAINS, DRAINAGE SWALES, STORM SEWER STRUCTURES, AND SANITARY SEWER MANHOLES SHALL BE FURNISHED BY THE CONTRACTOR AND PERFORMED BY OR UNDER THE SUPERVISION OF A LAND SURVEYOR REGISTERED IN THE STATE OF OHIO.

18. CONTRACTOR SHALL BE RESPONSIBLE FOR CONTACTING AND COORDINATING INSPECTIONS WITH THE APPROPRIATE GOVERNMENTAL AGENCY OR UTILITY IN ACCORDANCE WITH SAID AGENCY'S OR UTILITY'S REQUIREMENTS AND STANDARDS. ALL NECESSARY INSPECTIONS AND CERTIFICATIONS REQUIRED BY ORDINANCE, CODE, UTILITY COMPANIES OR GOVERNMENTAL AGENCIES SHALL BE PERFORMED BEFORE THE FINAL CONNECTION OF SERVICES. THE CONTRACTOR SHALL HAVE ALL WORK OPEN TO INSPECTION OF ALL AGENCIES HAVING JURISDICTION OVER THE PROJECT. CONSTRUCTION WORK SHALL CONFORM TO THE REQUIREMENTS OF SAID AGENCIES. THE CONTRACTOR SHALL PROVIDE SAFE ACCESS TO THE CONSTRUCTION SITE FOR ALL INSPECTORS AND SHALL PROVIDE MATERIAL SAMPLES FOR TESTING, AS REQUIRED. A MINIMUM NOTICE OF 24 HOURS IS REQUIRED BY THE CITY OF SPRINGBORO FOR ANY UTILITY INSPECTIONS.

19. TOPOGRAPHIC AND EXISTING SITE INFORMATION SHOWN IN THESE PLANS HAS BEEN PROVIDED BY THE OWNER AND THE CONTRACTOR ACCEPTS SUCH INFORMATION BY ACCEPTING THIS CONTRACT. IF THE CONTRACTOR BELIEVES A SIGNIFICANT CONFLICT EXISTS BETWEEN SUCH TOPOGRAPHIC INFORMATION AND THE ACTUAL SITE CONDITIONS, HE SHALL SUBMIT A TOPOGRAPHIC SURVEY COMPLETED AND CERTIFIED BY A LAND SURVEYOR REGISTERED IN THE STATE OF NORTH CAROLINA PRIOR TO THE BEGINNING OF ANY CONSTRUCTION AT THE SITE FOR THE OWNER'S REVIEW. FURTHERMORE, THE CONTRACTOR SHALL INFORM HIMSELF OF THE CONDITIONS UNDER WHICH THE WORK IS TO BE PERFORMED, THE SITE OF THE WORK, THE OBSTACLES WHICH MAY BE ENCOUNTERED, AND ALL OTHER RELEVANT MATTERS CONCERNING THE WORK TO BE PERFORMED. THE CONTRACTOR SHALL NOT BE ALLOWED ANY EXTRA COMPENSATION BY REASON OF ANY MATTER OR THING WHICH THE CONTRACTOR MIGHT HAVE FULLY INFORMED HIMSELF, BECAUSE OF HIS FAILURE TO HAVE SO INFORMED HIMSELF PRIOR TO BIDDING THE JOB. IT IS UNDERSTOOD AND AGREED THAT THE OWNER DOES NOT WARRANT OR GUARANTEE THAT THE MATERIALS AND CONDITIONS ENCOUNTERED DURING CONSTRUCTION WILL BE THE SAME AS INDICATED BY THE INFORMATION SHOWN ON THESE DRAWINGS. THE CONTRACTOR MUST SATISFY HIMSELF REGARDING THE CHARACTER, QUANTITIES, AND CONDITIONS OF THE VARIOUS MATERIALS AND WORK TO BE DONE.

20. ELEVATIONS OF ALL EXISTING FACILITIES SHALL BE FIELD VERIFIED BY THE CONTRACTOR PRIOR TO THE START OF CONSTRUCTION.

21. IN GENERAL, ALL OPEN TRENCHES OR SIMILAR EXCAVATIONS SHALL BE FILLED AT THE END OF THE DAY'S WORK OR OTHER SPECIFIC OPERATIONS. WHEN THIS IS NOT POSSIBLE OR PRACTICAL, ALL OPEN TRENCHES OR SIMILAR EXCAVATIONS SHALL BE ADEQUATELY FENCED OR "CAUTION" TAPED AT THE END OF EACH DAY'S WORK OR DURING OTHER TIMES WHEN THE CONTRACTOR IS NOT ACTIVELY WORKING AT THE SITE.

22. CONTRACTOR SHALL INDEMNIFY AND SAVE AND HOLD OWNER HARMLESS FROM ANY LOSS, COSTS, CLAIMS OR EXPENSES (INCLUDING BUT NOT LIMITED TO, ATTORNEY'S FEES AND COURT COSTS) ARISING OUT OF OR IN CONNECTION WITH ANY MECHANICS' LIEN FILED BY A SUBCONTRACTOR OR MATERIAL OR EQUIPMENT SUPPLIER ENGAGED OR EMPLOYED IN CONNECTION WITH THE WORK IN THESE PLANS OR WITH SUBSEQUENT CHANGE ORDERS; EXCEPT THIS INDEMNIFICATION SHALL NOT BE ENFORCEABLE DURING ANY PERIOD OF TIME THAT THE OWNER IS IN DEFAULT IN FAILING TO MAKE PAYMENTS WHEN DUE THE CONTRACTOR UNDER THEIR MUTUAL AGREEMENT.

23. ANY BONDS OR INSURANCE REQUIRED BY ANY GOVERNMENTAL AGENCY, UTILITY OR OTHER AGENCY FOR THE COMPLETED WORK SHALL BE THE RESPONSIBILITY OF THE CONTRACTOR.

24. ALL AREAS DISTURBED BY THE CONSTRUCTION PROCESS SHALL BE RESTORED TO THE CONDITION THAT EXISTED PRIOR TO CONSTRUCTION, AS APPLICABLE. BACKFILLING SHALL BE TO THE GRADE OF THE EXISTING GROUND LEVEL OR TO THE GRADE AS ESTABLISHED BY THE PROPERTY OWNER IN THE EVENT THE PROPERTY OWNER PERMITS THE DEPOSIT OF EXCESS MATERIAL UPON HIS LAND, UNLESS SPECIFICALLY DIRECTED OTHERWISE IN THESE PLANS.

25. THE CONTRACTOR SHALL CONFINE HIS WORK TO THE PROPERTY AND CONSTRUCTION LIMITS SHOWN IN THESE PLANS AND WITHIN APPLICABLE PUBLIC RIGHT-OF-WAY AND EASEMENT LIMITS. IF THE METHODS OF CONSTRUCTION EMPLOYED BY THE CONTRACTOR ARE SUCH AS TO REQUIRE THE USE OF ANY ADDITIONAL LAND, HE SHALL MAKE HIS OWN ARRANGEMENTS WITH THE PROPERTY OWNERS AFFECTED FOR THE USE OF SUCH ADDITIONAL LAND.

26. IN THE EVENT THAT THE OWNER LETS OTHER CONTRACTS IN CONNECTION WITH THE WORK OF THE CONTRACTOR, THE CONTRACTOR SHALL COOPERATE WITH OTHER CONTRACTORS WITH REGARD TO STORAGE OF MATERIALS AND EXECUTION OF THEIR WORK.

27. UNLESS OTHERWISE SPECIFIED, ALL MATERIALS AND EQUIPMENT INSTALLED ON THE PROJECT SHALL BE NEW AND BOTH WORKMANSHIP AND MATERIAL SHALL BE OF GOOD QUALITY. MANUFACTURED MATERIALS AND EQUIPMENT SHALL BE APPLIED, INSTALLED AND CONSTRUCTED AS DIRECTED BY THE MANUFACTURER'S GUIDELINES AND RECOMMENDATIONS. WHEREVER PROPRIETARY EQUIPMENT IS SPECIFIED OR "APPROVED EQUAL" IS IMPLIED, ALL PROPOSALS FOR SUBSTITUTION SHALL BE SUBMITTED TO THE APPROPRIATE AGENCY IN WRITING FOR THEIR APPROVAL.

28. UPON FAILURE TO PERFORM THE WORK IN ACCORDANCE WITH THESE CONSTRUCTION PLANS AND SPECIFICATIONS, AND AFTER FIVE (5) DAYS WRITTEN NOTICE TO THE CONTRACTOR, THE OWNER MAY, WITHOUT PREJUDICE TO ANY OTHER REMEDY HE MAY HAVE, CORRECT SUCH DEFICIENCIES IN WORK INTENDED TO BECOME A PERMANENT PART OF THE PROJECT. THE COST TO CORRECT SUCH DEFICIENCIES MAY BE DEDUCTED FROM THE PAYMENT DUE THE CONTRACTOR.

29. THE OWNER SHALL HAVE THE AUTHORITY TO SUSPEND THE WORK WHOLLY OR IN PART, FOR SUCH PERIOD OR PERIODS AS HE MAY DEEM NECESSARY DUE TO UNSUITABLE WEATHER OR SUCH OTHER CONDITIONS AS ARE CONSIDERED UNFAVORABLE TO CARRY OUT THE PROVISIONS OF THE WORK.

30. THE CONTRACTOR, PROMPTLY AFTER BEING AWARDED THE CONTRACT, SHALL PREPARE AND SUBMIT FOR THE OWNER'S AND SURVEYOR'S INFORMATION A CONTRACTOR'S CONSTRUCTION SCHEDULE FOR THE WORK. THE CONTRACTOR SHALL PERFORM THE WORK ACCORDING TO SAID SCHEDULE AS MUCH AS POSSIBLE.

31. THE CONTRACTOR IS RESPONSIBLE TO THE OWNER FOR THE WORK OF HIS SUBCONTRACTORS, AS APPLICABLE, AND OF THEIR DIRECT AND INDIRECT EMPLOYEES TO THE SAME EXTENT AS HE IS RESPONSIBLE FOR THE WORK OF HIS EMPLOYEES. THE CONTRACTOR SHALL BIND ANY SUBCONTRACTOR BY THE TERMS OF THESE CONSTRUCTION PLANS AND SPECIFICATIONS.

32. THE CONTRACTOR SHALL REMOVE FROM THE OWNER'S PROPERTY, AND FROM ALL PUBLIC AND PRIVATE PROPERTY, ALL TEMPORARY STRUCTURES, RUBBISH, AND WASTE MATERIALS RESULTING FROM HIS OPERATION OR CAUSED BY HIS EMPLOYEES, ALL OF HIS EQUIPMENT, TOOLS AND SUPPLIES, AND ALL SURPLUS MATERIALS (UNLESS OTHERWISE DIRECTED IN THESE PLANS OR DIRECTED BY THE OWNER) LEAVING THE SITE SMOOTH, CLEAN AND TRUE TO LINE AND GRADE.

33. ALL WORK SHALL BE PERFORMED IN STRICT ACCORDANCE WITH THESE CONSTRUCTION PLANS AND SPECIFICATIONS AND SHALL BE COMPLETED UNDER THE DIRECT SUPERVISION OF THE CONTRACTOR. CHANGE ORDERS OR REVISED CONSTRUCTION PLANS SHALL BE AS APPROVED BY THE OWNER AND ANY APPLICABLE GOVERNMENT AGENCY OR UTILITY AND MAY BE ISSUED BY THE OWNER PRIOR TO THE COMPLETION OF THE PORTION OF THE WORK AFFECTED BY SUCH CHANGE. PAYMENT FOR CHANGE ORDERS SHALL BE AS NEGOTIATED BY THE CONTRACTOR AND THE OWNER PRIOR TO BEGINNING SUCH WORK. THE MOST RESTRICTIVE OF THE FOLLOWING TOLERANCE SPECIFICATIONS SHALL APPLY TO ALL INFRASTRUCTURE CONSTRUCTED ON THIS PROJECT: (A.) CONTRACTOR SHALL COMPLETE FINISHED GRADING AND PUBLIC IMPROVEMENTS, SUCH AS SEWERS AND STREETS, TO WITHIN 0.1 FEET OF THE ELEVATIONS CONTAINED IN THESE PLANS. (B.) CONTRACTOR SHALL COMPLETE INSTALLATION OF STREET AND SEWER TO THE GRADES (SLOPES) CONTAINED IN THESE PLANS SUCH THAT THEY DEVIATE BY NO MORE THAN 10% FROM THEIR DESIGN GRADE (SLOPE)-E.G. A DESIGN GRADE OF 0.50% SHALL BE CONSTRUCTED BETWEEN 0.45% AND 0.55%. THE CONTRACTOR SHALL BE REQUIRED TO REWORK ANY AREA THAT DOES NOT MEET THESE TOLERANCES AT HIS EXPENSE UNTIL COMPLIANCE IS OBTAINED. THIS SPECIFICATION DOES NOT ALLOW THE ENTIRE PROJECT TO BE CONSTRUCTED AT SUCH LIMITS (E.G. CONSTRUCT THE ENTIRE PROJECT 0.1-FOOT BELOW DESIGN ELEVATIONS). IN GENERAL, CONTRACTOR SHALL CONSTRUCT STRICTLY TO THE DESIGN GRADES AND ELEVATIONS CONTAINED IN THESE PLANS BUT THE ABOVE LIMITS ARE BEING ESTABLISHED AS A MINIMUM CONSTRUCTION REQUIREMENT TO ENSURE PROPER DRAINAGE AND FUNCTIONALITY OF THE CONSTRUCTED INFRASTRUCTURE. DEVIATIONS IN EXCESS OF THESE LIMITS REQUIRE APPROVAL OF THE OWNER AND ENGINEER/SURVEYOR AND/OR GOVERNMENTAL AGENCY OR UTILITY HAVING JURISDICTION OVER THE PROJECT AND WILL BE GRANTED ONLY IF PROPER FUNCTIONALITY OF THE INFRASTRUCTURE CAN BE SHOWN AND ALL APPLICABLE COVER, SEPARATION, AND OTHER CONSTRUCTION REQUIREMENTS SPECIFIED IN THESE PLANS ARE MET.

34. THE OWNER SHALL HAVE THE RIGHT TO TAKE POSSESSION OF AND USE ANY COMPLETED OR PARTIALLY COMPLETED PORTION OF THE WORK AS NEGOTIATED WITH THE CONTRACTOR PRIOR TO ACCEPTANCE OF THE WORK. SUCH POSSESSION AND USE SHALL IN NO CASE BE DEEMED ACCEPTANCE OF ANY WORK NOT IN COMPLIANCE WITH THESE PLANS AND SPECIFICATIONS.

35. ANY PLAN CONFLICTS SHALL BE SUBMITTED IN WRITING IMMEDIATELY TO RIVER VALLEY CREDIT UNION, BERARDI+PARTNERS, AND IBI GROUP FOR REVIEW.

36. AS-BUILT CONSTRUCTION DRAWINGS SHALL BE FURNISHED TO THE OWNER BY THE CONTRACTOR AND SHALL BE PERFORMED BY A LAND SURVEYING FIRM WITH A LAND SURVEYOR REGISTERED IN THE STATE OF NORTH CAROLINA. THE CONTRACTOR SHALL ASSIST THE OWNER IN PREPARING THE AS-BUILT DRAWINGS AND SHALL BE REQUIRED TO KEEP AN AS-BUILT RECORD DURING CONSTRUCTION AND INFORMATION REQUIRED FOR PREPARING SUCH RECORD SHALL BE RECORDED PRIOR TO THE BACKFILLING OF THE UNDERGROUND FACILITY. SEE SPECIFIC SECTIONS ELSEWHERE IN THESE SPECIFICATIONS FOR SPECIFIC AS-BUILT INFORMATION REQUIRED. AS-BUILT FIELD DATA SHALL BE COLLECTED AND DRAWINGS SHALL ONLY BE COMPLETED AND ISSUED ONCE. ANY EXPENSE FOR ADDITIONAL FIELD DATA OR REISSUANCE OF AS-BUILTS SHALL BE THE RESPONSIBILITY OF THE CONTRACTOR.

IBI GROUP
8101 North High Street
Suite 100
Columbus, OH 43235
tel 614 818 4900
fax 614 818 4901
Contact: Eric Chenevey Ext: 2041
ibigroup.com

REVISION:

SUBMISSION:

- ☐ PRELIMINARY ENGINEERING SET
- ■ AGENCY REVIEW SET
- ☐ CONSTRUCTION DOCUMENT SET
- ☐ AS-BUILT DOCUMENT SET

STAMP:

STATE OF OHIO
ERIC P. CHENEVEY
E-55806
REGISTERED
PROFESSIONAL ENGINEER

WARREN COUNTY, OH 45066

RIVER VALLEY CREDIT UNION

25 WEST CENTRAL AVENUE, SPRNIGBORO

DESIGN	DRAFT	CHECK
WTC	MA	EPC

IBI NO.: 141829

DATE: JUNE 23, 2023

SCALE:

SHEET TITLE: GENERAL NOTES

SHEET NO.: C001

DEMOLITION SPECIFICATIONS

1. CONTRACTOR SHALL USE REASONABLE MEASURES TO MINIMIZE DISTURBANCE OF BUILDINGS, TREES, VEGETATION AND SITE IMPROVEMENTS ADJACENT TO CONSTRUCTION AREAS. OWNER SHALL DESIGNATE SUITABLE AREAS WITHIN THE PROPERTY FOR USE IN THE STORAGE, STAGING AND STOCKPILING OF MATERIALS. EXCAVATION, TRENCHING, AND USE OF HEAVY EQUIPMENT ON THE GROUND UNDER TREES TO BE PRESERVED SHALL BE MINIMIZED.

2. TREE PROTECTION SHALL BE IN PLACE FOR THE TREES THAT WILL BE SAVED BEFORE CONSTRUCTION BEGINS. FENCING SHALL BE INSTALLED AT LEAST TO THE DRIP LINE OF THE TREES TO PROTECT THE ROOT ZONE. NO EQUIPMENT SHALL BE ALLOWED TO DRIVE OVER THAT ROOT ZONE. NO STORAGE OF MATERIALS OR VEHICLES SHALL BE ALLOWED WITHIN THE FENCE LINE.

3. BRUSH, TREES, STUMPS AND GRUBBING DEBRIS SHALL BE REMOVED AS NECESSARY TO COMPLETE THE WORK IN THESE PLANS OR AS MAY BE DIRECTED BY THE OWNER. NO ON-SITE DISPOSAL SHALL BE ALLOWED. NO BURNING SHALL BE ALLOWED. EXISTING TREES ON THE SITE SHALL BE PRESERVED AT THE OWNER'S DISCRETION.

4. DISPOSAL AND REMOVAL OF MATERIALS FROM SITE SHALL BE IN ACCORDANCE WITH APPLICABLE STATE AND FEDERAL GUIDELINES.

5. WHEN SAW CUTTING EXISTING CONCRETE PAVEMENT, CONTRACTOR SHALL LOCATE SAWCUTS ALONG EXISTING EXPANSION JOINTS WHEN FEASIBLE.

EARTHWORK, SUBGRADE, AND TRENCHING SPECIFICATIONS

1. EARTHWORK SHALL BE COMPLETED IN ACCORDANCE WITH ODOT STANDARD SPECIFICATIONS. THE CONTRACTOR SHALL NOTIFY THE ENGINEER'S OFFICE AND THE OWNER AT LEAST 48 HOURS BEFORE BEGINNING EXCAVATION AND EMBANKMENT CONSTRUCTION.

2. CONTRACTOR SHALL COMPLY WITH ALL STATE AND LOCAL STORM WATER POLLUTION PREVENTION ORDINANCES THAT APPLY. ALL EROSION AND SEDIMENT CONTROL MEASURES AND DEVICES SHALL BE INSTALLED AND MAINTAINED IN ACCORDANCE WITH THIS PROJECTS STORM WATER POLLUTION PREVENTION PLAN.

3. THE CONTRACTOR SHALL EMPLOY A QUALIFIED GEOTECHNICAL ENGINEER FOR THE INSPECTION OF ALL BUILDING PADS AND FOR THE INSPECTION OF SUBGRADES AND COMPACTED FILLS AS REQUIRED BY THESE SPECIFICATIONS. THE GEOTECHNICAL ENGINEER WILL INSPECT SOIL CONDITIONS, PROOF-ROLLING, AND FIELD DENSITY OF COMPACTED FILLS. ALL SUBGRADES AND FILLS SHALL MEET OR EXCEED THE SPECIFIED DENSITIES, AS DISCUSSED BELOW. BASED UPON REPORTS FROM THE GEOTECHNICAL ENGINEER, SUBGRADES OR FILLS WHICH ARE BELOW SPECIFIED DENSITIES WILL REQUIRE ADDITIONAL COMPACTION WORK AND TESTING AT NO ADDITIONAL EXPENSE TO THE OWNER. COMPACTION TESTS SHALL BE TAKEN AT RANDOM INTERVALS AND ELEVATIONS THROUGHOUT THE FILL EMBANKMENTS.

4. EXCESS MATERIAL FROM THE EXCAVATIONS AND MASS EARTHWORK OR CLEARED MATERIAL UNSUITABLE FOR FILLING SHALL BE REMOVED FROM THE SITE AND DONE SO AT THE CONTRACTOR'S EXPENSE.

5. CONTRACTOR SHALL INCLUDE A SEPARATE ITEM IN HIS BID SHOWING THE ANTICIPATED EARTHWORK QUANTITIES (NET EXCESS ONSITE OR IMPORT MATERIAL TO CONFORM TO THIS GRADING PLAN) AND SHALL COORDINATE REMOVAL AND/OR TEMPORARY STOCKPILING OF EXCESS ONSITE MATERIALS WITH THE OWNER PRIOR TO ACCEPTING THE JOB. IN ANY CASE WHEN EXCESS ONSITE MATERIAL IS ANTICIPATED, CONTRACTOR SHALL INCLUDE A SEPARATE AND ADDITIONAL ITEM IN HIS BID FOR REMOVAL OF EXCESS ONSITE MATERIAL.

6. CONTRACTOR SHALL BE RESPONSIBLE FOR GRADING THE SITE IN ACCORDANCE WITH THE GRADING PLANS CONTAINED IN THIS CONSTRUCTION SET. ANY REMAINING TOPSOIL STOCKPILES AND OVERBURDEN MATERIAL SHALL BE REMOVED FROM THE SITE UPON COMPLETION OF THE PROJECT. CONTRACTOR SHALL NOT BE ALLOWED ANY EXTRA COMPENSATION FOR SATISFYING THIS SPECIFICATION.

7. IN CASES WHEN THERE IS EXCESS ONSITE MATERIAL AND IF THE ENGINEER/GEOTECHNICAL ENGINEER DETERMINES THE MATERIAL IS SUITABLE FOR LANDSCAPING, THE CONTRACTOR SHALL ANTICIPATE USING A PORTION OF SUCH MATERIAL TO PLACE LANDSCAPING MOUNDS WITHIN THE CURBED AREAS OF THE PROJECT AND SHALL DO SO AT THE OWNER'S DISCRETION. ANY SUCH LANDSCAPING SHALL BE APPROVED IN WRITING BY THE ENGINEER AND SHALL NOT ALTER THE DRAINAGE PATTERNS AS SHOWN ON THE APPROVED GRADING PLAN.

8. CONSTRUCTION AS-BUILT DRAWINGS SHALL INCLUDE AS-BUILT ELEVATIONS FOR DRAINAGE SWALES SERVING MORE THAN THEIR OWN SINGLE LOT, CONTOURS ON A ONE-FOOT INTERVAL, AND AS-BUILT STORM SEWER SYSTEM, TOP OF CASTING AT INVERT ELEVATIONS.

9. CONTRACTOR SHALL ENSURE THAT POSITIVE DRAINAGE IS ACHIEVED ON ALL FINAL SURFACES. IN THE EVENT OF GRADING DISCREPANCIES ON THIS PLAN, CONTRACTOR SHALL NOTIFY ENGINEER IMMEDIATELY FOR RESOLUTION.

10. THE EXCAVATING CONTRACTOR MUST TAKE PARTICULAR CARE WHILE EXCAVATING AROUND EXISTING TREES SO NOT TO DISTURB AND TO MINIMIZE OR ELIMINATE DAMAGE TO ROOT SYSTEM.

11. THE EXCAVATING CONTRACTOR MUST TAKE PARTICULAR CARE WHEN EXCAVATING IN AND AROUND EXISTING UTILITY LINES AND EQUIPMENT. VERIFY COVER REQUIREMENTS BY UTILITY CONTRACTORS AND/OR UTILITY COMPANIES SO NOT TO CAUSE DAMAGE.

12. CONTRACTOR WILL REMOVE TOPSOIL FROM ALL AREAS OF EXCAVATION AND WITHIN 3 FEET OF BACK OF CURB OR BUILDING PADS AND STOCKPILE ON SITE AT A LOCATION DESIGNATED IN THESE PLANS OR AS PRESCRIBED BY THE OWNER. DURING FINAL LOT GRADING CONTRACTOR WILL RETRIEVE TOPSOIL FROM STOCKPILE AND SPREAD ONTO THE LANDSCAPED AREAS, AND ANY OTHER AREAS REQUIRING PERMANENT SEEDING.

13. IT IS BELIEVED THAT THERE IS NO TOPSOIL PRESENT ON THE LOT SINCE THE PREVIOUS DEVELOPER HAD PLACED STRUCTURAL FILL ACROSS LOT TO SELL AS PAD READY. TOPSOIL SHALL BE STRIPPED AND STOCKPILED FOR USE DURING FINISH GRADING AND LANDSCAPE WORK. TOPSOIL IS DEFINED AS FERTILE, FRIABLE NATURAL LOAM SURFACE SOILS, REASONABLY FREE OF SUBSOIL, CLAY LUMPS, BRUSH, AND OTHER LITTER OR STONES LARGER THAN 1/2 INCH. LOOSE DEBRIS, TOPSOILS AND UNSUITABLE SUBSOILS SHALL BE STRIPPED FROM AREAS OF THE SITE THAT ARE TO BE DEVELOPED. THE CONTRACTOR SHOULD REVIEW THE GEOTECHNICAL REPORT, AS THE DEPTH OF STRIPPING OF SURFACE SOILS MAY VARY BY LOCATION WITHIN THE SITE. THE ENGINEER SHALL DESIGNATE ON-SITE LOCATIONS TO STORE OR DEPOSIT STRIPPED SOILS. CONTRACTOR SHALL REMOVE TOPSOILS AND UNSUITABLE SUBSOILS FROM ALL AREAS TO BE OCCUPIED BY BUILDINGS AND PAVEMENTS. IN ADDITION, ANY AREAS TO BE UTILIZED AS BORROW AREAS FOR FILL MATERIAL MUST ALSO BE STRIPPED OF TOPSOILS. A MINIMUM OF 6 INCHES OF TOPSOIL SHALL BE REPLACED IN LAWN AND LANDSCAPED AREAS. IF THE AMOUNT OF STOCKPILED TOPSOIL EXCEEDS QUANTITY REQUIRED, THE EXCESS SHALL BE SPREAD ON THE SITE WHERE DIRECTED BY THE ENGINEER.

14. AFTER THE PAVEMENT AREAS HAVE BEEN STRIPPED, FILLED, AND COMPACTED, THESE AREAS SHALL BE PROOF-ROLLED WITH A MEDIUM WEIGHT ROLLER OR EQUIVALENT EQUIPMENT TO DETERMINE IF ANY POCKETS OF SOFT, YIELDING, OR UNSUITABLE MATERIAL ARE PRESENT. THE GEOTECHNICAL ENGINEER OR A REPRESENTATIVE APPOINTED BY THE OWNER AND APPROVED BY THE ENGINEER SHALL BE PRESENT FOR THE PROOF-ROLLING. IF UNSUITABLE MATERIALS ARE ENCOUNTERED, THEY SHALL BE REMOVED AND REPLACED WITH SPOT SUBGRADE REINFORCEMENT OR COMPACTABLE GRANULAR FILL.

15. SUBGRADE REPLACEMENT SHALL BE ILLUSTRATED ON AS-BUILT DRAWINGS AND SHALL INCLUDE THE DEPTH, TYPE OF GRANULAR FILL UTILIZED AND AREA.

16. WHERE BORROW IS SPECIFIED IN THESE PLANS, DETAILS, OR SPECIFICATIONS, IT SHALL BE DEFINED AS FOLLOWS: THE MATERIAL USED FOR SPECIAL FILLING SHALL BE OF ACCEPTABLE QUALITY, FREE FROM LARGE OR FROZEN LUMPS, WOOD, OR OTHER EXTRANEOUS MATTER. IT SHALL CONSIST OF SUITABLE SAND, 20 GRAVEL, CRUSHED STONE, ACBF, GBF, OR OTHER APPROVED MATERIAL. THE MATERIAL SHALL CONTAIN NO MORE THAN 10% PASSING THE NO. 200 (75 μ m) SIEVE AND SHALL BE OTHERWISE SUITABLY GRADED. THE USE OF AN ESSENTIALLY ONE-SIZE MATERIAL WILL NOT BE PERMITTED UNLESS APPROVED.

17. ALL COMPACTED FILL MATERIAL SHALL BE SATISFACTORY BORROW SOILS APPROVED BY THE GEOTECHNICAL ENGINEER. REFER TO THE DETAILS FOR STONE TYPE AND DEPTH FOR THE SUBGRADE STONE FOR PAVEMENTS. ALL FILL MATERIAL SHALL BE FREE OF ORGANIC MATTER, FROZEN MATERIAL, LARGE ROCK GREATER THAN 3 INCHES, RUBBISH, SLAG, OR OTHER UNSUITABLE MATERIAL. SAMPLES OF THE FILL MATERIALS SHALL BE SUBMITTED TO THE GEOTECHNICAL ENGINEER FOR APPROVAL PRIOR TO PLACEMENT. ALL FILL EMBANKMENTS UNDER PAVED AREAS, SIDEWALKS, AND PADS SHALL BE PLACED IN LIFTS NOT TO EXCEED 8 INCHES IN LOOSE THICKNESS AND COMPACTED TO 100% OF MAXIMUM DRY DENSITY IN ACCORDANCE WITH ASTM DENSITY TEST D-1557. THE TOP 12 INCHES OF BUILDING SUBGRADE AND EACH 8 INCH LAYER OF BUILDING FILL EMBANKMENTS SHALL BE COMPACTED TO 100% MAXIMUM DRY DENSITY. THE AREA OF COMPACTED FILL FOR THE BUILDING SHALL EXTEND AT LEAST 5 FEET BEYOND THE EXTERIOR WALLS. FILL IN LAWN OR LANDSCAPE AREAS SHALL BE COMPACTED TO 93% MAXIMUM DRY DENSITY. FILL MATERIALS SHALL BE PLACED IN LIFTS NOT TO EXCEED 8 INCHES IN LOOSE THICKNESS AND SHOULD BE SPRINKLED WITH WATER AS REQUIRED TO ENSURE COMPACTION SPECIFICATIONS ARE MET. EXCESSIVELY WET MATERIAL SHALL BE SPREAD AND DRIED SUFFICIENTLY SO THAT THE MOISTURE CONTENT WILL PERMIT PROPER COMPACTION. EACH LAYER SHALL BE UNIFORMLY COMPACTED USING A VIBRATORY COMPACTOR OR OTHER APPROVED EQUIPMENT SUITED TO THE LOCATION AND MATERIAL BEING PLACED. UNDER NO CIRCUMSTANCES SHOULD A BULLDOZER OR SIMILAR TRACKED VEHICLES BE USED AS COMPACTING EQUIPMENT. LIFTS SHALL NOT EXCEED 4 INCHES IN LOOSE THICKNESS FOR MATERIAL COMPACTED BY HAND-OPERATED TAMPERS.

EARTHWORK, SUBGRADE, AND TRENCHING SPECIFICATIONS (CONTINUED)

18. IN-PLACE DENSITY TESTS SHALL BE PERFORMED THROUGHOUT THE BUILDING FILL EMBANKMENTS. AT EACH COMPACTED FILL AND BACKFILL LAYER, AT LEAST ONE DENSITY TEST SHALL BE PERFORMED FOR EVERY 2000 SQ. FT OF BUILDING FILL OR SUBGRADE, BUT IN NO CASE FEWER THAN 3 TESTS. WHERE THE RESULTS OF THE IN-PLACE DENSITY TESTS INDICATE COMPACTION SPECIFICATIONS ARE NOT OBTAINED, OR WHERE APPROVED COMPACTED FILLS ARE DISTURBED BY THE CONTRACTOR'S SUBSEQUENT ACTIVITY OR ADVERSE WEATHER, THOSE AREAS SHALL BE REWORKED UNTIL COMPACTION CRITERIA ARE ACHIEVED. THE GEOTECHNICAL ENGINEER SHALL ISSUE A REPORT DOCUMENTING THE SUFFICIENCY OF THE FINAL COMPACTED FILL TO THE OWNER AND THE PROJECT ENGINEER.

19. IN AREAS WHERE THE PAVEMENT SUBGRADE ELEVATIONS ARE ACHIEVED WITHOUT FILL OPERATIONS, THESE AREAS SHALL BE PROOF-ROLLED WITH A MEDIUM WEIGHT ROLLER OR OTHER APPROVED EQUIPMENT TO DETERMINE IF ANY POCKETS OF SOFT, UNSUITABLE MATERIALS ARE PRESENT. IF POCKETS OF UNSUITABLE MATERIALS ARE ENCOUNTERED, THEY SHALL BE REMOVED AND REPLACED WITH SPOT SUBGRADE REINFORCEMENT OR COMPACTED GRANULAR FILL. THE GEOTECHNICAL ENGINEER OR A REPRESENTATIVE APPOINTED BY THE OWNER AND APPROVED BY THE ENGINEER SHALL BE PRESENT DURING PROOF-ROLLING OPERATIONS AND SHALL SUBMIT A REPORT OF ACCEPTANCE TO THE ENGINEER AND OWNER.

20. WHERE PREVIOUSLY APPROVED AND COMPACTED SUBGRADES ARE DISTURBED BY CONTRACTOR'S SUBSEQUENT ACTIVITY OR ADVERSE WEATHER, THE SUBGRADES SHALL BE SCARIFIED AND RECOMPACTED AS SPECIFIED ABOVE PRIOR TO THE CONTINUATION OF CONSTRUCTION.

21. EXCAVATE FOR STRUCTURES TO WITHIN 0.1 FOOT OF THE DESIGN ELEVATIONS AND DIMENSIONS. EXTEND EXCAVATIONS A SUFFICIENT DISTANCE FROM STRUCTURES FOR PLACING AND REMOVING CONCRETE FORMWORK. DO NOT DISTURB THE BOTTOM OF THE EXCAVATION INTENDED FOR BEARING SURFACE. EXCAVATE BY HAND TO FINAL GRADE BEFORE PLACING CONCRETE FORMWORK AND REINFORCEMENT SO FOOTINGS AND FOUNDATIONS BEAR ON UNDISTURBED COMPACTED SOILS.

22. BACKFILL MATERIAL SHALL BE FREE OF ORGANIC MATTER, FROZEN MATERIAL, LARGE ROCK GREATER THAN 2 INCHES, SLAG, RUBBISH, OR OTHER UNSUITABLE MATERIAL. BACKFILL SHALL BE PLACED IN LAYERS NOT TO EXCEED 6 INCHES LOOSE THICKNESS AND THOROUGHLY COMPACTED BY TAMPING OR ROLLING. WHERE BACKFILLING IS REQUIRED ON BOTH SIDES OF A FOUNDATION OR RETAINING WALL, THE BACKFILL MATERIAL SHALL BE PLACED EQUALLY ON BOTH SIDES TO AVOID UNBALANCED SOIL PRESSURE ON ONE SIDE OF THE WALL.

23. TRENCHING FOR ALL PIPE SHALL BE ACCOMPLISHED IN ACCORDANCE WITH THESE PLANS WITH THE SIDES KEPT NEARLY AS VERTICAL AS POSSIBLE. LEDGE ROCK, BOULDERS, AND LARGE STONES SHALL BE REMOVED TO PROVIDE A MINIMUM CLEARANCE AS SHOWN ON THE BEDDING DETAILS IN THESE PLANS ON ALL SIDES OF ALL PIPES. ALL WATER ENTERING THE EXCAVATIONS OR OTHER PARTS OF THE WORK SHALL BE REMOVED UNTIL ALL THE WORK HAS BEEN COMPLETED. NO PIPE SHALL BE USED FOR THE DISPOSAL OF TRENCH WATER. EXCAVATIONS SHALL BE KEPT FREE FROM WATER UNTIL THE STRUCTURES TO BE BUILT THEREIN ARE COMPLETED AND WILL SAFELY WITHSTAND FORCES FROM SAID WATER. THE CONTRACTOR SHALL PROVIDE SUFFICIENT DEWATERING EQUIPMENT AND MAKE NECESSARY ARRANGEMENTS FOR THE DISPOSAL OF SAID WATER WITHOUT UNDUE INTERFERENCE WITH OTHER WORK OR DAMAGE TO PROPERTY.

24. TRENCHES UNDER PAVED AREAS (EXCLUDING SIDEWALKS) SHALL BE BACKFILLED WITH GRANULAR MATERIAL IN ACCORDANCE WITH ODOT STANDARD SPECIFICATIONS, AND COMPACTED IN LIFTS TO 98% STANDARD PROCTOR. GRANULAR MATERIAL SHALL EXTEND 5 FT BEYOND THE LIMITS OF THE PAVED AREA WITH A 1:1 OUTWARD SLOPE TO THE BOTTOM OF THE TRENCH. WHEN THE TRENCH IS PARALLEL TO THE EDGE OF A PAVEMENT AREA, GRANULAR MATERIAL SHALL BE REQUIRED WITHIN 3 FEET FROM BACK OF CURB (TO THE LEADING EDGE OF THE TRENCH). GRANULAR BEDDING IS REQUIRED UNDER ALL PAVED AREAS.

25. TRENCHES OUTSIDE OF PAVED AREAS (EXCLUDING SIDEWALKS) SHALL BE BACKFILLED WITH SUITABLE MATERIAL, COMPACTED TO WITHIN SIX (6) INCHES OF THE FINISHED GROUND SURFACE; TOPSOIL SHALL BE USED TO BRING THE SURFACE TO FINISH GRADE. IF SPOIL MATERIAL IS ENCOUNTERED AND FOUND TO BE UNACCEPTABLE FOR BACKFILL, THEN GRANULAR MATERIAL SHALL BE USED.

26. BACKFILL AND BEDDING FOR FLEXIBLE PIPE CONDUIT MATERIALS SHALL BE GRANULAR MATERIAL IN ACCORDANCE WITH THE STANDARD BEDDING DETAILS CONTAINED HEREIN. BACKFILL FOR PIPES IN SHALLOW CONDITION (LESS THAN 2 FEET OF COVER) SHALL BE PLACED IN LIFTS NOT TO EXCEED 8 INCHES IN LOOSE THICKNESS AND COMPACTED TO 100% OF MAXIMUM DRY DENSITY IN ACCORDANCE WITH ASTM DENSITY TEST D-1557.

27. FOLLOWING THE COMPLETION OF SITE GRADING AND SUBSURFACE UTILITY INSTALLATION; CONTRACTOR SHALL SUPPLY AND INSTALL TOPSOIL FILL IN AREAS DESIGNATED FOR SEEDING, SODDING, OR LANDSCAPING, TO THE FINISH GRADES INDICATED ON THE GRADING PLAN AND TO A MINIMUM DEPTH OF 6 INCHES. THE FINISHED SURFACE SHALL BE UNIFORMLY AND SMOOTHLY GRADED AND SHALL BE FREE OF DEPRESSED AREAS WHERE WATER WILL POND. LIGHTLY COMPACT TOPSOIL AFTER PLACEMENT. THE FINISHED SURFACE GRADES SHALL NOT BE MORE THAN 0.1 FOOT ABOVE OR BELOW THE GRADES INDICATED ON THE PLANS. PROVIDE A SMOOTH TRANSITION BETWEEN EXISTING GRADES AND ADJACENT FILL.

28. NOTE: DUE TO THE LACK OF TOPSOIL PRESENT ONSITE, THE CONTRACTOR SHALL IMPORT TOPSOIL TO SPREAD IN ALL LANDSCAPED AND LAWN AREAS. CONTRACTOR WILL BACKFILL ALL GRASS AREAS WITH A MINIMUM OF 6-INCHES OF TOPSOIL. THIS AREA SHALL IMMEDIATELY BE SEEDED AND MULCHED, AND/OR LANDSCAPED, IF NECESSARY, UPON COMPLETION OF THE WATER, SANITARY AND STORM SEWER SYSTEMS WITH A SEED MIXTURE APPROPRIATE FOR THE TIME OF YEAR.

29. THE CONTRACTOR SHALL PLACE 6-INCHES MINIMUM OF TOPSOIL IN ALL DRAINAGE SWALES. THIS AREA SHALL BE IMMEDIATELY PERMANENTLY SEEDED AND LINED IN ACCORDANCE WITH THESE PLANS.

30. TOPSOIL FILL SHALL BE FREE OF BRICK, BLOCK, CONCRETE WASTE, ROCK, RUBBISH, OR OTHER UNSUITABLE MATERIAL AND SHALL BE MODERATELY COMPACTED WHEN PLACED TO AVOID EXCESSIVE SETTLEMENTS.

31. FURTHER SPECIFICATIONS REGARDING EARTHWORK AND THE CONTROL OF SEDIMENTATION MAY BE REQUIRED. SEE THE STORM WATER POLLUTION PREVENTION PLAN FOR FURTHER DETAILS.

PAVEMENT REMOVED

1. WHERE PLANS REQUIRE PAVEMENT REMOVED, SAWING OF PAVEMENT PRIOR TO PAVEMENT REMOVAL IS INCIDENTAL TO PAVEMENT REMOVED. IF FULL DEPTH PAVEMENT IS NOT ENCOUNTERED, IT IS THE INTENT TO REPLACE WITH FULL DEPTH TO EXISTING EDGE OF FULL DEPTH PAVEMENT.

PAVEMENT MARKINGS

1. ALL PERMANENT TRAFFIC CONTROL MARKINGS AND STRIPING ITEMS INDICATED WITHIN THE PROJECT LIMITS ARE TO PLACED PER THE SPECIFICATIONS OF ODOT STANDARDS UNLESS NOTED OTHERWISE.

IBI GROUP
8101 North High Street
Suite 100
Columbus, OH 43235
tel 614 818 4900
fax 614 818 4901
Contact: Eric Chenevey Ext: 2041
ibigroup.com

REVISION:

SUBMISSION:

- ☐ PRELIMINARY ENGINEERING SET
- ■ AGENCY REVIEW SET
- ☐ CONSTRUCTION DOCUMENT SET
- ☐ AS-BUILT DOCUMENT SET

STAMP:

STATE OF OHIO
ERIC P. CHENEVEY
E-55806
REGISTERED PROFESSIONAL ENGINEER

WARREN COUNTY, OH 45066

RIVER VALLEY CREDIT UNION

25 WEST CENTRAL AVENUE, SPRNIGBORO

DESIGN	DRAFT	CHECK
WTC	MA	EPC

IBI NO.: 141829

DATE: JUNE 23, 2023

SCALE:

SHEET TITLE: GENERAL NOTES

SHEET NO.: C002

LEGEND

(1) ITEM 259 – PERMANENT PAVEMENT, TYPE I
(2) ITEM 608 – 4" CONCRETE WALK
(3) ITEM 441 – 1½ " ASPHALT CONCRETE SURFACE COURSE, TYPE 1, (448), PG70-22M
(4) ITEM 407 – TACK COAT, BITUMINOUS (0.08 GAL/SY)
(5) ITEM 254 – 1½ " PAVEMENT PLANING, ASPHALT CONCRETE
(6) ITEM 304 – 6" AGGREGATE BASE
(7) ITEM 204 – SUBGRADE COMPACTION
(8) ITEM 609 – COMBINATION CURB & GUTTER
(9) ITEM 202 – PAVEMENT REMOVED
(10) ITEM 202 – CURB REMOVED
(11) ITEM 605 – 4" PIPE UNDERDRAIN
(12) ITEM 252 – FULL DEPTH PAVEMENT SAWING
(13) ITEM 423 – CRACK SEALING, TYPE I
(14) ITEM 202 – SIDEWALK REMOVED
(15) ITEM 452 – 8" PLAIN PORTLAND CEMENT CONCRETE

(A) EXISTING ASPHALT ON EXISTING AGGREGATE BASE

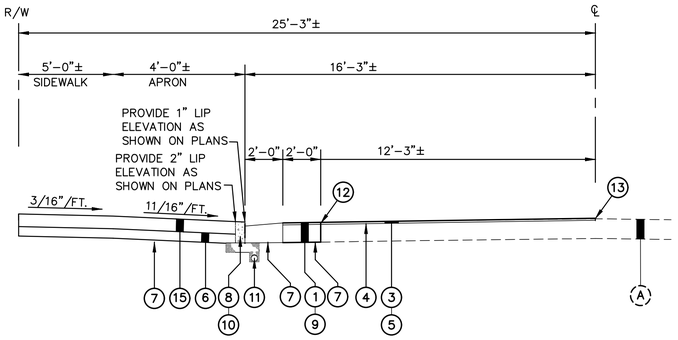

TYPICAL – FLORENCE DRIVE DRIVEWAY IMPROVEMENTS
NOT TO SCALE

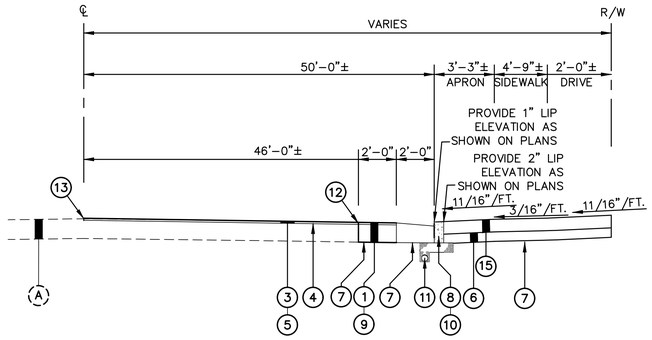

TYPICAL – W. CENTRAL AVE DRIVEWAY IMPROVEMENTS
NOT TO SCALE

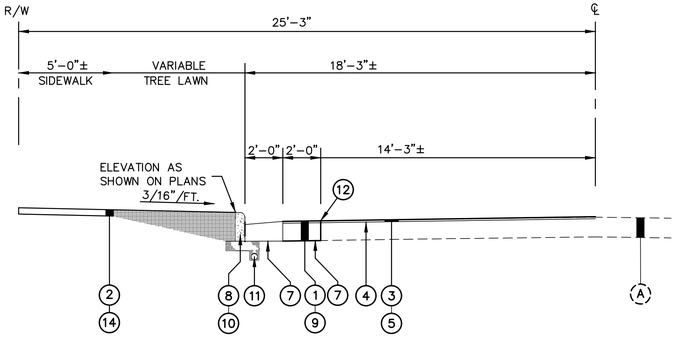

TYPICAL – FLORENCE DRIVE CURB & SIDEWALK IMPROVEMENTS
NOT TO SCALE

IBI GROUP
8101 North High Street
Suite 100
Columbus, OH 43235
tel 614 818 4900
fax 614 818 4901
Contact: Eric Chenevey Ext: 2041
ibigroup.com

REVISION:

SUBMISSION:

- ☐ PRELIMINARY ENGINEERING SET
- ■ AGENCY REVIEW SET
- ☐ CONSTRUCTION DOCUMENT SET
- ☐ AS-BUILT DOCUMENT SET

STAMP:

STATE OF OHIO
ERIC P. CHENEVEY
E-55806
REGISTERED
PROFESSIONAL ENGINEER

WARREN COUNTY, OH 45066

RIVER VALLEY CREDIT UNION

25 WEST CENTRAL AVENUE, SPRNIGBORO

DESIGN	DRAFT	CHECK
WTC	MA	EPC

IBI NO.: 141829

DATE: JUNE 23, 2023

SCALE:

SHEET TITLE: TYPICAL SECTIONS

SHEET NO.: C003

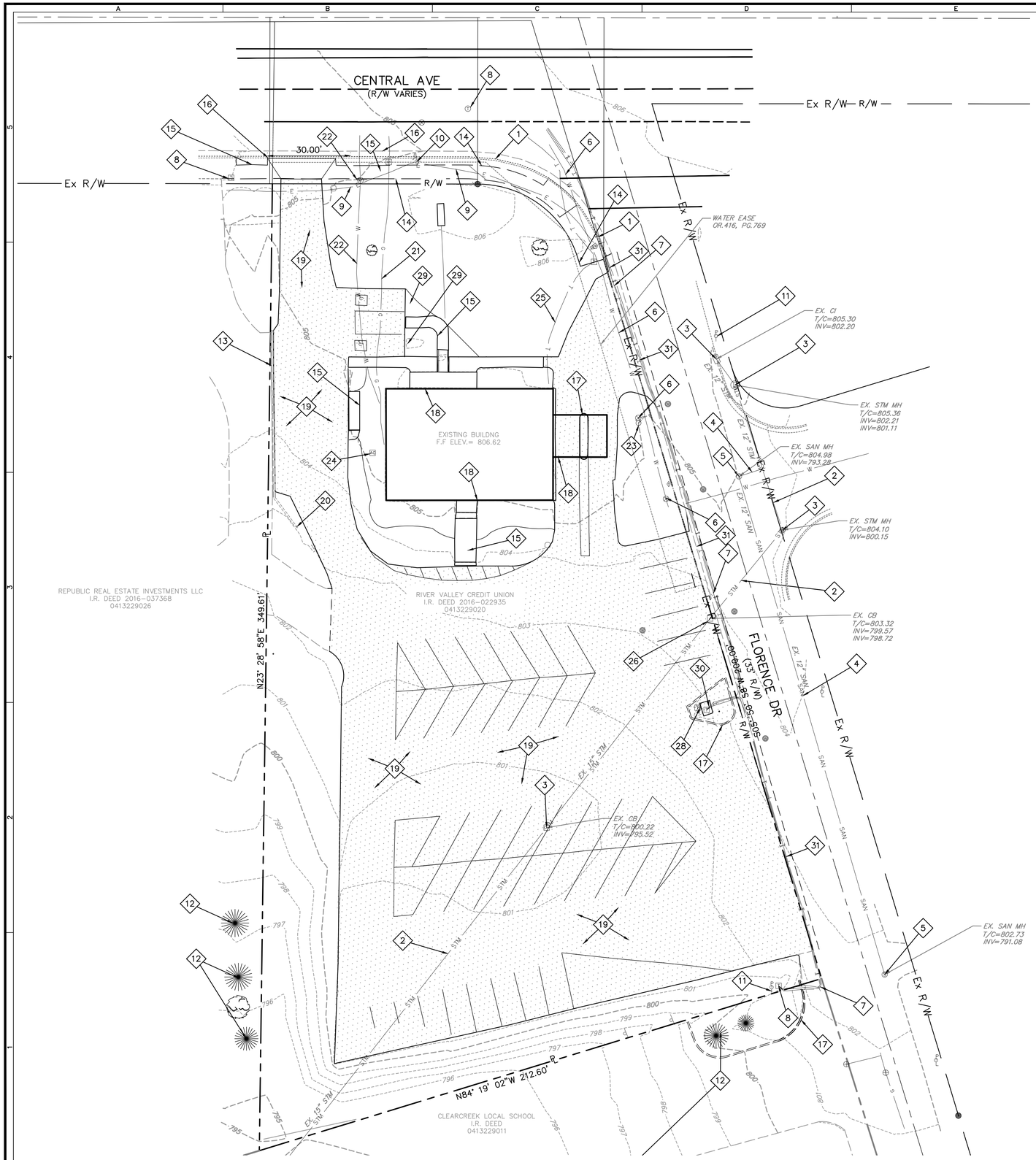

BENCHMARKS

TOPOGRAPHIC, BOUNDARY SURVEY PROVIDED BY IBI GROUP

TWT CP #2	TWT CP #3
CUTS T-2	MAGS T-3
N 571,675.77'	N 571,408.48'
E 1,479,688.24'	E 1,479,589.83'
ELEVATION 805.73'	ELEVATION 801.68'
NAVD83, GEOID 18	NAVD83, GEOID 18

DEMOLITION PLAN LEGEND

SIGN		GAS LINE	—G—
EX. SANITARY LINE	—SAN—	WATER LINE	—W—
EX. STORM SEWER LINE	—STM—	GAS METER	G
FIRE HYDRANT		IRON PIN FOUND (AS NOTED)	
WATER VALVE		UNDERGROUND ELECTRIC LINE	—E—
WATER METER	W	UNDERGROUND COMMUNICATION LINE	—T—
UTILITY BOX		OVERHEAD POWER LINE	—OHL—
LIGHT POLE		UNDERGROUND FIBER OPTIC LINE	—FO—
COMMUNICATION BOX	T	EX. PLASTIC FENCE	— X —
MAIL BOX	M	PROPERTY LINE	
SANITARY MANHOLE	S	EXISTING PAVEMENT TO BE REMOVED	
SANITARY CLEANOUT		PROPOSED FULL-DEPTH SAWCUT LOCATION	
BENCHMARK			

DEMOLITION PLAN NOTES

1. EXISTING UTILITY LOCATIONS ARE APPROXIMATE. THE CONTRACTOR IS TO DETERMINE AND FIELD VERIFY ALL HORIZONTAL AND VERTICAL LOCATIONS PRIOR TO COMMENCEMENT OF CONSTRUCTION.
2. THE CONTRACTOR SHALL COORDINATE ALL WORK ASSOCIATED WITH THE REMOVAL, RELOCATION, AND DEMOLITION OF EXISTING UTILITIES WITH THE RESPECTIVE UTILITY COMPANY.
3. ALL DEMOLISHED MATERIAL TO BECOME THE PROPERTY OF THE CONTRACTOR UNLESS OTHERWISE NOTED, AND SHALL BE LEGALLY DISPOSED OF OFF-SITE. EXCEPT AS NOTED.
4. CONTRACTOR SHALL INSTALL EROSION CONTROL MEASURES PER SHEET C502 PRIOR TO COMMENCING DEMOLITION.
5. MAINTAIN PROPER DRAINAGE IN DEMOLITION AREAS. REMOVE AND REINSTALL.
6. SAW CUT EXISTING CONCRETE AND ASPHALT SURFACES FOR REMOVAL AS NOTED.
7. THE CONTRACTOR SHALL BE RESPONSIBLE FOR REPAIRING DAMAGE TO EXISTING BUILDINGS AND/OR SITE ENTITIES THAT ARE TO REMAIN.
8. THE CONCRETE PROPOSED TO BE SAWCUT SHALL BE SAWCUT TO THE NEAREST CONCRETE JOINT BEYOND THE LIMITS ILLUSTRATED. NOTIFY ENGINEER IF JOINT IS OVER ONE (1) FOOT FROM LINE SHOWN.
9. ANY DISCREPANCIES OR CONFLICTS WHICH BECOME APPARENT BEFORE OR DURING CONSTRUCTION SHALL BE BROUGHT TO THE ATTENTION OF THE ENGINEER IMMEDIATELY SO THAT CLARIFICATION OR REDESIGN MAY OCCUR.

DEMOLITION KEYNOTE LEGEND

1. EXISTING CONCRETE CURB AND GUTTER TO REMAIN
2. EXISTING STORM SEWER TO REMAIN
3. EXISTING STORM STRUCTURE TO REMAIN
4. EXISTING SANITARY SEWER TO REMAIN
5. EXISTING SANITARY STRUCTURE TO REMAIN
6. EXISTING WATER MAIN AND VALVES TO REMAIN
7. EXISTING COMMUNICATIONS LINE TO REMAIN
8. EXISTING COMMUNICATIONS STRUCTURE TO REMAIN
9. EXISTING ELECTRIC LINE TO REMAIN
10. EXISTING LIGHT POLE TO REMAIN
11. EXISTING UTILITY POLE TO REMAIN
12. EXISTING TREE TO REMAIN
13. EXISTING WALL TO REMAIN
14. EXISTING SIDEWALK TO REMAIN
15. EXISTING SIDEWALK TO BE REMOVED OUT AT NEAREST JOINT.
16. EXISTING CURB & GUTTER TO BE REMOVED OUT AT NEAREST JOINT.
17. EXISTING CONCRETE CURB TO BE REMOVED
18. EXISTING BUILDING & STRUCTURE TO BE REMOVED
19. EXISTING ASPHALT PAVEMENT TO BE REMOVED
20. EXISTING WALL TO BE REMOVED
21. EXISTING GAS TO BE REMOVED & CAPPED AT ROW
22. EXISTING WATER SERVICE TO BE REMOVED & CAPPED AT ROW
23. EXISTING FIRE HYDRANT TO BE REMOVED & RELOCATED
24. EXISTING AC/MECHANICAL UNIT TO BE REMOVED
25. EXISTING COMMUNICATIONS LINE TO BE REMOVED
26. EXISTING STORM STRUCTURE TO BE REMOVED
27. NOT USED
28. EXISTING UTILITY POLE TO BE REMOVED & RELOCATED
29. EXISTING PRIVATE SIGN TO BE REMOVED
30. EXISTING COMMUNICATION STRUCTURE TO BE REMOVED & RELOCATED
31. EXISTING COMMUNICATION/FIBER LINE TO BE RELOCATED/LOWERED.

GRAPHIC SCALE
20 10 0 20
(IN FEET)
1 inch = 20 ft.

IBI GROUP
8101 North High Street
Suite 100
Columbus, OH 43235
tel 614 818 4900
fax 614 818 4901
Contact: Eric Chenevey Ext: 2041
ibigroup.com

REVISION:

SUBMISSION:

- ☐ PRELIMINARY ENGINEERING SET
- ■ AGENCY REVIEW SET
- ☐ CONSTRUCTION DOCUMENT SET
- ☐ AS-BUILT DOCUMENT SET

STAMP:

STATE OF OHIO
ERIC P. CHENEVEY
E-55806
REGISTERED
PROFESSIONAL ENGINEER

WARREN COUNTY, OH 45066

RIVER VALLEY CREDIT UNION

25 WEST CENTRAL AVENUE, SPRNIGBORO

DESIGN	DRAFT	CHECK
WTC	MA	EPC

IBI NO.: 141829

DATE: JUNE 23, 2023

SCALE:

SHEET TITLE: DEMOLITION PLAN

SHEET NO.: C101

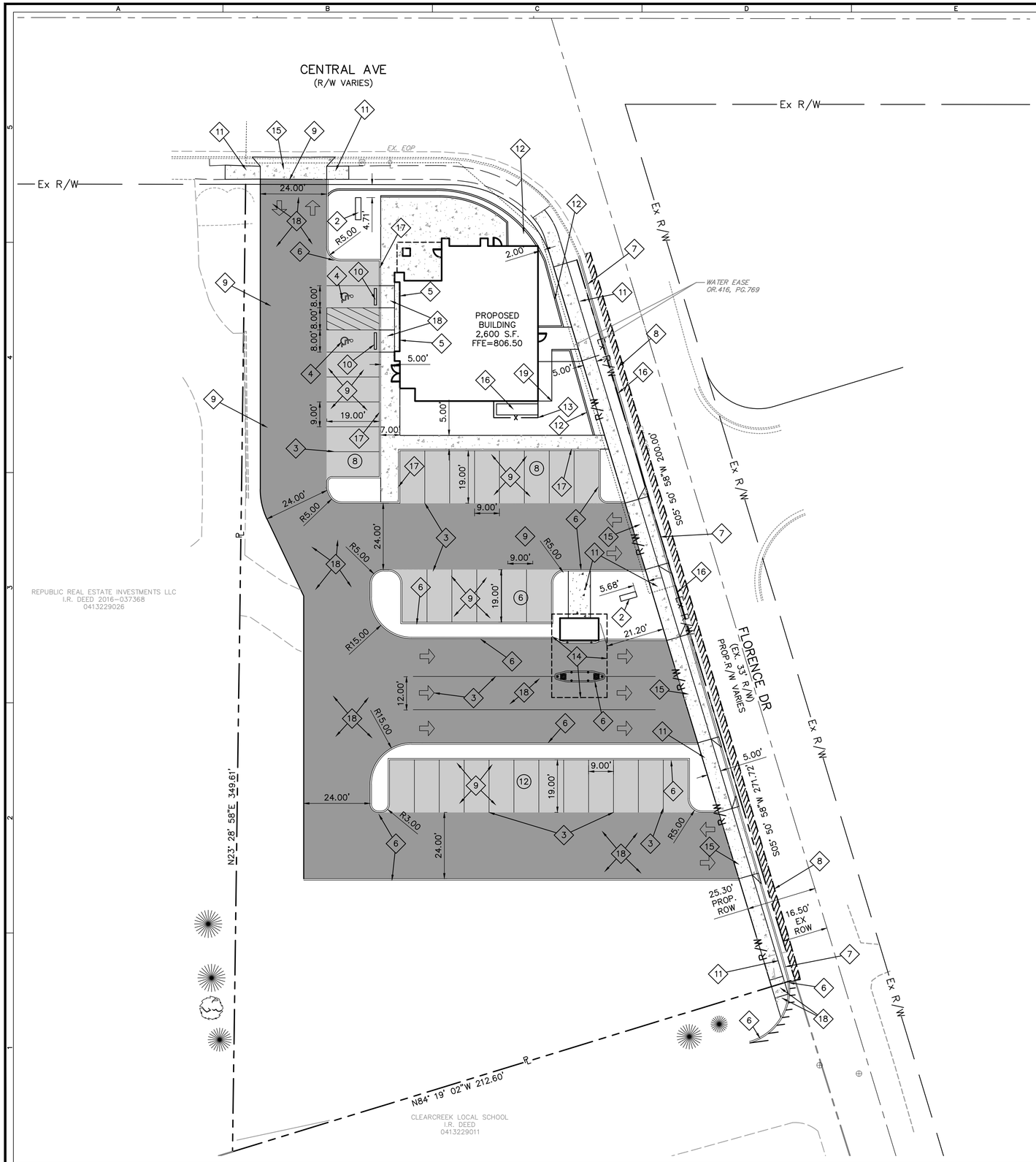

SITE PLAN LEGEND

- BOUNDARY LINE
- SETBACK LIMITS
- RIGHT-OF-WAY (Ex R/W)
- PROPOSED FULL-DEPTH SAWCUT LOCATION
- EXISTING TREE LINE
- (6) PARKING COUNT
- PROPOSED LIGHT DUTY ASPHALT PAVEMENT
- PROPOSED HEAVY DUTY ASPHALT PAVEMENT
- PROPOSED CONCRETE
- PROPOSED FULL DEPTH PAVEMENT

SITE DATA

ADDRESS: 25 W CENTRAL AVENUE SPRINGBORO, OH 45066

PARCEL #: 04132290200

EXISTING SITE AREA: 1.17 AC.±
PROPOSED SITE AREA: 1.12 AC.±
ROW DEDICATION AREA: 0.05 AC.±

ZONING: UVD – URBAN VILLAGE DISTRICT

EXISTING USE: CREDIT UNION
PROPOSED USE: CREDIT UNION

IMPERVIOUS AREA: EXISTING = 0.793 AC.±
PROPOSED = 0.648 AC.±

NET REDUCTION IN IMPERVIOUS AREA = 0.145 AC.±

BUILDING AREA: 2,600 S.F.

SETBACKS: REAR – 0'
FRONT – 0'
SIDE – 0'

PARKING: COMMERCIAL, OFFICE AND SERVICE USES (DEFAULT)

REQUIRED MINIMUM STANDARD SPACES:

1 SPACE / 275 S.F BUILDING = 10 SPACES

PROPOSED PARKING:

STANDARD SPACES = 32
ADA SPACES = 2
TOTAL SPACES = 34

SITE WORK GENERAL NOTES AND SPECIFICATIONS

1. THE CONTRACTOR SHALL BE RESPONSIBLE FOR OBTAINING OR VERIFYING THAT ALL PERMITS AND APPROVALS ARE OBTAINED FROM THE RESPECTIVE TOWNSHIP, CITY/TOWN, COUNTY, AND STATE AGENCIES PRIOR TO STARTING CONSTRUCTION.
2. IT SHALL BE THE CONTRACTORS RESPONSIBILITY TO DETERMINE THE EXACT LOCATION OF ALL EXISTING UTILITIES IN THE VICINITY OF THE CONSTRUCTION AREA PRIOR TO STARTING CONSTRUCTION.
3. IT SHALL BE THE CONTRACTORS RESPONSIBILITY FOR NOTIFICATION AND COORDINATION OF ALL CONSTRUCTION WITHIN THE RESPECTIVE UTILITY COMPANIES.
4. IT SHALL BE THE RESPONSIBILITY OF THE DEVELOPER AND CONTRACTOR TO MAINTAIN QUALITY CONTROL THROUGHOUT THE PROJECT; FAILURE TO DO SO MAY RESULT IN REMOVAL AND REPLACEMENT OF THE DEFECTIVE WORK. IT IS RECOMMENDED THAT THE DEVELOPER HAVE A QUALIFIED INSPECTOR ON THE JOB SITE AT ALL TIMES DURING CONSTRUCTION.
5. IT IS ESSENTIAL THAT THE WORK TO BE DONE IN CONJUNCTION WITH THIS PROJECT SHALL BE INSTALLED ACCORDING TO THESE SPECIFICATIONS. THE ENGINEER WILL BE REQUIRED TO CERTIFY TO CERTAIN PORTIONS OF THIS PROJECT UPON COMPLETION . THEREFORE IT IS NECESSARY TO OBTAIN APPROVAL AND ACCEPTANCE BY THE CITY THAT CONSTRUCTION WAS DONE IN COMPLIANCE WITH THESE PLANS AND SPECIFICATIONS.
6. ALL QUANTITIES GIVEN ON THE PRINTS, VERBALLY, OR IN THE SCOPE OF WORK SECTION ARE ESTIMATES AND SHALL BE CONFIRMED BY THE BIDDING CONTRACTOR.
7. EXCAVATIONS EXCEEDING TWENTY (20) FEET IN DEPTH REQUIRE THE DESIGN OF A TRENCH SAFETY SYSTEM BY A REGISTERED PROFESSIONAL ENGINEER.

SITE KEYNOTE LEGEND

1. PROPOSED CONCRETE TRANSFORMER PAD
2. PROPOSED MONUMENT SIGN
3. PROPOSED PARKING STALL STRIPING
4. PROPOSED ADA PARKING STALLS, SEE DETAILS ON SHEET C202
5. PROPOSED ADA PARKING SIGN. SEE DETAIL SHEET C202
6. PROPOSED CONCRETE STRAIGHT CURB. SEE DETAIL SHEET C202
7. PROPOSED CURB & GUTTER, SEE DETAILS SHEET C202
8. PROPOSED ASPHALT PAVEMENT. BUILDUP TO MATCH MATERIAL & DEPTH OF FLORENCE DRIVE.
9. PROPOSED LIGHT DUTY ASPHALT
10. PROPOSED CONCRETE WHEEL STOP (TYP.) SEE DETAIL SHEET C202
11. PROPOSED SIDEWALK.
12. PROPOSED LANDSCAPE BED.
13. PROPOSED SCREENING WALL. SEE ARCHITECTURAL PLAN FOR MORE INFORMATION
14. PROPOSED ATM DRIVE-THRU & CANOPY.
15. PROPOSED CONCRETE DRIVE APRON.
16. PROPOSED MECHANICAL UNITS AND CONCRETE PAD. SEE MEP PLANS FOR MORE INFORMATION
17. PROPOSED INTEGRAL CURB AND WALK. SEE DETAIL SHEET C202
18. PROPOSED ADA CURB RAMP.
19. PROPOSED HEAVY DUTY ASPHALT. SEE DETAIL SHEET C202
19. PROPOSED CONCRETE REFUSE BIN PAD. (REFER TO LANDSCAPE PLANS FOR SCREENING)

GRAPHIC SCALE
20 10 0 20
(IN FEET)
1 inch = 20 ft.

IBI GROUP
8101 North High Street
Suite 100
Columbus, OH 43235
tel 614 818 4900
fax 614 818 4901
Contact: Eric Chenevey Ext: 2041
ibigroup.com

REVISION:

SUBMISSION:

- ☐ PRELIMINARY ENGINEERING SET
- ■ AGENCY REVIEW SET
- ☐ CONSTRUCTION DOCUMENT SET
- ☐ AS-BUILT DOCUMENT SET

STAMP:

STATE OF OHIO
ERIC P. CHENEVEY
E-55806
REGISTERED
PROFESSIONAL ENGINEER

WARREN COUNTY, OH 45066

RIVER VALLEY CREDIT UNION

25 WEST CENTRAL AVENUE, SPRNIGBORO

DESIGN	DRAFT	CHECK
WTC	MA	EPC

IBI NO.: 141829

DATE: JUNE 23, 2023

SCALE:

SHEET TITLE: SITE DIMENSION PLAN

SHEET NO.: C200

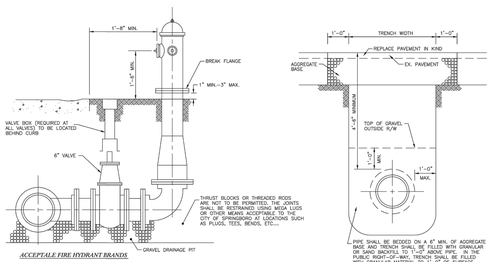

ACCEPTALE FIRE HYDRANT BRANDS

1. AMERICAN DARLING MODEL B-62-B WITH 5" STORZ CONNECTION ON THE STEAMER

FIRE HYDRANT DETAILS		*FIRE HYDRANT DETAILS CONT.*	
1. DIA. – MAIN VALVE OPENING	5. 1/4"	8. COLOR TO BE PAINTED	BARREL – SAFETY RED
2. DIA. – PUMPER CONNECTION	I.D. 4 1/2" O.D. 5 3/4"		BONNET – SAFETY RED
3. DIA. – HOSE CONNECTIONS	TWO 2 1/2"	9. VALVE SEAT	MACHINED BRONZE
4. THREAD TYPE	NATIONAL STANDARD – NO	10. BARREL	TWO PIECE WITH BREAK AWAY FEATURE
	PENTAGON – ADDED TO WATER	11. STEM	NUT
5. SHAPE – CAPS & OPERATING NUT	PENTAGON	12. BEARING	ANTI-FRICTION THRUST BEARING
6. DIMENSIONS – OPERATING NUT –	1 1/2"		
7. DIRECTION OF OPENING	COUNTER CLOCKWISE		

FIRE HYDRANT AND WATER TRENCH EXCAVATION

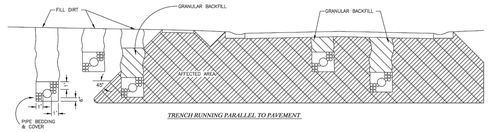

TRENCH RUNNING PARALLEL TO PAVEMENT

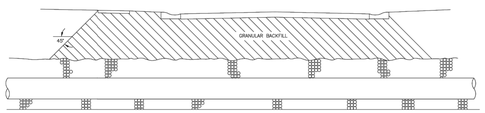

TRENCH CROSSING PAVEMENT

1. EXAMPLES ONLY, TO SHOW EXTENT OF BACKFILL IN VICINITY OF PAVEMENTS.
2. PIPE BEDDING SHALL BE #6 GRAVEL, TORPEDO FILL, OR PIPE FILL (SAND).
3. GRANULAR BACKFILL (ODOT ITEM 703, #57 COARSE AGGREGATE) TO BE COMPACTED IN 6" LAYERS WITH MECHANICAL TAMPER.
4. THIS STANDARD APPLIES TO ALL UTILITY TRENCHES.

GRANULAR BACKFILL REQUIREMENTS

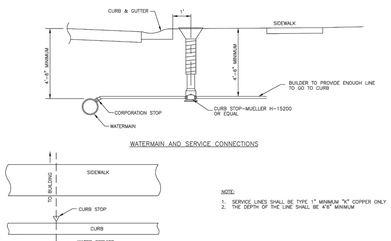

WATERMAIN AND SERVICE CONNECTIONS

PLAN

NOTE:
1. SERVICE LINES SHALL BE TYPE 1" MINIMUM "K" COPPER ONLY
2. THE DEPTH OF THE LINE SHALL BE 4'6" MINIMUM

WATERMAIN AND SERVICE CONNECTIONS

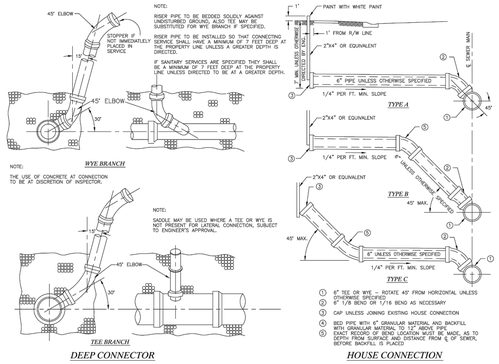

DEEP CONNECTOR AND HOUSE CONNECTION

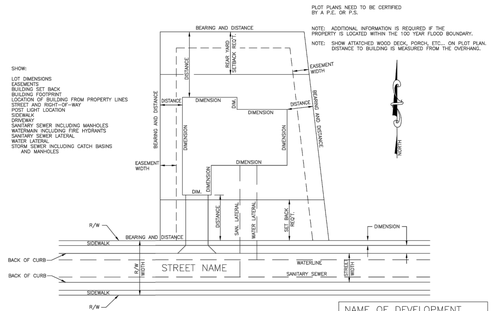

PLOT PLAN REQUIREMENTS

SINGLE FAMILY RESIDENTIAL

NAME OF DEVELOPMENT
ADDRESS
LOT NUMBER
BUILDER & PHONE NUMBER
SCALE (1"=40' MIN.)

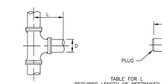

TABLE FOR L:
REQUIRED LENGTH OF RESTRAINED JOINTS
D – DIAMETER OF PIPE

D	4"	6"	8"	10"	12"	14"	16"	18"	20"	24"
L	11	12	26	38	48	58	68	78	88	143

REQUIRED RESTRAINED JOINTS FOR DEAD END VALVES, PLUGS, CAPS & TEES

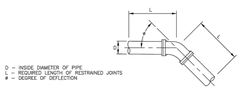

D – INSIDE DIAMETER OF PIPE
L – REQUIRED LENGTH OF RESTRAINED JOINTS
– DEGREE OF DEFLECTION

TABLE FOR L:
REQUIRED LENGTH OF RESTRAINED JOINTS
D – DIAMETER OF PIPE

DEGREE OF #	D	4"	6"	8"	10"	12"	14"	16"	18"	20"	24"
	11 1/4°	*	*	1	1	1	1	2	2	2	3
	22 1/2°	*	*	2	3	3	4	5	6	7	11
	45°	*	4	8	12	15	19	23	30	34	45
	90°	11	26	38	48	58	68	78	88	253	45

* REQUIRED RESTRAINED JOINT AT FITTING ONLY

REQUIRED RESTRAINED JOINTS FOR BENDS

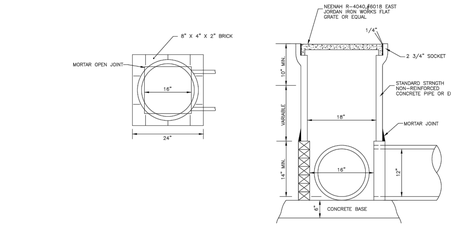

SPRINGBORO TYPE 7 CATCH BASIN

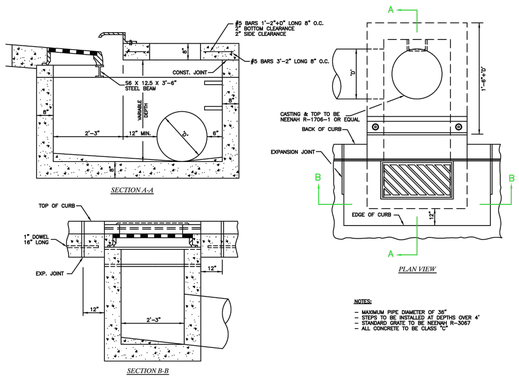

NOTES:
– MAXIMUM PIPE DIAMETER OF 36"
– STEPS TO BE INSTALLED AT DEPTHS OVER 4'
– STANDARD GRATE TO BE NEENAH R-3067
– ALL CONCRETE TO BE CLASS "C"

CB-3A MODIFIED CATCH BASIN

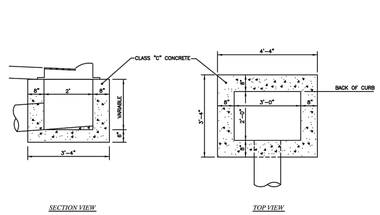

1. CURB INLET FRAME, GRATE AND CURB BOX TO BE "NEENAH TYPE R-3067" OR EQUAL. FISH LOGO TO BE PRINTED ON ALL CASTINGS AS SHOWN ON STANDARD DRAWING.
2. BRICK OR CONCRETE BLOCK SIDE WALLS, WHEN USED IN PLACE OF CONCRETE, SHALL BE LAID IN MORTAR.
3. PRECAST CONSTRUCTION IS PERMITTED EXCEPT FOR APRON AND CONCRETE SHALL MEET REQUIREMENTS OF 706.13 WITH 6± 2% AIR VOID CONTENT IN THE HARDENED CONCRETE. PRECAST WALLS SHALL HAVE A MINIMUM THICKNESS OF 8" AND REINFORCING SHALL BE SUFFICIENT TO PERMIT SHIPPING AND PLACEMENT WITHOUT DAMAGE.
4. BACKFILL TO BE COMPACTED AS SPECIFIED.
5. STEPS TO BE INSTALLED AT DEPTHS OVER 4'

SPRINGBORO STANDARD CATCH BASIN

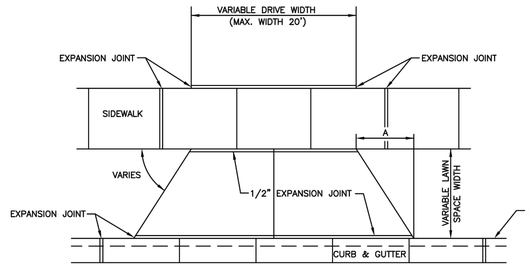

STANDARD DRIVE APPROACH

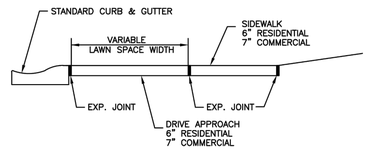

"A" – EQUAL TO LAWN SPACE WIDTH OR 5 FT. (WHICHEVER IS LESS)

TRANSITION FROM STANDARD CURB SECTION TO DROP CURB SECTION TO BE MADE IN 18" DISTANCE FROM DRIVEWAY.

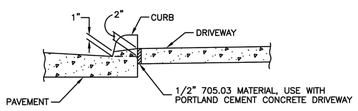

DROP CURB DETAILS AT DRIVEWAYS

GENERAL NOTES

1. DRIVE APPROACHES SHALL NOT BE POURED MONOLITHICLY WITH CURB & GUTTER.
2. MAXIMUM JOINT SPACING SHALL BE 10' LONGITUDINALLY AND TRANSVERSELY.
3. COMPACTED GRAVEL MAY BE USED FOR LEVELING COURSE UNDER CONCRETE DRIVE APPROACH.
4. WHERE ASPHALTIC CONCRETE PAVEMENT IS DISTURBED, THE ASPHALT SHALL BE REPLACED AS DIRECTED BY THE ENGINEER.
5. WHERE SIDEWALK EXISTS PRIOR TO CONSTRUCTION OF DRIVE APPROACH, THE REPLACEMENT OF THE SIDEWALK IS NECESSARY FOR PROPER DEPTH.
6. ANY VARIATION FROM THE ABOVE STANDARD MUST BE APPROVED BY THE ENGINEER.
7. ALL CONCRETE FOR CURB AND GUTTER, SIDEWALK, AND DRIVE APPROACH SHALL MEET THE REQUIREMENTS SET FORTH IN ITEM 608 (ODOT SPECS.) CONCRETE SHALL BE CLASS C.
8. EXPANSION MATERIAL TO BE PROFLEX VINYL EXPANSION MATERIAL AND SHALL MEET ASTM D–1752 SECTION FIVE OR AASHTO M153–98 SPECIFICATION.

RESIDENTIAL AND COMMERCIAL DRIVEWAY APPROACHES

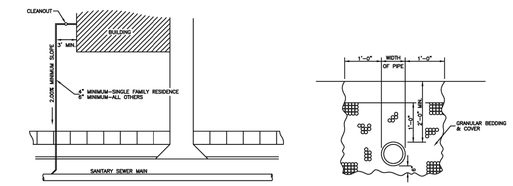

SECTION VIEW

1. BUILDING SEWERS SHALL NOT BE CONSTRUCTED CLOSER THAN 3 FEET TO ANY EXTERIOR WALL, CELLAR, BASEMENT, OR CISTERN, NOR SHALL ANY FOOTING BE LOWER THAN SEWER.
2. ALL EXCAVATIONS SHALL BE BY OPEN CUT. ALL SEWERS WITH THE TRENCH CUT TWO INCHES BELOW GRADE AND REFILLED WITH PEA GRAVEL, PIPE FILL, OR TORPEDO FILL TO THE PROPER GRADE.
3. THE WIDTH OF THE TRENCH AT THE TOP OF THE PIPE SHALL NOT EXCEED 24 INCHES PLUS THE OUTSIDE DIAMETER OF THE PIPE.
4. THE MINIMUM SEWER SLOPE SHALL BE 2.00%
5. PIPE SIZE SHALL NOT BE LESS THAN FOUR INCHES FOR ALL OTHER BUILDINGS.
6. THE FOLLOWING IS A LIST OF APPROVED PIPES:
   – VITRIFIED CLAY PIPE – WITH "O" RING GASKET
   – A.B.S. PIPE – SDR–35 – WITH CHEMICAL WELD
   – A.B.S. PIPE – SDR–26 – WITH CHEMICAL WELD
   – A.B.S. PIPE – SCHEDULE 40 – WITH CHEMICAL WELD
7. ALL PIPING, FLEXIBLE COUPLINGS, DONUTS, ETC., ARE SUBJECT TO THE APPROVAL OF THE INSPECTOR.
8. ALL CHANGES IN DIRECTION OF GRADE ARE TO BE MADE USING TAIL PROPER BLOCKS OR CURVE PIPE.
9. ALL SEWERS EXCEEDING 100 FEET IN LENGTH MUST HAVE A CLEAN–OUT EVERY 100 FEET.
10. ANY VARIATION FROM THIS STANDARD MUST HAVE PRIOR APPROVAL OF THE CITY ENGINEER.

BUILDING SEWERS

SILT FENCE SPECIFICATIONS

1. SILT FENCE SHALL BE CONSTRUCTED BEFORE UPSLOPE LAND DISTURBANCE BEGINS.
2. ALL SILT FENCE SHALL BE PLACED AS CLOSE TO THE CONTOUR AS POSSIBLE SO THAT SMALL AREAS ABOVE THE FENCE MAY DRAIN TO IT AND RUNOFF WILL NOT RUN SMALL SWALES OR DEPRESSIONS WHICH MAY CARRY SMALL CONCENTRATED FLOWS TO THE SILT FENCE ARE DISSIPATED ALONG ITS LENGTH.
3. TO PREVENT WATER PONDED BY THE SILT FENCE FROM FLOWING AROUND THE ENDS, EACH END SHALL BE CONSTRUCTED UPSLOPE SO THAT THE ENDS ARE AT A HIGHER ELEVATION.
4. WHERE POSSIBLE, SILT FENCE SHALL BE PLACED ON THE FLATTEST AREA AVAILABLE.
5. WHERE POSSIBLE, VEGETATION SHALL BE PRESERVED FOR 5 FT. (OR AS MUCH AS POSSIBLE) UPSLOPE FROM THE SILT FENCE. AS SEDIMENT IS REMOVED, IT SHALL BE REDISTRIBUTED WITHIN IT DOES FORM THE INSTALLATION OF THE SILT FENCE.
6. THE HEIGHT OF THE SILT FENCE SHALL BE A MINIMUM OF 16 IN. ABOVE THE ORIGINAL GROUND SURFACE.
7. THE SILT FENCE SHALL BE PLACED IN A TRENCH CUT A MINIMUM OF 6 IN. DEEP. THE TRENCH SHALL BE CUT WITH A TRENCHER, CABLE LAYING MACHINE, OR OTHER SUITABLE DEVICE WHICH WILL ENSURE AN ADEQUATELY UNIFORM TRENCH DEPTH.
8. THE SILT FENCE SHALL BE PLACED WITH THE STAKES ON THE DOWNSLOPE SIDE OF THE GEOTEXTILE AND SO THAT 8 IN. OF CLOTH ARE BELOW THE GROUND SURFACE. EXCESS MATERIAL SHALL LAY ON THE BOTTOM OF THE 6–IN.–DEEP TRENCH. THE TRENCH SHALL BE BACKFILLED AND COMPACTED.
9. SEAMS BETWEEN SECTION OF SILT FENCE SHALL BE OVERLAPPED WITH THE END STAKES OF EACH SECTION WRAPPED TOGETHER BEFORE DRIVING INTO THE GROUND.
10. MAINTENANCE—SILT FENCE SHALL ALLOW RUNOFF TO PASS ONLY AS DIFFUSE FLOW THOUGH THE GEOTEXTILE. IF RUNOFF OVERTOPS THE SILT FENCE, OR IN ANY OTHER WAY BECOMES A CONCENTRATED FLOW, ONE OF THE FOLLOWING SHALL BE PERFORMED, AS APPROPRIATE:
   1) THE LAYOUT OF THE SILT FENCE SHALL BE CHANGED
   2) ACCUMULATED SEDIMENT SHALL BE REMOVED
   3) OTHER PRACTICES SHALL BE INSTALLED AS APPROVED BY THE CITY OF SPRINGBORO.

CRITERIA FOR SILT FENCE MATERIALS

1. FENCE POSTS—THE LENGTH SHALL BE A MINIMUM OF 32 IN. LONG. WOOD POSTS WILL BE 2–IN×2–IN. HARDWOOD OF SOUND QUALITY. THE MAXIMUM SPACING BETWEEN POSTS SHALL BE 10 FT.
2. SILT FENCE FABRIC SHALL BE ODOT 712.09 TYPE C GEOTEXTILE FABRIC AS DESCRIBED BY THE CHART BELOW:

FABRIC PROPERTIES	
MINIMUM TENSILE STRENGTH	120 lbs.
MAXIMUM ELONGATION AT 60 LBS.	50 lbs.
MINIMUM MULLEN BURST STRENGTH	240 lbs.
MINIMUM TEAR STRENGTH	40 lbs.
MINIMUM BURST STRENGTH	200 psi
MAXIMUM APPARENT OPENING	0.125" max.
MINIMUM PERMITTIVITY	1.5 (1/s) sec^{-1}
ULTRAVIOLET EXPOSURE STRENGTH RETENTION	70%

POSSIBLE LOCATIONS OF SILT FENCE MATERIAL MAY BE FOUND AT:

SITE SUPPLY INC.
COLUMBUS OFFICE
1500 JAMES PARKWAY
COLUMBUS, OHIO 43223
PH 614–443–4545
FAX 614–443–9966

SITE SUPPLY INC.
CINCINNATI OFFICE
7777 TYLERSVILLE ROAD
LOVELAND, OHIO 45140
PH: 513–248–1498

IBI GROUP
8101 North High Street
Suite 100
Columbus, OH 43235
tel 614 818 4900
fax 614 818 4901
Contact: Eric Chenevey Ext: 2041
ibigroup.com

REVISION:

SUBMISSION:

- ☐ PRELIMINARY ENGINEERING SET
- ■ AGENCY REVIEW SET
- ☐ CONSTRUCTION DOCUMENT SET
- ☐ AS-BUILT DOCUMENT SET

STAMP:

STATE OF OHIO
ERIC P. CHENEVEY
E-55806
REGISTERED
PROFESSIONAL ENGINEER

WARREN COUNTY, OH 45066

RIVER VALLEY CREDIT UNION

25 WEST CENTRAL AVENUE, SPRNIGBORO

DESIGN	DRAFT	CHECK
WTC	MA	EPC

IBI NO.: 141829

DATE: JUNE 23, 2023

SCALE:

SHEET TITLE: SITE DETAILS

SHEET NO.: C201

ACCESSIBLE PARKING SPACES SHALL BE IDENTIFIED BY A SIGN SHOWING THE INTERNATIONAL SYMBOL OF ACCESSIBILITY COMPLYING WITH ANSI 4.28.8. SIGNS SHALL NOT BE OBSCURED BY A VEHICLE PARKED IN THE SPACE. SEE ACCESSIBLE PARKING SIGN DETAIL.

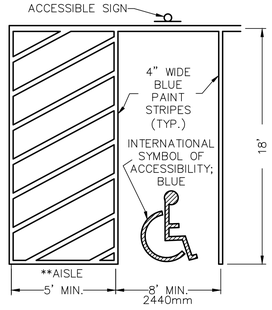

** 5'-0" MIN. AISLE FOR REGULAR SPACE
**8'-0" MIN. AISLE FOR VAN ACCESSIBLE SPACE
SEE SITE PLAN FOR ACTUAL DIMENSIONS

ACCESSIBLE PARKING SPACE
NO SCALE

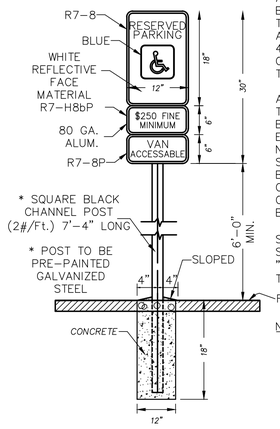

ACCESSIBLE PARKING SPACES SHALL BE IDENTIFIED BY A SIGN SHOWING THE INTERNATIONAL SYMBOL OF ACCESSIBILITY COMPLYING WITH ANSI 4.28.8. SIGNS SHALL NOT BE OBSCURED BY A VEHICLE PARKED IN THE SPACE.

ANSI 4.28.5 FINISH AND CONTRAST THE CHARACTERS, SYMBOLS, AND BACKGROUND OF SIGN SHALL BE EGGSHELL, MATTE, OR OTHER NON-GLARE FINISH. CHARACTERS AND SYMBOLS SHALL CONTRAST WITH THEIR BACKGROUND, WITH EITHER LIGHT CHARACTERS ON A DARK BACKGROUND OR DARK CHARACTERS ON A LIGHT BACKGROUND.

SPACES COMPLYING WITH 4.1.2(5)(B) SHALL HAVE AN ADDITIONAL SIGN "VAN-ACCESSIBLE" MOUNTED BELOW THE SYMBOL OF ACCESSIBILITY.

NOTE:
1. ONE IN EIGHT ACCESSIBLE SPACES SHALL BE VAN ACCESSIBLE, BUT NOT LESS THAN ONE.
2. PARKING SIGN MAY BE PLACED ON PROPOSED BUILDING DIRECTLY IN FRONT OF ACCESSIBLE PARKING STALL AT HEIGHT CONSISTENT WITH DETAIL.

ACCESSIBLE PARKING SIGN
NO SCALE

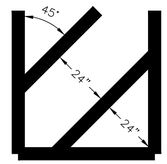

PAINTED ISLANDS

4" SOLID WHITE LINE PAVEMENT MARKINGS
4" SOLID BLUE LINE PAVEMENT MARKINGS FOR ADA ISLANDS



PARKING STRIPING
SOLID WHITE LINE

PARKING STRIPING DETAIL
NO SCALE

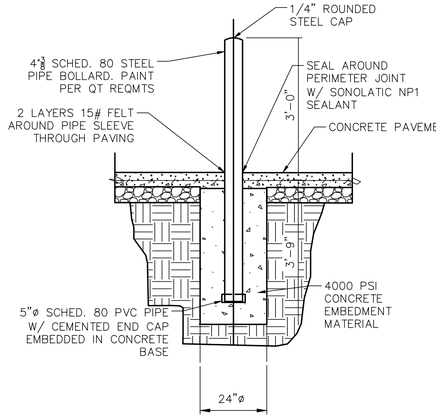

BOLLARD DETAIL
NO SCALE

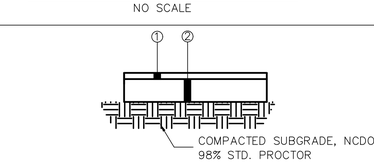

CURB END TRANSITION DETAIL
NO SCALE

①2" ASPHALT SURFACE COURSE, TO BE INSTALLED IN TWO 1" LIFTS
②6" AGGREGATE BASE COURSE

* PAVEMENT SECTIONS SHOWN IS FOR BIDDING PURPOSES ONLY. IBI GROUP MAKES NO WARRANTY OF PAVEMENT PERFORMANCE.

LIGHT DUTY ASPHALT PAVING DETAIL
NO SCALE

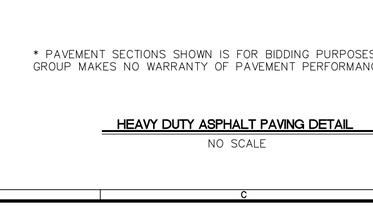

NOTE:
1.) CONTROL JOINTS 5' O.C. MAX.
2.) EXPANSION JOINTS 1/2" @ 50' O.C. MAX.
3.) CONCRETE SHALL BE 4000 PSI AE
4.) 1/8" (1.04%) MIN. TO 1/4" (2.08%) MAX. CROSS SLOPE ON PROPOSED SIDEWALK
5.) MAXIMUM LONGITUDINAL SLOPE ON SIDEWALK IS 5%
6.) CONTRACTOR SHALL COMPLY WITH ALL CURRENT ADA ACCESSIBILITY GUIDELINES FOR CONSTRUCTION OF PROPOSED SIDEWALK

(ON-SITE WALK ONLY)

CONCRETE WALK DETAIL
NOT TO SCALE

NOTES:

1.) CONTROL JOINTS PER LA DRAWINGS
2.) EXPANSION JOINTS 30' O.C. MAX.
3.) CONCRETE SHALL BE 4000 PSI AE
4.) 1/8" (1.04%) MIN. TO 3/16"(1.56%) MAX. CROSS SLOPE ON PROPOSED SIDEWALK
5.) MAXIMUM LONGITUDINAL SLOPE OF SIDEWALK IS 5%
6.) CONTRACTOR SHALL COMPLY WITH ALL CURRENT ADA ACCESSIBILITY GUIDELINES FOR CONSTRUCTION OF PROPOSED SIDEWALK
7.) DOWELS AT EXPANSION JOINTS
8.) CONCRETE SHALL BE SEALED WITH WEATHER WORKER 40% J29 OR ENGINEER APPROVED EQUAL
9.) WHERE RAMPING TO MEET PAVEMENT, TRUNCATED DOMES ARE REQUIRED

INTEGRAL WALK AND CURB
NO SCALE

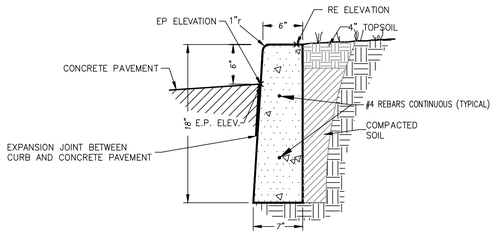

STRAIGHT CURB
NO SCALE

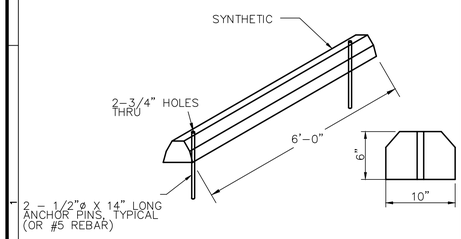

WHEEL STOP DETAIL
NO SCALE

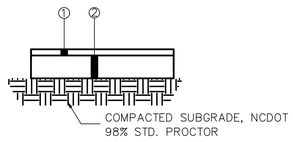

①3" ASPHALT SURFACE COURSE, TO BE INSTALLED IN TWO 1.5" LIFTS
②6" AGGREGATE BASE COURSE

* PAVEMENT SECTIONS SHOWN IS FOR BIDDING PURPOSES ONLY. IBI GROUP MAKES NO WARRANTY OF PAVEMENT PERFORMANCE.

HEAVY DUTY ASPHALT PAVING DETAIL
NO SCALE

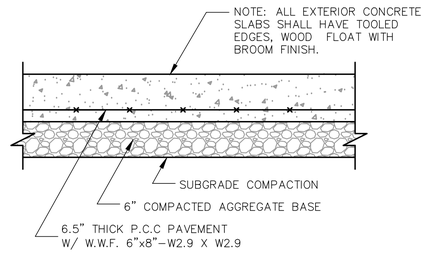

CONCRETE PAVEMENT FOR TRASH ENCLOSURE + LOADING SPACE
NO SCALE

IBI GROUP
8101 North High Street
Suite 100
Columbus, OH 43235
tel 614 818 4900
fax 614 818 4901
Contact: Eric Chenevey Ext: 2041
ibigroup.com

REVISION:

SUBMISSION:

- ☐ PRELIMINARY ENGINEERING SET
- ■ AGENCY REVIEW SET
- ☐ CONSTRUCTION DOCUMENT SET
- ☐ AS-BUILT DOCUMENT SET

STAMP:

STATE OF OHIO
ERIC P. CHENEVEY
E-55806
REGISTERED PROFESSIONAL ENGINEER

WARREN COUNTY, OH 45066

RIVER VALLEY CREDIT UNION

25 WEST CENTRAL AVENUE, SPRNIGBORO

DESIGN	DRAFT	CHECK
WTC	MA	EPC

IBI NO.: 141829

DATE: JUNE 23, 2023

SCALE:

SHEET TITLE:

SITE DETAILS

SHEET NO.: C202

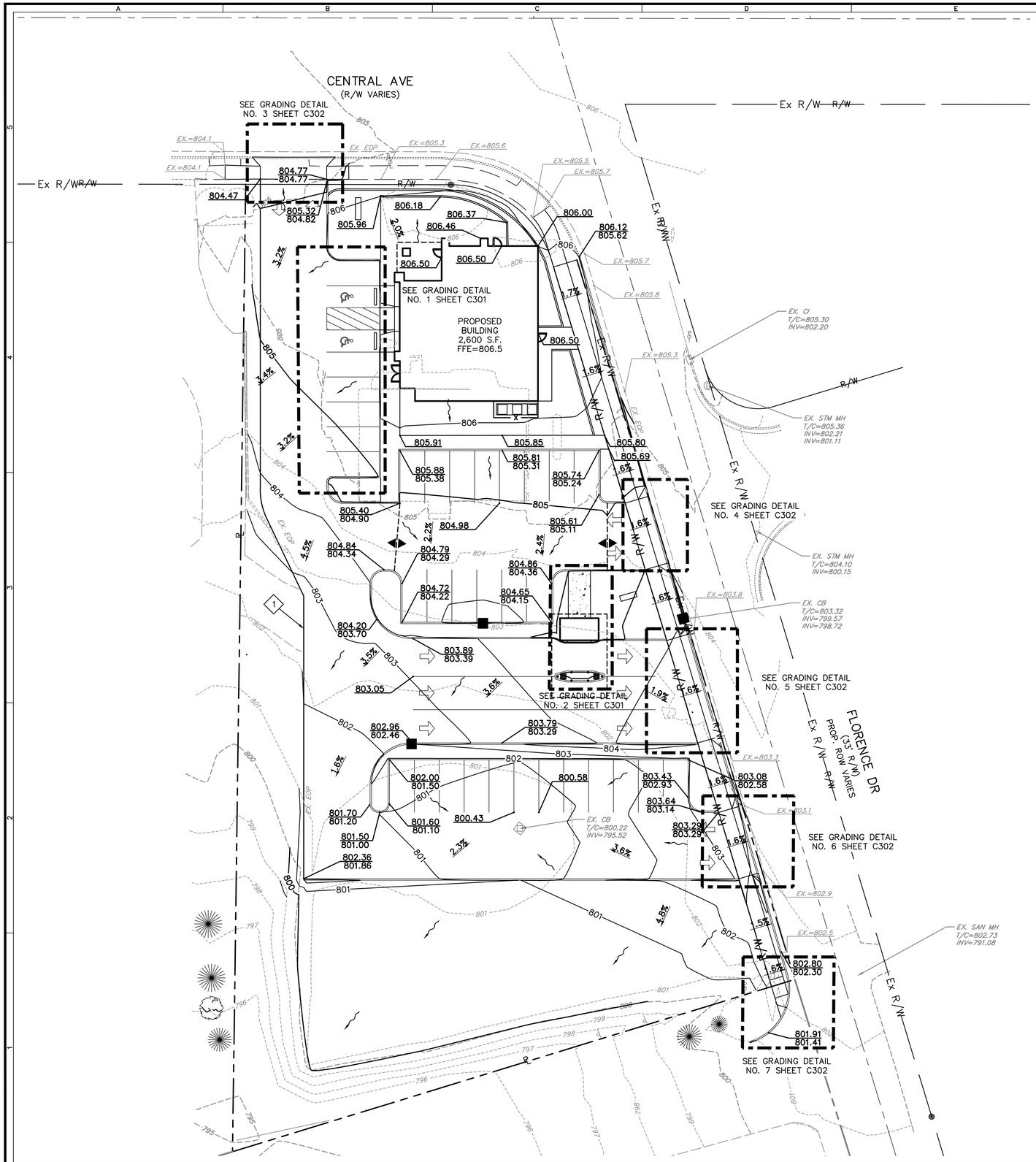

GRADING PLAN LEGEND

PROPOSED 5' CONTOUR	XXX.XX PROPOSED PAVEMENT GRADE
PROPOSED 1' CONTOUR	XXX.XX PROPOSED GROUND GRADE
EXISTING 5' CONTOUR	EX.=XXX.XX MATCH EXISTING GRADE
EXISTING 1' CONTOUR	XXX.XX / XXX.XX PROPOSED TOP OF CURB / PROPOSED EDGE OF PAVEMENT
	GRATE=XXX.XX PROPOSED TOP OF GRATE
	F.F.E.=21.95 FINISHED FLOOR ELEVATION
	XX% PROPOSED SLOPE
	PROPOSED DRAINAGE BOUNDARY
	FGTW = XXX.XX FINISH GRADE TOP OF WALL
	FGBW = XXX.XX FINISH GRADE BOTTOM OF WALL
	MAJOR STORM RUNOFF PATH

GRADING PLAN NOTES

1. INFORMATION CONCERNING SITE SOIL CONDITIONS WILL BE PROVIDED BY THE OWNER.
2. CONTRACTOR SHALL BE RESPONSIBLE FOR REMOVAL OF ALL DEBRIS AS ACCEPTABLE TO THE OWNER AND ENGINEER.
3. IF CONTRACTOR DOES NOT ACCEPT EXISTING TOPOGRAPHY AS SHOWN ON THE PLANS, WITHOUT EXCEPTION, THE CONTRACTOR SHALL HAVE MADE, AT THEIR OWN EXPENSE, A TOPOGRAPHIC SURVEY AND SUBMIT IT TO THE OWNER FOR REVIEW.
4. CONTRACTOR IS RESPONSIBLE FOR NOTIFYING ALL UTILITIES BEFORE CONSTRUCTION AND VERIFYING LOCATION OF ALL UTILITIES SHOWN OR NOT SHOWN.
5. CONTRACTOR SHALL PROVIDE POSITIVE DRAINAGE AWAY FROM THE BUILDINGS.
6. CONTRACTOR SHALL BE RESPONSIBLE FOR COORDINATION AND COST OF THE RELOCATION ALL UTILITIES ALONG THE RIGHT OF WAY AND ON SITE ASSOCIATED WITH THE CONSTRUCTION OF THIS PROJECT, SUCH AS, BUT NOT LIMITED TO SIGNAL POLES, SIGNAL CONTROLS, DRAINAGE STRUCTURES, TRAFFIC SIGNS, UTILITY POLES, GUY WIRES, ETC.
7. THE EARTHWORK FOR ALL BUILDING FOUNDATIONS AND SLABS SHALL BE IN ACCORDANCE WITH ARCHITECTURAL PLANS AND SPECIFICATIONS.
8. CONTRACTOR IS RESPONSIBLE FOR REPAIRS OF DAMAGE TO ANY EXISTING IMPROVEMENTS DURING CONSTRUCTION, SUCH AS, BUT NOT LIMITED TO, DRAINAGE, UTILITIES, PAVEMENT, STRIPING, CURBS, ETC. REPAIRS SHALL BE EQUAL TO OR BETTER THAN EXISTING CONDITIONS.
9. ALL SLOPES AND DISTURBED AREAS NOT COVERED BY BUILDING OR PAVEMENT SHALL BE GRADED SMOOTH AND RECEIVE 4 INCHES OF TOPSOIL. CONTRACTOR TO PROVIDE TOPSOIL IF NOT AVAILABLE ON SITE. THE AREAS SHALL BE SEEDED AND MULCHED, FERTILIZED AND WATERED TO PROVIDE A HEARTY MOWABLE STAND OF GRASS. SMALL ROCKS MUST BE REMOVED. ANY AREAS DISTURBED FOR ANY REASON PRIOR TO FINAL ACCEPTANCE OF THE PROJECT SHALL BE CORRECTED BY THE CONTRACTOR AT NO ADDITIONAL COST TO THE OWNER.
10. SPOIL FROM FOOTING IS THE SITE CONTRACTOR'S RESPONSIBILITY. CONTRACTOR IS TO USE THE SOIL ON SITE OR REMOVE IT FROM SITE.
11. ALL SPOT ELEVATIONS ARE TOP OF PAVEMENT UNLESS OTHERWISE NOTED.
12. MAXIMUM SLOPE IN HANDICAP ACCESSIBLE AREAS SHALL COMPLY WITH ADA REQUIREMENTS AND SHALL NOT EXCEED 2.0% IN ANY DIRECTION IN PAVED AREAS AND ALONG THE ACCESSIBLE ROUTE
13. GRADING PLAN ASSUMES SIDEWALK IS FLUSH WITH FINISH FLOOR. IF ARCHITECTURALS CALL FOR A BRICK VENEER SHELF CONTRACTOR TO FIELD ADJUST SIDEWALK AND INTEGRAL CURB SIDEWALK ELEVATIONS AT DOOR THRESHOLDS AND SHELF TO MEET PROPOSED GRADES.

SITE KEYNOTE LEGEND

1. PROPOSED PAVEMENT GRADE TO MATCH EXISTING DRIVE.

GRAPHIC SCALE
20 10 0 20
(IN FEET)
1 inch = 20 ft.

IBI GROUP
8101 North High Street
Suite 100
Columbus, OH 43235
tel 614 818 4900
fax 614 818 4901
Contact: Eric Chenevey Ext: 2041
ibigroup.com

REVISION:

SUBMISSION:

- ☐ PRELIMINARY ENGINEERING SET
- ■ AGENCY REVIEW SET
- ☐ CONSTRUCTION DOCUMENT SET
- ☐ AS-BUILT DOCUMENT SET

STAMP:

STATE OF OHIO
ERIC P. CHENEVEY
E-55806
REGISTERED
PROFESSIONAL ENGINEER

WARREN COUNTY, OH 45066

RIVER VALLEY CREDIT UNION

25 WEST CENTRAL AVENUE, SPRNIGBORO

DESIGN	DRAFT	CHECK
WTC	MA	EPC

IBI NO.: 141829

DATE: JUNE 23, 2023

SCALE:

SHEET TITLE: GRADING PLAN

SHEET NO.: C300

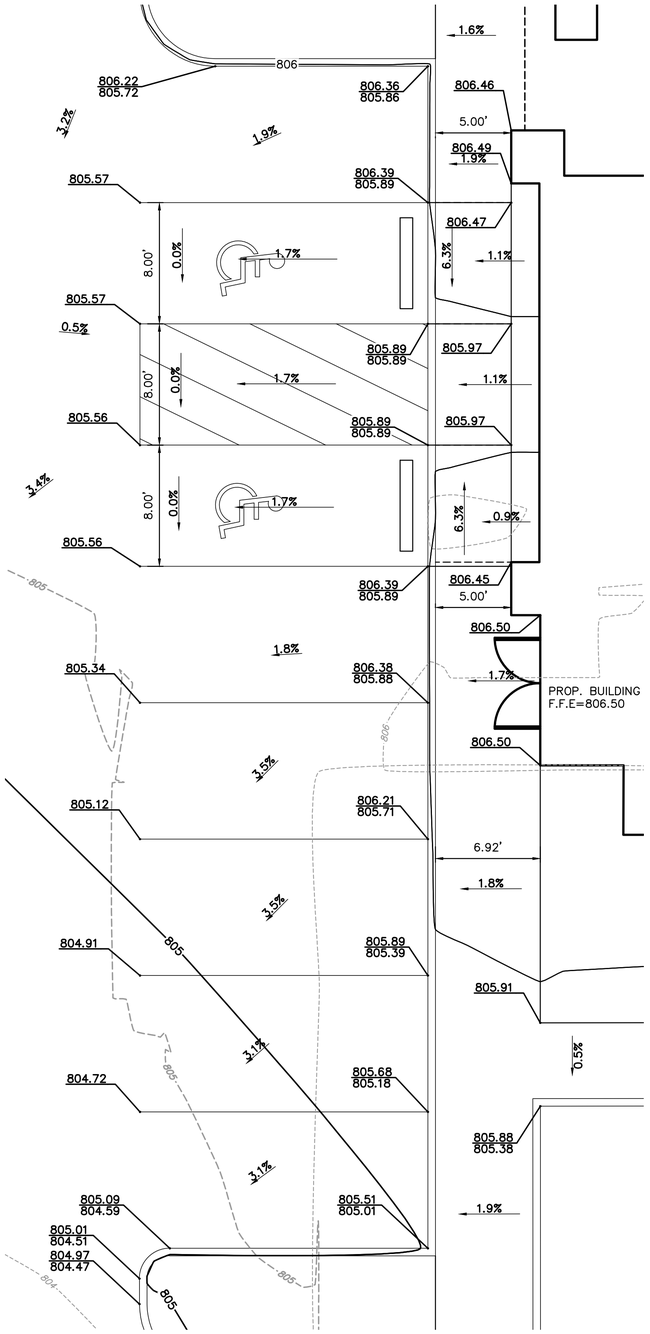

GRADING DETAIL NO. 1

SCALE: 1"=5'

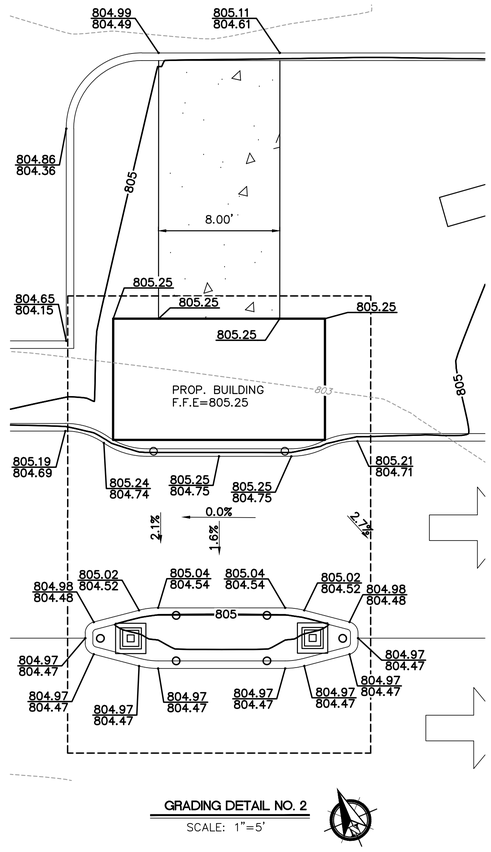

GRADING DETAIL NO. 2

SCALE: 1"=5'

GRADING PLAN LEGEND

800 PROPOSED 5' CONTOUR	XXX.XX PROPOSED PAVEMENT GRADE
800 PROPOSED 1' CONTOUR	XXX.XX PROPOSED GROUND GRADE
800 EXISTING 5' CONTOUR	EX.=XXX.XX MATCH EXISTING GRADE
800 EXISTING 1' CONTOUR	XXX.XX PROPOSED TOP OF CURB XXX.XX PROPOSED EDGE OF PAVEMENT
	GRATE=XXX.XX PROPOSED TOP OF GRATE
	F.F.E.=21.95 FINISHED FLOOR ELEVATION
	XX% PROPOSED SLOPE
	PROPOSED DRAINAGE BOUNDARY
	FGTW = XXX.XX FINISH GRADE TOP OF WALL
	FGBW = XXX.XX FINISH GRADE BOTTOM OF WALL
	MAJOR STORM RUNOFF PATH

GRADING PLAN NOTES

1. INFORMATION CONCERNING SITE SOIL CONDITIONS WILL BE PROVIDED BY THE OWNER.
2. CONTRACTOR SHALL BE RESPONSIBLE FOR REMOVAL OF ALL DEBRIS AS ACCEPTABLE TO THE OWNER AND ENGINEER.
3. IF CONTRACTOR DOES NOT ACCEPT EXISTING TOPOGRAPHY AS SHOWN ON THE PLANS, WITHOUT EXCEPTION, THE CONTRACTOR SHALL HAVE MADE, AT THEIR OWN EXPENSE, A TOPOGRAPHIC SURVEY AND SUBMIT IT TO THE OWNER FOR REVIEW.
4. CONTRACTOR IS RESPONSIBLE FOR NOTIFYING ALL UTILITIES BEFORE CONSTRUCTION AND VERIFYING LOCATION OF ALL UTILITIES SHOWN OR NOT SHOWN.
5. CONTRACTOR SHALL PROVIDE POSITIVE DRAINAGE AWAY FROM THE BUILDINGS.
6. CONTRACTOR SHALL BE RESPONSIBLE FOR COORDINATION AND COST OF THE RELOCATION ALL UTILITIES ALONG THE RIGHT OF WAY AND ON SITE ASSOCIATED WITH THE CONSTRUCTION OF THIS PROJECT, SUCH AS, BUT NOT LIMITED TO SIGNAL POLES, SIGNAL CONTROLS, DRAINAGE STRUCTURES, TRAFFIC SIGNS, UTILITY POLES, GUY WIRES, ETC.
7. THE EARTHWORK FOR ALL BUILDING FOUNDATIONS AND SLABS SHALL BE IN ACCORDANCE WITH ARCHITECTURAL PLANS AND SPECIFICATIONS.
8. CONTRACTOR IS RESPONSIBLE FOR REPAIRS OF DAMAGE TO ANY EXISTING IMPROVEMENTS DURING CONSTRUCTION, SUCH AS, BUT NOT LIMITED TO, DRAINAGE, UTILITIES, PAVEMENT, STRIPING, CURBS, ETC. REPAIRS SHALL BE EQUAL TO OR BETTER THAN EXISTING CONDITIONS.
9. ALL SLOPES AND DISTURBED AREAS NOT COVERED BY BUILDING OR PAVEMENT SHALL BE GRADED SMOOTH AND RECEIVE 4 INCHES OF TOPSOIL. CONTRACTOR TO PROVIDE TOPSOIL IF NOT AVAILABLE ON SITE. THE AREAS SHALL BE SEEDED AND MULCHED, FERTILIZED AND WATERED TO PROVIDE A HEARTY MOWABLE STAND OF GRASS. SMALL ROCKS MUST BE REMOVED. ANY AREAS DISTURBED FOR ANY REASON PRIOR TO FINAL ACCEPTANCE OF THE PROJECT SHALL BE CORRECTED BY THE CONTRACTOR AT NO ADDITIONAL COST TO THE OWNER.
10. SPOIL FROM FOOTING IS THE SITE CONTRACTOR'S RESPONSIBILITY. CONTRACTOR IS TO USE THE SOIL ON SITE OR REMOVE IT FROM SITE.
11. ALL SPOT ELEVATIONS ARE TOP OF PAVEMENT UNLESS OTHERWISE NOTED.
12. MAXIMUM SLOPE IN HANDICAP ACCESSIBLE AREAS SHALL COMPLY WITH ADA REQUIREMENTS AND SHALL NOT EXCEED 2.0% IN ANY DIRECTION IN PAVED AREAS AND ALONG THE ACCESSIBLE ROUTE
13. GRADING PLAN ASSUMES SIDEWALK IS FLUSH WITH FINISH FLOOR. IF ARCHITECTURALS CALL FOR A BRICK VENEER SHELF CONTRACTOR TO FIELD ADJUST SIDEWALK AND INTEGRAL CURB SIDEWALK ELEVATIONS AT DOOR THRESHOLDS AND SHELF TO MEET PROPOSED GRADES.

GRAPHIC SCALE

5 2 1/2 0 5

(IN FEET)

1 inch = 5 ft.

IBI GROUP
8101 North High Street
Suite 100
Columbus, OH 43235
tel 614 818 4900
fax 614 818 4901
Contact: Eric Chenevey Ext: 2041
ibigroup.com

REVISION:

SUBMISSION:

- ☐ PRELIMINARY ENGINEERING SET
- ■ AGENCY REVIEW SET
- ☐ CONSTRUCTION DOCUMENT SET
- ☐ AS-BUILT DOCUMENT SET

STAMP:

STATE OF OHIO
ERIC P. CHENEVEY
E-55806
REGISTERED
PROFESSIONAL ENGINEER

WARREN COUNTY, OH 45066

RIVER VALLEY CREDIT UNION

25 WEST CENTRAL AVENUE, SPRNIGBORO

DESIGN	DRAFT	CHECK
WTC	MA	EPC

IBI NO.: 141829

DATE: JUNE 23, 2023

SCALE:

SHEET TITLE:

GRADING DETAILS

SHEET NO.: C301

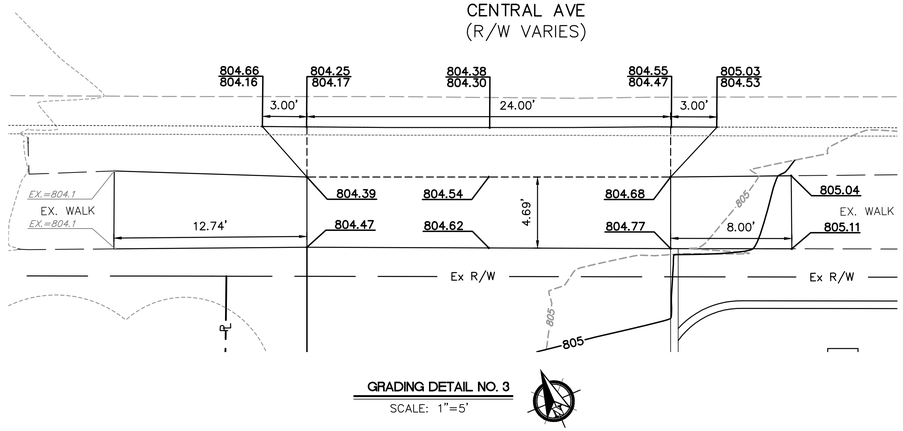

GRADING DETAIL NO. 3
SCALE: 1"=5'

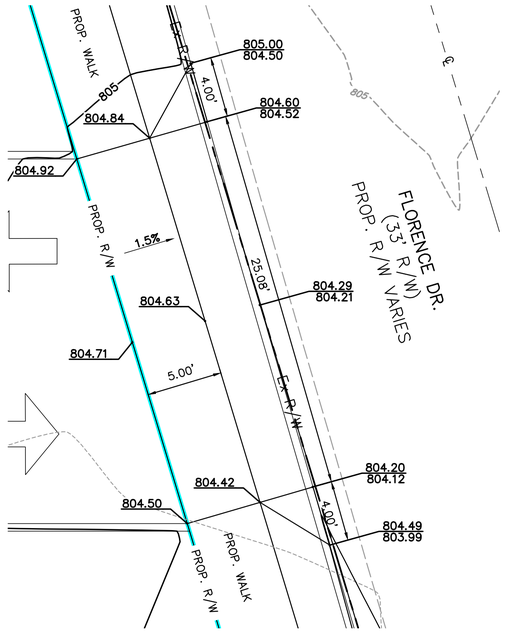

GRADING DETAIL NO. 4
SCALE: 1"=5'

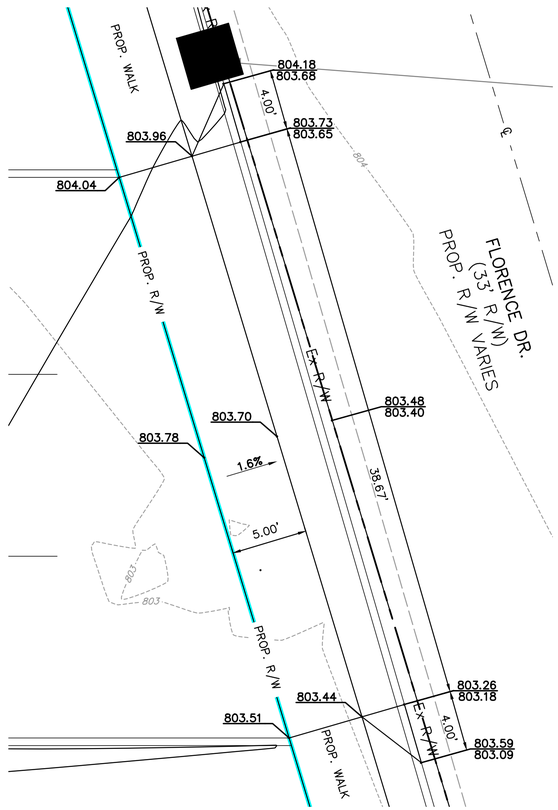

GRADING DETAIL NO. 5
SCALE: 1"=5'

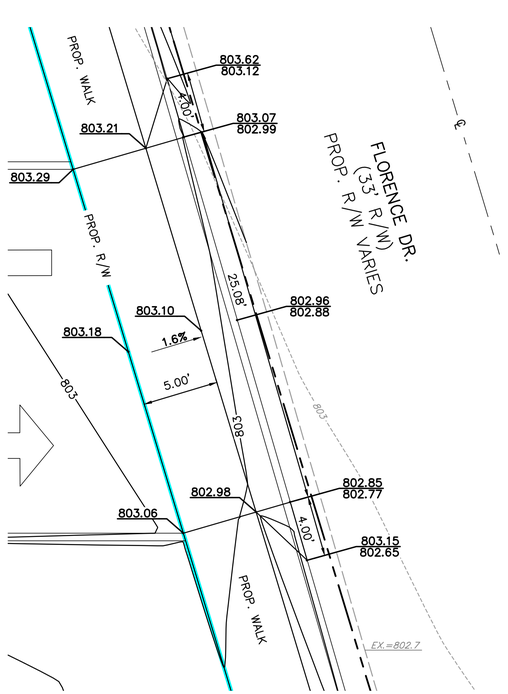

GRADING DETAIL NO. 6
SCALE: 1"=5'

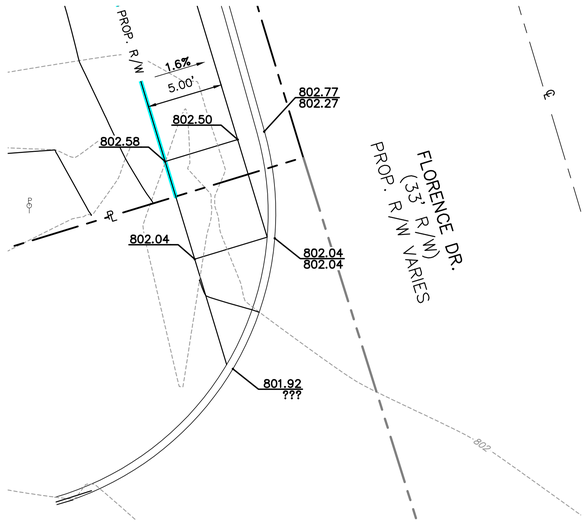

GRADING DETAIL NO. 7
SCALE: 1"=5'

GRADING PLAN LEGEND

PROPOSED 5' CONTOUR	XXX.XX PROPOSED PAVEMENT GRADE
PROPOSED 1' CONTOUR	XXX.XX PROPOSED GROUND GRADE
EXISTING 5' CONTOUR	EX.=XXX.XX MATCH EXISTING GRADE
EXISTING 1' CONTOUR	XXX.XX PROPOSED TOP OF CURB XXX.XX PROPOSED EDGE OF PAVEMENT
	GRATE=XXX.XX PROPOSED TOP OF GRATE
	F.F.E.=21.95 FINISHED FLOOR ELEVATION
	XX% PROPOSED SLOPE
	PROPOSED DRAINAGE BOUNDARY
	FGTW = XXX.XX FINISH GRADE TOP OF WALL
	FGBW = XXX.XX FINISH GRADE BOTTOM OF WALL
	MAJOR STORM RUNOFF PATH

GRADING PLAN NOTES

1. INFORMATION CONCERNING SITE SOIL CONDITIONS WILL BE PROVIDED BY THE OWNER.
2. CONTRACTOR SHALL BE RESPONSIBLE FOR REMOVAL OF ALL DEBRIS AS ACCEPTABLE TO THE OWNER AND ENGINEER.
3. IF CONTRACTOR DOES NOT ACCEPT EXISTING TOPOGRAPHY AS SHOWN ON THE PLANS, WITHOUT EXCEPTION, THE CONTRACTOR SHALL HAVE MADE, AT THEIR OWN EXPENSE, A TOPOGRAPHIC SURVEY AND SUBMIT IT TO THE OWNER FOR REVIEW.
4. CONTRACTOR IS RESPONSIBLE FOR NOTIFYING ALL UTILITIES BEFORE CONSTRUCTION AND VERIFYING LOCATION OF ALL UTILITIES SHOWN OR NOT SHOWN.
5. CONTRACTOR SHALL PROVIDE POSITIVE DRAINAGE AWAY FROM THE BUILDINGS.
6. CONTRACTOR SHALL BE RESPONSIBLE FOR COORDINATION AND COST OF THE RELOCATION ALL UTILITIES ALONG THE RIGHT OF WAY AND ON SITE ASSOCIATED WITH THE CONSTRUCTION OF THIS PROJECT, SUCH AS, BUT NOT LIMITED TO SIGNAL POLES, SIGNAL CONTROLS, DRAINAGE STRUCTURES, TRAFFIC SIGNS, UTILITY POLES, GUY WIRES, ETC.
7. THE EARTHWORK FOR ALL BUILDING FOUNDATIONS AND SLABS SHALL BE IN ACCORDANCE WITH ARCHITECTURAL PLANS AND SPECIFICATIONS.
8. CONTRACTOR IS RESPONSIBLE FOR REPAIRS OF DAMAGE TO ANY EXISTING IMPROVEMENTS DURING CONSTRUCTION, SUCH AS, BUT NOT LIMITED TO, DRAINAGE, UTILITIES, PAVEMENT, STRIPING, CURBS, ETC. REPAIRS SHALL BE EQUAL TO OR BETTER THAN EXISTING CONDITIONS.
9. ALL SLOPES AND DISTURBED AREAS NOT COVERED BY BUILDING OR PAVEMENT SHALL BE GRADED SMOOTH AND RECEIVE 4 INCHES OF TOPSOIL. CONTRACTOR TO PROVIDE TOPSOIL IF NOT AVAILABLE ON SITE. THE AREAS SHALL BE SEEDED AND MULCHED, FERTILIZED AND WATERED TO PROVIDE A HEARTY MOWABLE STAND OF GRASS. SMALL ROCKS MUST BE REMOVED. ANY AREAS DISTURBED FOR ANY REASON PRIOR TO FINAL ACCEPTANCE OF THE PROJECT SHALL BE CORRECTED BY THE CONTRACTOR AT NO ADDITIONAL COST TO THE OWNER.
10. SPOIL FROM FOOTING IS THE SITE CONTRACTOR'S RESPONSIBILITY. CONTRACTOR IS TO USE THE SOIL ON SITE OR REMOVE IT FROM SITE.
11. ALL SPOT ELEVATIONS ARE TOP OF PAVEMENT UNLESS OTHERWISE NOTED.
12. MAXIMUM SLOPE IN HANDICAP ACCESSIBLE AREAS SHALL COMPLY WITH ADA REQUIREMENTS AND SHALL NOT EXCEED 2.0% IN ANY DIRECTION IN PAVED AREAS AND ALONG THE ACCESSIBLE ROUTE
13. GRADING PLAN ASSUMES SIDEWALK IS FLUSH WITH FINISH FLOOR. IF ARCHITECTURALS CALL FOR A BRICK VENEER SHELF CONTRACTOR TO FIELD ADJUST SIDEWALK AND INTEGRAL CURB SIDEWALK ELEVATIONS AT DOOR THRESHOLDS AND SHELF TO MEET PROPOSED GRADES.

GRAPHIC SCALE
5 2 1/2 0 5
(IN FEET)
1 inch = 5 ft.

IBI GROUP
8101 North High Street
Suite 100
Columbus, OH 43235
tel 614 818 4900
fax 614 818 4901
Contact: Eric Chenevey Ext: 2041
ibigroup.com

REVISION:

SUBMISSION:

- ☐ PRELIMINARY ENGINEERING SET
- ■ AGENCY REVIEW SET
- ☐ CONSTRUCTION DOCUMENT SET
- ☐ AS-BUILT DOCUMENT SET

STAMP:

STATE OF OHIO
ERIC P. CHENEVEY
E-55806
REGISTERED
PROFESSIONAL ENGINEER

WARREN COUNTY, OH 45066

RIVER VALLEY CREDIT UNION

25 WEST CENTRAL AVENUE, SPRNIGBORO

DESIGN	DRAFT	CHECK
WTC	MA	EPC

IBI NO.: 141829
DATE: JUNE 23, 2023
SCALE:

SHEET TITLE:
GRADING DETAILS

SHEET NO.: C302

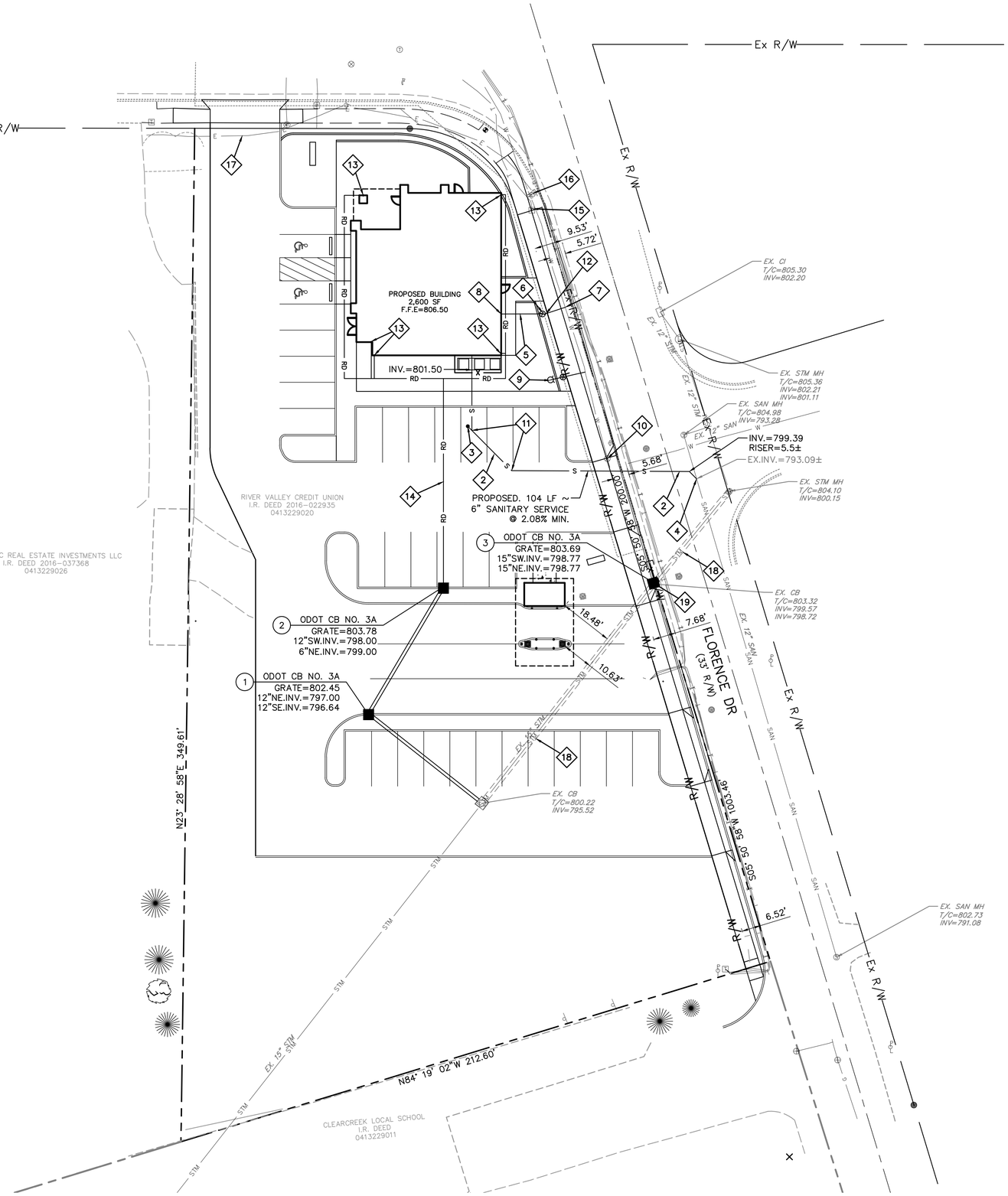

UTILITY LEGEND

SIGN		GAS LINE	—G—
EX. SANITARY LINE	—SAN—	WATER LINE	—W—
EX. STORM SEWER LINE	—STM—	GAS METER	G
FIRE HYDRANT		IRON PIN FOUND (AS NOTED)	
WATER VALVE		UNDERGROUND ELECTRIC LINE	—E—
WATER METER	W	UNDERGROUND COMMUNICATION LINE	—T—
UTILITY BOX		OVERHEAD POWER LINE	—OHL—
LIGHT POLE		UNDERGROUND FIBER OPTIC LINE	—FO—
COMMUNICATION BOX	T		
MAIL BOX	M		
SANITARY MANHOLE	S		
SANITARY CLEANOUT			
BENCHMARK			

UTILITY KEYNOTE LEGEND

1. PROPOSED ELECTRICAL TRANSFORMER AND CONCRETE PAD
2. PROPOSED 6" SANITARY SERVICE LATERAL (MINIMUM 2.08% GRADE)
3. PROPOSED SANITARY CLEAN OUT TO BE TRAFFIC BEARING.
4. PROPOSED SANITARY SERVICE CONNECTION. SEE SHEET ## FOR DETAIL.
5. PROPOSED 1" PEX DOMESTIC WATER SERVICE
6. PROPOSED 1" GATE VALVE AND VALVE BOX
7. PROPOSED 1" X #" X #" TAPPING SLEEVE
8. PROPOSED WATER METER AND BACKFLOW PREVENTER TO BE LOCATED INSIDE BUILDING. REFER TO MEP PLANS FOR MORE INFORMATION
9. EXISTING FIRE HYDRANT AND VALVE ASSEMBLY TO BE RELOCATED. COORDINATE WITH CITY ON FINAL LOCATION.
10. EXISTING WATER VALVE TO BE ADJUSTED TO GRADE.
11. PROPOSED 45 DEGREE BEND.
12. PROPOSED 22.5 DEGREE BEND
13. PROPOSED ROOF DRAIN COLLECTOR CONNECTION TO DOWNSPOUT. REFER TO MEP PLANS FOR MORE INFORMATION.
14. PROPOSED 6" ROOF DRAIN COLLECTOR PIPE. CONNECT TO PROPOSED CATCH BASIN.
15. EXISTING COMMUNICATIONS STRUCTURE TO BE ADJUSTED TO GRADE.
16. EXISTING ELECTRICAL STRUCTURE TO BE ADJUSTED TO GRADE.
17. EXISTING ELECTRICAL SERVICE TO REMAIN.
18. EXISTING 15" STORM SEWER TO REMAIN.
19. EXISTING CATCH BASIN TO BE REMOVED AND REPLACED WITH ODOT CB 3A.

UTILITY PLAN NOTES

1. SEE ARCHITECTURAL PLUMBING PLANS FOR PLUMBING DETAILS TO AREAS FIVE (5) FEET OUTSIDE AND INSIDE OF THE PROPOSED STRUCTURE.
2. WATER LINES THROUGHOUT THE PROJECT SHALL BE INSTALLED WITH AT LEAST 40 INCHES OF COVER TO PROVIDE PROTECTION FROM FREEZING.
3. LOCATIONS OF EXISTING UNDERGROUND UTILITY LOCATIONS ARE APPROXIMATE. THE CONTRACTOR IS TO FIELD VERIFY ALL HORIZONTAL AND VERTICAL LOCATIONS PRIOR TO CONSTRUCTION.
4. SEE SHEETS C401 FOR ALL UTILITY DETAILS.
5. WATER AND SEWER CROSSINGS AND SEPARATIONS SHALL BE IN ACCORDANCE WITH LOCAL CODES.
6. TOP OF CASTING (TC) TC SHALL INDICATE THE ELEVATION THAT WATER WOULD ENTER A STRUCTURE, WHEN A STRUCTURE IS NOT A CURB INLET. TC SHALL INDICATE TOP OF CURB WHEN STRUCTURE IS A CURB INLET.
7. ANY DISCREPANCIES OR CONFLICTS WHICH BECOME APPARENT BEFORE OR DURING CONSTRUCTION SHALL BE BROUGHT TO THE ATTENTION OF THE DESIGN ENGINEER PRIOR TO CONSTRUCTION SO THAT CLARIFICATION OR REDESIGN MAY OCCUR.
8. ALL SANITARY SEWER LATERALS ARE TO BE CONSTRUCTED WITH 6" SDR-26 PVC.
9. ALL STORM STRUCTURES AND INLETS TO HAVE QUAD 10 LF 6" PERFORATED DUAL WALL HDPE LITA GEOTEXTILE SOCK SUBSURFACE DRAINS.
10. WATER PIPE 3" AND ABOVE WILL BE AWWA C-151, DCI CLASS 51 OR GREATER. WATER PIPE 2" AND BELOW WILL BE PEX PIPE.
11. CONTRACTOR TO REVIEW GEOTECHNICAL REPORT AND TAKE DEWATERING MEASURES AROUND FOUNDATIONS AND UTILITY STRUCTURES DURING CONSTRUCTION PROCESS.
12. A PLUMBING PERMIT AND INSPECTION ARE REQUIRED FROM THE CITY OF SPRINGBORO PUBLIC WORKS DEPARTMENT.
13. CONTRACTOR SHALL PROVIDE TRACER WIRE FOR ALL WATER AND SEWER MAINS OR SERVICES PER THE CITY OF SPRINGBORO REGULATIONS.

GRAPHIC SCALE
20 10 0 20
(IN FEET)
1 inch = 20 ft.

IBI GROUP
8101 North High Street
Suite 100
Columbus, OH 43235
tel 614 818 4900
fax 614 818 4901
Contact: Eric Chenevey Ext: 2041
ibigroup.com

REVISION:

SUBMISSION:

- ☐ PRELIMINARY ENGINEERING SET
- ■ AGENCY REVIEW SET
- ☐ CONSTRUCTION DOCUMENT SET
- ☐ AS-BUILT DOCUMENT SET

STAMP:

STATE OF OHIO
ERIC P. CHENEVEY
E-55806
REGISTERED
PROFESSIONAL ENGINEER

WARREN COUNTY, OH 45066

RIVER VALLEY CREDIT UNION

25 WEST CENTRAL AVENUE, SPRNIGBORO

DESIGN	DRAFT	CHECK
WTC	MA	EPC

IBI NO.: 141829

DATE: JUNE 23, 2023

SCALE:

SHEET TITLE: UTILITY PLAN

SHEET NO.: C400

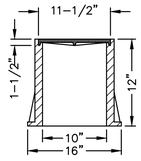

SECTION

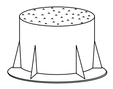

(APPROX. WT. 110 LBS)

ISOMETRIC

NOTE: CLEANOUT TOP OF CASTING SHALL BE SET FLUSH WITH FINISHED GRADE IN PAVEMENT AREAS OR 2" MIN. TO 4" MAX. ABOVE FINISHED GRADE IN NON-PAVED AREAS.

CLEANOUT FRAME & LID

NO SCALE

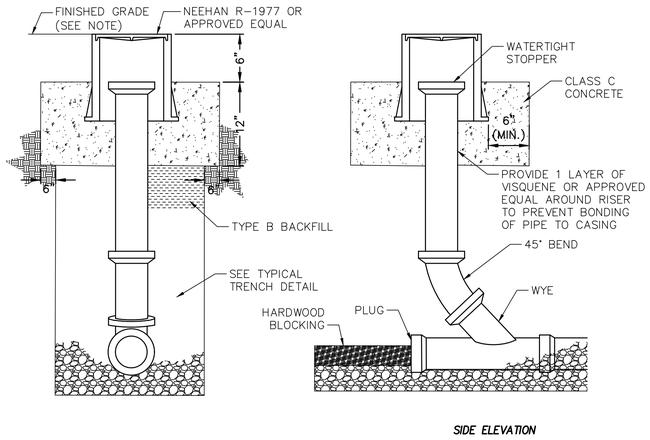

END ELEVATION

SIDE ELEVATION

CLEANOUT

NO SCALE

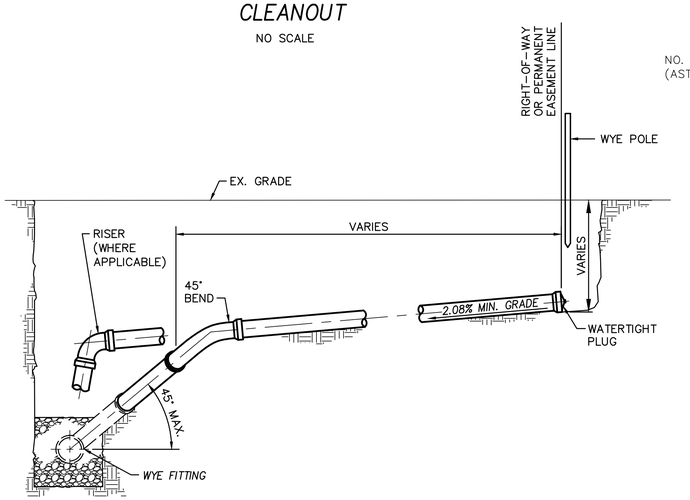

TYPICAL SERVICE LATERAL DETAIL

NO SCALE

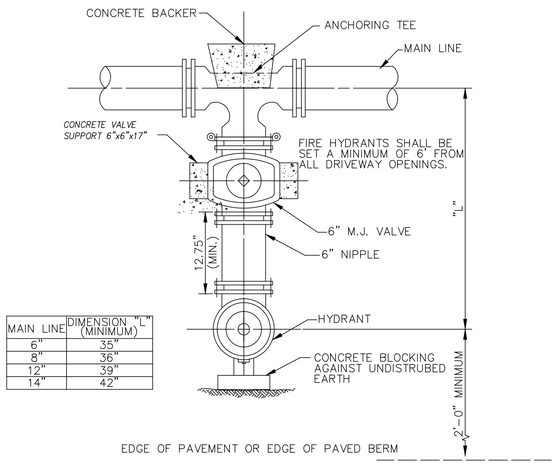

MAIN LINE	DIMENSION "L" (MINIMUM)
6"	35"
8"	36"
12"	39"
14"	42"

TYPICAL HYDRANT SETTING TYPE "A"

NO SCALE

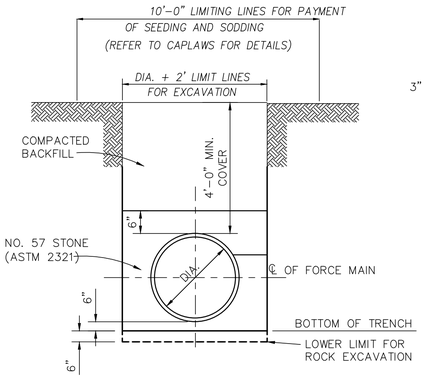

TRENCH DETAIL IN GRASSY AREA

NO SCALE

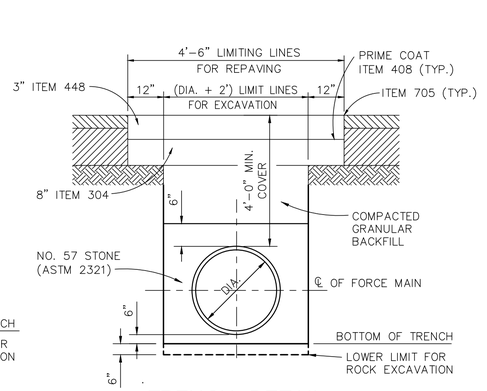

TRENCH DETAIL UNDER PAVEMENT

NO SCALE

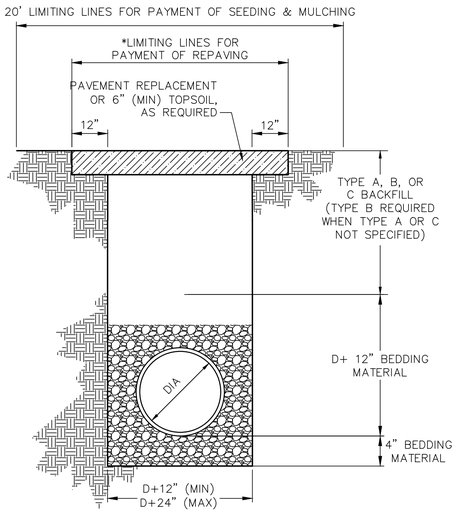

NOTES:

1. ITEM NUMBER REFER TO STATE OF OHIO, DEPARTMENT OF TRANSPORTATION, CONSTRUCTION AND MATERIAL SPECIFICATIONS.
2. AGGREGATE FOR BEDDING IS NO. 57, NO. 6, NO.76, NO. 68, OR NO. 7, ITEM 703
3. TYPE A BACKFILL SHALL BE COMPACTED GRANULAR MATERIAL AS SPECIFIED IN ITEM 304, GRADE A. TYPE A BACKFILL SHALL BE USED WHEN THE TRENCH IS 5' OR LESS FROM ANY PAVED OR GRAVEL SURFACE, OR BENEATH THE PAVEMENT OR GRAVEL. COMPACTION SHALL MEET THE REQUIREMENTS OF ITEM 203.
4. TYPE B BACKFILL SHALL BE NATURAL SOIL FREE FROM STONES LARGER THAN 2" ACROSS THEIR GREATEST DIMENSION, TOPSOIL, VEGETATION, DEBRIS, RUBBISH, OR FROZEN MATERIAL, COMPACTED TO 95% OF ITS MAXIMUM LABORATORY DRY WEIGHT.
5. TYPE C BACKFILL SHALL BE NATURAL SOIL FREE FROM STONES LARGER 6" ACROSS THEIR GREATEST DIMENSION, TOPSOIL, VEGETATION, DEBRIS, RUBBISH, OR FROZEN MATERIAL, COMPACTED TO 90% OF ITS MAXIMUM LABORATORY DRY WEIGHT. WHEN APPROVED BY THE ENGINEER, STONES NO LARGER THAN ONE CUBIC FOOT MAY BE DEPOSITED AT LEAST 3' ABOVE THE TOP OF THE PIPE.
6. THE EXCAVATED TRENCH WIDTH 12" ABOVE THE CONDUIT MAY BE INCREASED WITHOUT EXTRA COMPENSATION.
7. RIGID PIPE SHALL BE DUCTILE IRON, THICKNESS CLASS 53, PRESSURE RATING 350. FLEXIBLE PIPE SHALL BE PVC C-909 DR14 FOR SIZING UP TO 12" AND PVC C-905 DR18 FOR LARGER SIZES.
8. WHEN CALLED FOR ON THE CONSTRUCTION DRAWINGS, ENCASEMENT SHALL BE CLASS C CONCRETE.
9. SECTIONS ARE SYMMETRICAL ABOUT THE CENTERLINE.
10. GRANULAR BEDDING AND BACKFILL SHALL NOT BE REQUIRED FOR DUCTILE IRON PIPE UNLESS WITHIN LIMITS REQUIRING GRANULAR BACKFILL FOR ROADS AND DRIVEWAYS.
11. COVER OVER PIPE SHALL BE AS SPECIFIED ON PLANS. UNLESS OTHER WISE SPECIFIED, ROOF DRAINS SHALL HAVE 30" MIN. COVER AND SANITARY SEWER SERVICES SHALL HAVE 48" MIN. COVER.

TYPICAL TRENCH FOR PVC/HDPE STORM & SANITARY PIPE

NO SCALE

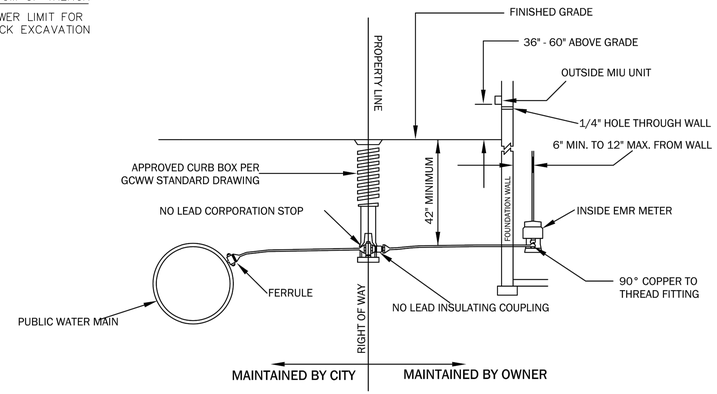

DETAILS

A) SEE 108-1D FOR MATERIAL & CONSTRUCTION SPECIFICATIONS.
B) SEE 108-3A FOR METER COUPLING SETTING DETAILS FOR 5/8" METERS.
C) SEE 108-3B FOR METER COUPLING SETTING DETAILS FOR 3/4" & 1" METERS.
E) SEE 108-3C FOR METER COUPLING SETTING DETAILS FOR 1 1/2" & 2" METERS.
F) INSULATING COUPLING TO BE INSTALLED ON HOUSE SIDE OF CORPORATION STOP.

TYPICAL WATER SERVICE LATERAL DETAIL

NO SCALE

IBI GROUP
8101 North High Street
Suite 100
Columbus, OH 43235
tel 614 818 4900
fax 614 818 4901
Contact: Eric Chenevey Ext: 2041
ibigroup.com

REVISION:

SUBMISSION:

- ☐ PRELIMINARY ENGINEERING SET
- ■ AGENCY REVIEW SET
- ☐ CONSTRUCTION DOCUMENT SET
- ☐ AS-BUILT DOCUMENT SET

STAMP:

STATE OF OHIO ERIC P. CHENEVEY E-55806 REGISTERED PROFESSIONAL ENGINEER

WARREN COUNTY, OH 45066

RIVER VALLEY CREDIT UNION

25 WEST CENTRAL AVENUE, SPRNIGBORO

DESIGN	DRAFT	CHECK
WTC	MA	EPC

IBI NO.: 141829

DATE: JUNE 23, 2023

SCALE:

SHEET TITLE: UTILITY DETAILS

SHEET NO.: C401

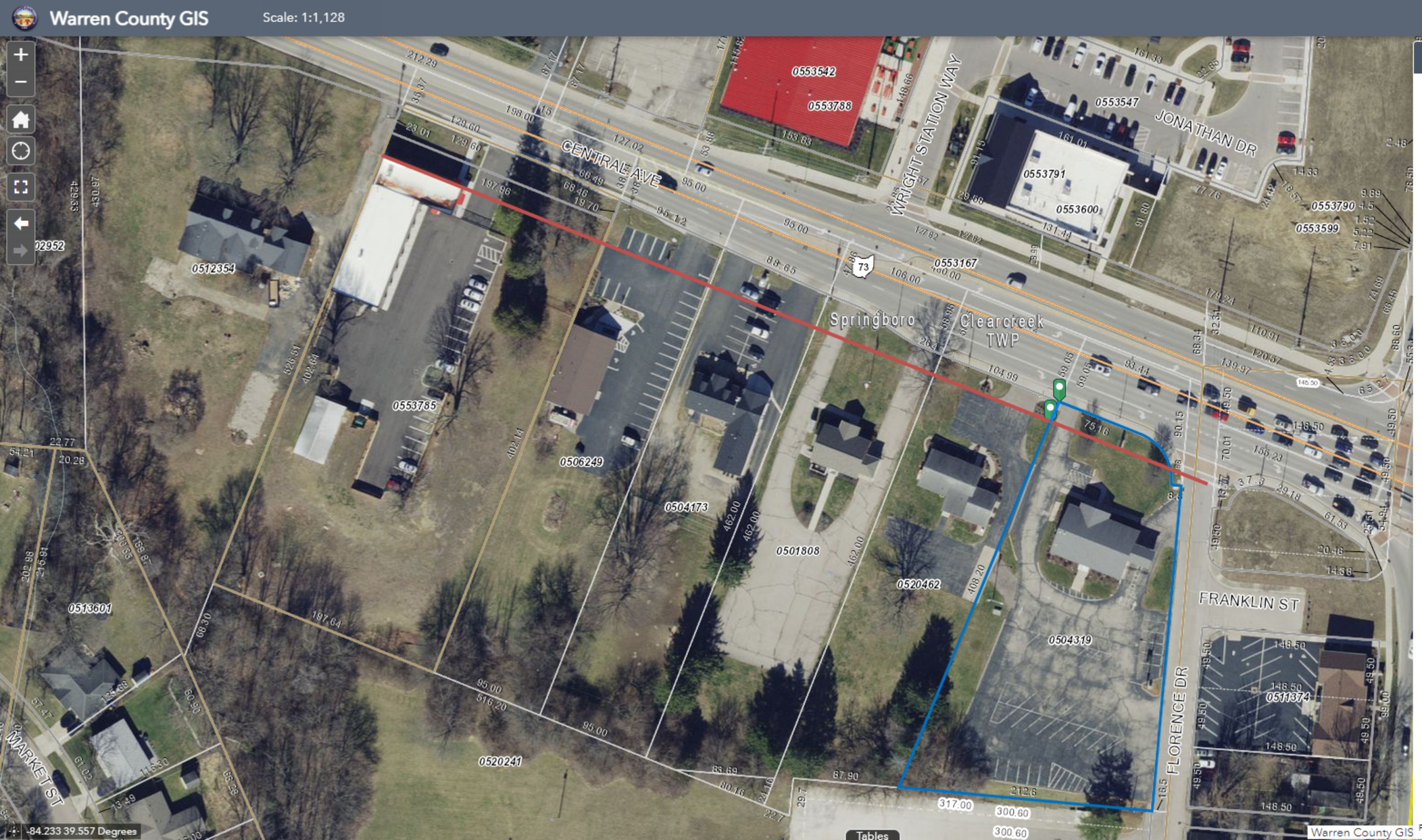

Measurement

Feet (US)

Measurement Result

19 Feet (US)

Clear

6.22.23: Exhibit showing that the new River Valley Credit Union will be approximately aligned with the front of the new Foreign Exchange building

page 1/2

Press CTRL to enable snapping

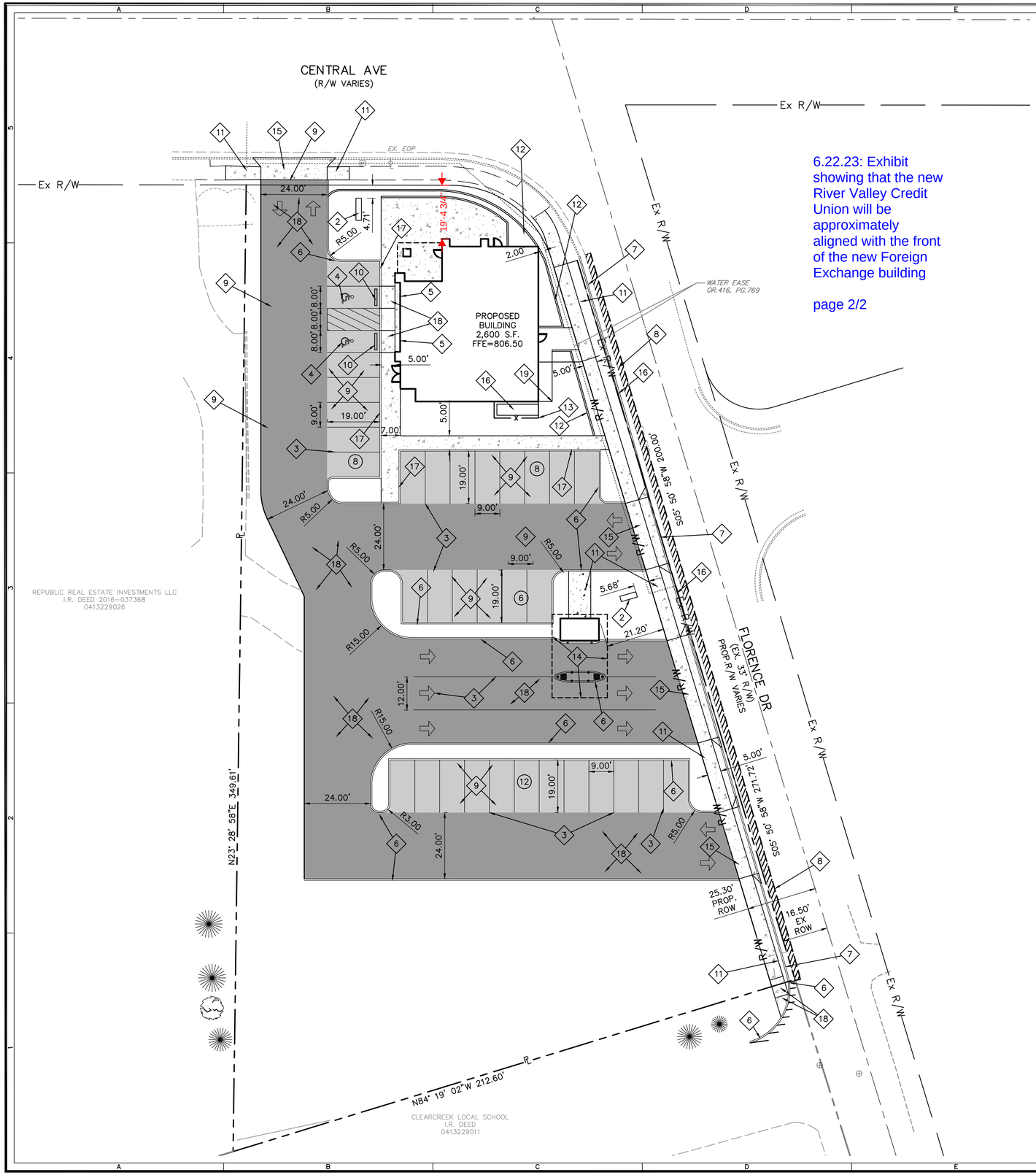

6.22.23: Exhibit showing that the new River Valley Credit Union will be approximately aligned with the front of the new Foreign Exchange building

page 2/2

SITE PLAN LEGEND

- BOUNDARY LINE
- SETBACK LIMITS
- RIGHT-OF-WAY (Ex R/W)
- PROPOSED FULL-DEPTH SAWCUT LOCATION
- EXISTING TREE LINE
- (6) PARKING COUNT
- PROPOSED LIGHT DUTY ASPHALT PAVEMENT
- PROPOSED HEAVY DUTY ASPHALT PAVEMENT
- PROPOSED CONCRETE
- PROPOSED FULL DEPTH PAVEMENT

SITE DATA

ADDRESS: 25 W CENTRAL AVENUE SPRINGBORO, OH 45066

PARCEL #: 04132290200

EXISTING SITE AREA: 1.17 AC.±
PROPOSED SITE AREA: 1.12 AC.±
ROW DEDICATION AREA: 0.05 AC.±

ZONING: UVD – URBAN VILLAGE DISTRICT

EXISTING USE: CREDIT UNION
PROPOSED USE: CREDIT UNION

IMPERVIOUS AREA: EXISTING = 0.793 AC.±
PROPOSED = 0.648 AC.±

NET REDUCTION IN IMPERVIOUS AREA = 0.145 AC.±

BUILDING AREA: 2,600 S.F.

SETBACKS: REAR – 0'
FRONT – 0'
SIDE – 0'

PARKING: COMMERCIAL, OFFICE AND SERVICE USES (DEFAULT)

REQUIRED MINIMUM STANDARD SPACES:

1 SPACE / 275 S.F BUILDING = 10 SPACES

PROPOSED PARKING:

STANDARD SPACES = 32
ADA SPACES = 2
TOTAL SPACES = 34

SITE WORK GENERAL NOTES AND SPECIFICATIONS

1. THE CONTRACTOR SHALL BE RESPONSIBLE FOR OBTAINING OR VERIFYING THAT ALL PERMITS AND APPROVALS ARE OBTAINED FROM THE RESPECTIVE TOWNSHIP, CITY/TOWN, COUNTY, AND STATE AGENCIES PRIOR TO STARTING CONSTRUCTION.
2. IT SHALL BE THE CONTRACTORS RESPONSIBILITY TO DETERMINE THE EXACT LOCATION OF ALL EXISTING UTILITIES IN THE VICINITY OF THE CONSTRUCTION AREA PRIOR TO STARTING CONSTRUCTION.
3. IT SHALL BE THE CONTRACTORS RESPONSIBILITY FOR NOTIFICATION AND COORDINATION OF ALL CONSTRUCTION WITHIN THE RESPECTIVE UTILITY COMPANIES.
4. IT SHALL BE THE RESPONSIBILITY OF THE DEVELOPER AND CONTRACTOR TO MAINTAIN QUALITY CONTROL THROUGHOUT THE PROJECT; FAILURE TO DO SO MAY RESULT IN REMOVAL AND REPLACEMENT OF THE DEFECTIVE WORK. IT IS RECOMMENDED THAT THE DEVELOPER HAVE A QUALIFIED INSPECTOR ON THE JOB SITE AT ALL TIMES DURING CONSTRUCTION.
5. IT IS ESSENTIAL THAT THE WORK TO BE DONE IN CONJUNCTION WITH THIS PROJECT SHALL BE INSTALLED ACCORDING TO THESE SPECIFICATIONS. THE ENGINEER WILL BE REQUIRED TO CERTIFY TO CERTAIN PORTIONS OF THIS PROJECT UPON COMPLETION . THEREFORE IT IS NECESSARY TO OBTAIN APPROVAL AND ACCEPTANCE BY THE CITY THAT CONSTRUCTION WAS DONE IN COMPLIANCE WITH THESE PLANS AND SPECIFICATIONS.
6. ALL QUANTITIES GIVEN ON THE PRINTS, VERBALLY, OR IN THE SCOPE OF WORK SECTION ARE ESTIMATES AND SHALL BE CONFIRMED BY THE BIDDING CONTRACTOR.
7. EXCAVATIONS EXCEEDING TWENTY (20) FEET IN DEPTH REQUIRE THE DESIGN OF A TRENCH SAFETY SYSTEM BY A REGISTERED PROFESSIONAL ENGINEER.

SITE KEYNOTE LEGEND

1. PROPOSED CONCRETE TRANSFORMER PAD
2. PROPOSED MONUMENT SIGN
3. PROPOSED PARKING STALL STRIPING
4. PROPOSED ADA PARKING STALLS, SEE DETAILS ON SHEET C202
5. PROPOSED ADA PARKING SIGN. SEE DETAIL SHEET C202
6. PROPOSED CONCRETE STRAIGHT CURB. SEE DETAIL SHEET C202
7. PROPOSED CURB & GUTTER, SEE DETAILS SHEET C202
8. PROPOSED ASPHALT PAVEMENT. BUILDUP TO MATCH MATERIAL & DEPTH OF FLORENCE DRIVE.
9. PROPOSED LIGHT DUTY ASPHALT
10. PROPOSED CONCRETE WHEEL STOP (TYP.) SEE DETAIL SHEET C202
11. PROPOSED SIDEWALK.
12. PROPOSED LANDSCAPE BED.
13. PROPOSED SCREENING WALL. SEE ARCHITECTURAL PLAN FOR MORE INFORMATION
14. PROPOSED ATM DRIVE-THRU & CANOPY.
15. PROPOSED CONCRETE DRIVE APRON.
16. PROPOSED MECHANICAL UNITS AND CONCRETE PAD. SEE MEP PLANS FOR MORE INFORMATION
17. PROPOSED INTEGRAL CURB AND WALK. SEE DETAIL SHEET C202
18. PROPOSED ADA CURB RAMP.
19. PROPOSED HEAVY DUTY ASPHALT. SEE DETAIL SHEET C202
19. PROPOSED CONCRETE REFUSE BIN PAD. (REFER TO LANDSCAPE PLANS FOR SCREENING)

GRAPHIC SCALE
20 10 0 20
(IN FEET)
1 inch = 20 ft.

IBI GROUP
8101 North High Street
Suite 100
Columbus, OH 43235
tel 614 818 4900
fax 614 818 4901
Contact: Eric Chenevey Ext: 2041
ibigroup.com

REVISION:

SUBMISSION:

- ☐ PRELIMINARY ENGINEERING SET
- ■ AGENCY REVIEW SET
- ☐ CONSTRUCTION DOCUMENT SET
- ☐ AS-BUILT DOCUMENT SET

STAMP:

WARREN COUNTY, OH 45066

RIVER VALLEY CREDIT UNION

25 WEST CENTRAL AVENUE, SPRNIGBORO

DESIGN	DRAFT	CHECK
WTC	MA	EPC

IBI NO.: 141829

DATE: JUNE 23, 2023

SCALE:

SHEET TITLE: SITE DIMENSION PLAN

SHEET NO.: C200

Please note the P8 fixtures have been re-cataloged so we have included the equivalent fixture from the same manufacturer.

https://www.usaltg.com/products/asr/DSCP.html

Schedule

Label	QTY	Manufacturer	Catalog Number	Number Lamps	Lumens per Lamp	LLF	Notes
C7	2	LITECONTROL	3L-R-D-4-DRP-X-CX-35K-D120	1	4797	1	
P8-III-HS	1	U.S. ARCHITECTURAL LIGHTING	DSCPB22-VLED-III-48LED-700mA-WW-HS	48	158	1	
P8-IV-HS	3	U.S. ARCHITECTURAL LIGHTING	DSCPB22-VLED-IV-48LED-700mA-WW-HS	48	163	1	
P8-IV	2	U.S. ARCHITECTURAL LIGHTING	DSCPB22-VLED-IV-48LED-700mA-WW	48	213	1	
P8-V	2	U.S. ARCHITECTURAL LIGHTING	DSCPB22-VLED-VSQ-48LED-700mA-WW	48	224	1	

SUN VALLEY LIGHTING & U.S. ARCHITECTURAL LIGHTING

VLED AREA & ROADWAY LIGHTING

DEZINER SERIES 8

Mid Sized Neoclassical, Domed Bell Luminaire

Features

The NEW Dezīner Series is a flexible, configurable pedestrian scale decorative pendant luminaire with an 8.4" diameter upper housing of 0.125" thick formed aluminum with a large assortment of spun aluminum shades and ornamental options. Each lower housing is comprised of a 0.080" thick spun aluminum reflector with an integrated LED module seat, thermal management for long LED life and a thermally isolated solid state power supply chamber. Trulevel ™ ball coupling.

VLED™ Optics

Emitters (LED's) are arrayed on a metal core PCB panel with each emitter located on a copper thermal transfer pad and enclosed by an LED refractor. LED optics completely seal each individual emitter to meet an IP66 rating. In asymmetric distributions, a micro-reflector inside the refractor re-directs the house side emitter output towards the street side and functions as a house side shielding element. Refractors are injection molded H12 acrylic. Each LED refractor is sealed to the PCB over an emitter and all refractors are retained by an aluminum frame. Any one Panel, or group of Panels in a luminaire, have the same optical pattern. LED refractors produce standard site/area distributions. All optics are U0, Zero Uplight and are Dark Sky compliant. Panels are field replaceable and field rotatable in 90° increments.

LED Emitters

High Power White LED's are driven between 350mA and 875mA for a maximum output of 2.5 Watts nominal. LED's are available in standard Warm White (2700K & 3000K), Neutral White (4000K), or Cool White (5000K). All Standard LED's have a minimum of 70 CRI. Consult Factory for other LED options. Lumen Maintenance of L93 at 100,000 hours (TM-21 calculated at 6x Test Time) for all LED options.

True Amber LED's TRA-True Amber LED's emit light in the amber spectral bandwidth centered on 585-590nm. True Amber has negligible blue light and is suitable for wildlife.

LITECONTROL making light work™

3L-R-D

MOD™ 3 LED RECESSED DIRECT

FEATURES

- Variable Intensity technology provides a range of specifiable outputs and resulting fixture wattages
- 2 SDCM color consistency
- End cap design eliminates visible diffuser seams/gaps

See Certification Specifications

CONTROLS

NX DISTRIBUTED INTELLIGENCE SpectraSync

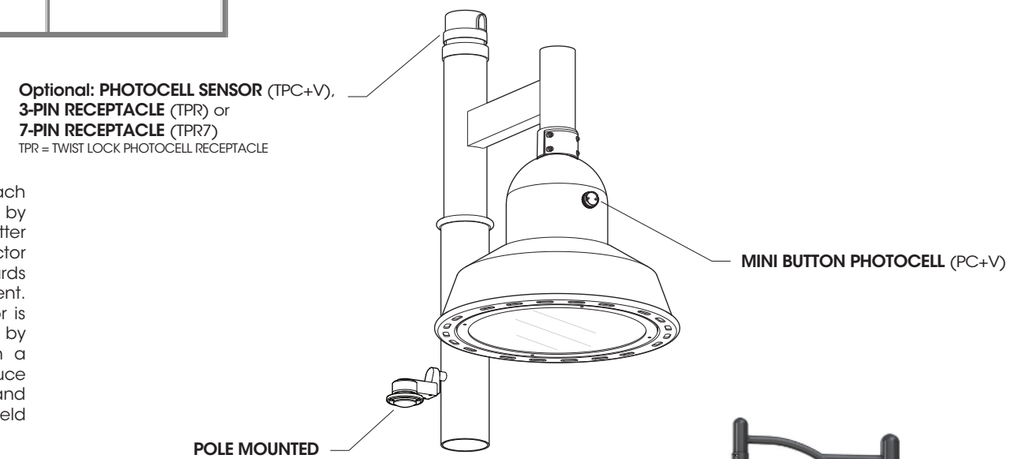

Factory Settings:
No Motion - 50%
Motion - 100%
Delay - 15 min.
Photocell - 75fc

Sensors can be Field Programmed With Bluetooth App

SUN VALLEY LIGHTING & U.S. ARCHITECTURAL LIGHTING

PROJECT NAME:

PROJECT TYPE:

VLED AREA & ROADWAY LIGHTING

DEZINER SERIES 8

Mid Sized Neoclassical, Domed Bell Luminaire

Features
The NEW Dezīner Series is a flexible, configurable pedestrian scale decorative pendant luminaire with an 8.4" diameter upper housing of 0.125" thick formed aluminum with a large assortment of spun aluminum shades and ornamental options. Each lower housing is comprised of a 0.080" thick spun aluminum reflector with an integrated LED module seat, thermal management for long LED life and a thermally isolated solid state power supply chamber. Trulevel ™ ball coupling.

VLED™ Optics
Emitters (LED's) are arrayed on a metal core PCB panel with each emitter located on a copper thermal transfer pad and enclosed by an LED refractor. LED optics completely seal each individual emitter to meet an IP66 rating. In asymmetric distributions, a micro-reflector inside the refractor re-directs the house side emitter output towards the street side and functions as a house side shielding element. Refractors are injection molded H12 acrylic. Each LED refractor is sealed to the PCB over an emitter and all refractors are retained by an aluminum frame. Any one Panel, or group of Panels in a luminaire, have the same optical pattern. LED refractors produce standard site/area distributions. All optics are U0, Zero Uplight and are Dark Sky compliant. Panels are field replaceable and field rotatable in 90° increments.

LED Emitters
High Power White LED's are driven between 350mA and 875mA for a maximum output of 2.5 Watts nominal. LED's are available in standard Warm White (2700K & 3000K), Neutral White (4000K), or Cool White (5000K). All Standard LED's have a minimum of 70 CRI. Consult Factory for other LED options. Lumen Maintenance of L93 at 100,000 hours (TM-21 calculated at 6x Test Time) for all LED options.

True Amber LED's TRA-True Amber LED's emit light in the amber spectral bandwidth centered on 585-590nm. True Amber has negligible blue light and is suitable for wildlife.

LED Driver
Constant current electronic with a power factor of >.90 and a minimum operating temperature of -40°F/-40°C. Driver(s) is/are UL and cUL recognized and mounted directly against the Electrical Housing to facilitate thermal transfer, held down by universal clamps to facilitate easy removal. In-line terminal blocks facilitate wiring between the driver and optical arrays. Drivers accept an input of 120-277V (UNV), 50/60Hz or 347V & 480V, 50,60Hz. 0 - 10V dimmable driver is standard. Driver has a minimum of 3KV internal surge protection. Luminaire supplied with 20KV surge protector for field accessible installation.)

Finish
Super TGIC polyester powder coating is applied onto a metal substrate this has been pretreated with a four-stage process for maximum adhesion and color retention. The top coat is baked at 400° F for maximum hardness and exterior durability.



DS8A
Angled



DS8C
Concave/Flared



DS8D
Deep Bell



DS8S
Skirted



DS8T
Tiered

The mid sized models within the Dezīner Series, offer 5 customizable styles available with unlit Bands.

U.L. Listed for Wet Location

2023163

U.S. Pole Company Inc
An Employee Owned Company
660 West Avenue O, Palmdale, CA 93551
Phone (661) 233-2000 www.usaltg.com

MADE IN THE USA

PRODUCT CONFIGURATIONS

EPA & WEIGHT

Base Model	w/ unlit Bands
	
DS8A Max Weight = 23 lbs Max EPA = 0.84 80 LED Max	**DS8AB** Max Weight = 24 lbs Max EPA = 0.85 80 LED Max
	
DS8C Max Weight = 23 lbs Max EPA = 0.81 80 LED Max	**DS8CB** Max Weight = 24 lbs Max EPA = 0.82 80 LED Max
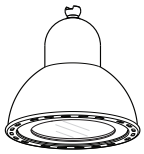	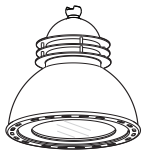
DS8D Max Weight = 24 lbs Max EPA = 1.12 80 LED Max	**DS8DB** Max Weight = 25 lbs Max EPA = 1.13 80 LED Max
	
DS8S Max Weight = 26 lbs Max EPA = 1.19 80 LED Max	**DS8SB** Max Weight = 27 lbs Max EPA = 1.20 80 LED Max
	
DS8T Max Weight = 22 lbs Max EPA = 0.86 80 LED Max	**DS8TB** Max Weight = 23 lbs Max EPA = 0.87 80 LED Max

VLED™ MODULES

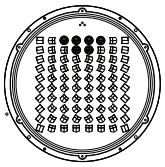

80 LED Module

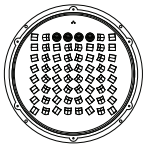

64 LED Module

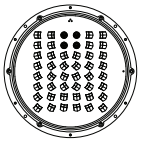

48 LED Module

SUN VALLEY LIGHTING & U.S. ARCHITECTURAL LIGHTING

DEZINER SERIES 8 - VLED MID SIZED

ORDERING INFORMATION

Spec/Order Example: DS8D/VLED-II/80LED-525mA/40K/347/2-90/RAL-9003-S/TPR

Luminaire	Shade	Optics	# of LEDs	Drive Current	Color Temp - CCT	Voltage

Luminaire

- ☐ **DS8**

Shade

- ☐ Angled **A**
- ☐ Angled w/ unlit Bands **AB**
- ☐ Concave/Flared **C**
- ☐ Concave/Flared w/ unlit Bands **CB**
- ☐ Deep Bell **D**
- ☐ Deep Bell w/ unlit Bands **DB**
- ☐ Hooded **H**
- ☐ Hooded w/ unlit Bands **HB**
- ☐ Skirted **S**
- ☐ Skirted w/ unlit Bands **SB**
- ☐ Tiered **T**
- ☐ Tiered w/ unlit Bands **TB**

Optics

VLED™ Distribution Type

- ☐ **VLED-II**
- ☐ **VLED-III**
- ☐ **VLED-IV**
- ☐ **VLED-V-SQ-M**

LED

# of LEDs	Drive Current	Color Temp - CCT
☐ **80LED**	☐ **700mA**[1]	☐ **27K** (2700K)
☐ **64LED**	☐ **525mA**	☐ **30K** (3000K)
☐ **48LED**	☐ **350mA**	☐ **40K** (4000K)
		☐ **50K** (5000K)
		☐ **TRA**[2] True Amber

NOTES:

1 - 700mA drive current available in 64LED and 48LED only

2- TRA available in 350mA & 525mA Drive Currents only

Consult factory for other CCT, CRI, & Drive Current options

Voltage

- ☐ **UNV** (120-277)
- ☐ **347**
- ☐ **480**

Mounting	Finish	Options

Mounting

Arm Mount

- ☐ **1**
- ☐ **2-180**
- ☐ **2-90**
- ☐ **3-90**
- ☐ **3-120**
- ☐ **4-90**

Wall Mount

- ☐ **WM**

WM - Wall Mount provided with mounting bracket and cover.

Pendant Mount

- ☐ Stem Mount + Length(in) (48" Max) **SM+L**
- ☐ Chain Mount + Length(in) (48" Max) **CM+L**
- ☐ Cable Clamp J-Box **CCB**
- ☐ Cross Cable Clamp J-Box **CCC**

Finish

Standard Textured Finish

- ☐ Black **RAL-9005-T**
- ☐ White **RAL-9003-T**
- ☐ Grey **RAL-7004-T**
- ☐ Dark Bronze **RAL-8019-T**
- ☐ Green **RAL-6005-T**

Premium Finishes

- ☐ Rust
- ☐ Patina Copper **PC**

For smooth finish replace suffix "T" with suffix "S" (Example: RAL-9500-S)

Consult factor for custom colors

Options

- ☐ Internal House Side Shield incl. LED Count (Example: HS-VLED/48) **HS-VLED**
- ☐ Twist Lock Receptable Only **TPR**
- ☐ 7-Pin Twist Lock Receptable Only **TPR7**
- ☐ High-Low Dimming for Switch by Others/Select Levels 50/100 or 25/100 (Example: HLSW/25) **HLSW**
- ☐ Twist Lock Photocell + Voltage (Example: TPC347V) **TPC+V**
- ☐ Photocell + Voltage (Example: PC120V) **PC+V**
- ☐ Single Fuse (Example: DF277V) **SF+V**
- ☐ Double Fuse (Example: DF240V) **DF+V**
- ☐ Blue-Tooth Programmable Photo/Motion Sensor (Factory - Motion 50/100; Photo 75fc) **MS-F311**

DEZĪNER SERIES 8 - VLED MID SIZED

SAMPLE ASSEMBLIES

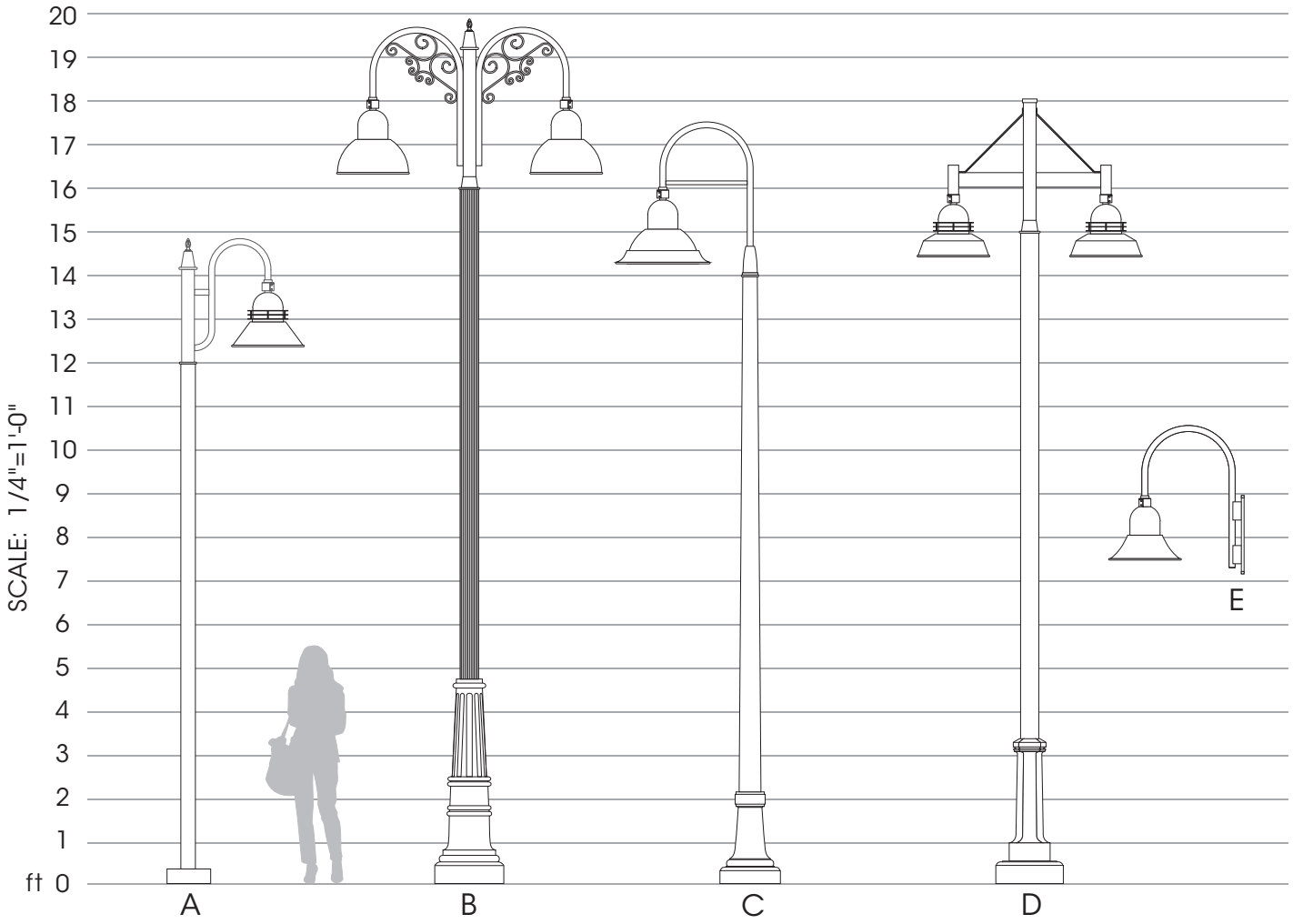

A. RNTA-124-125/XPJ-1/DS8AB/LED/ACCESSORIES/FINISH

B. 36-1070-16'-0"/XPC-2-180/DS8D/LED/ACCESSORIES/FINISH

C. 75-1046T-14'-0"/XPS-1/DS8S/LED/ACCESSORIES/FINISH

D. 11-1050-15'-0"/XAS-2-180/DS8TB/LED/ACCESSORIES/FINISH

E. XPL-WM/DS8C/LED/ACCESSORIES/FINISH

Sample Assemblies show a small offering of the Sun Valley Line of Poles, Bases, Shafts, Arms, & Luminaires. Please visit usaltg.com for the full product offering.

OPTIONS

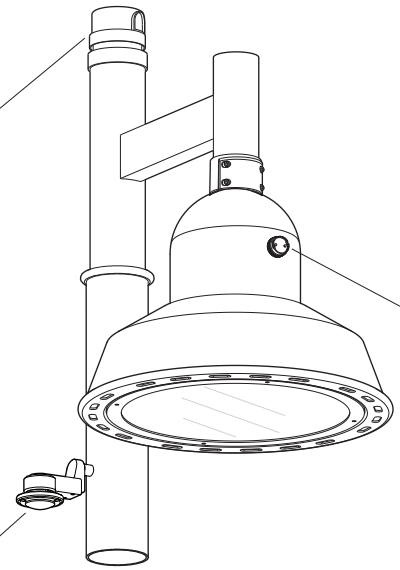

Optional: PHOTOCELL SENSOR (TPC+V),
3-PIN RECEPTACLE (TPR) or
7-PIN RECEPTACLE (TPR7)
TPR = TWIST LOCK PHOTOCELL RECEPTACLE

MINI BUTTON PHOTOCELL (PC+V)

POLE MOUNTED
MFS-311BLUETOOTH
PHOTO/MOTION SENSOR

Factory Settings:
No Motion - 50%
Motion - 100%
Delay - 15 min.
Photocell - 75fc

Sensors can be Field Programmed With Bluetooth App

High Low Dimming For Switches (HLSW)
The HLSW is a Small Electronic Switch which Provides High Low Dimming Control Through the LED Driver's 0-10V Control. Switching is Done by Adding a Seconday AC Switched Hot Trigger Line to the HLSW in Addition to the Normal AC Power Line. When the Secondary Trigger Line is Powered, the Fixture will go to 100% Dimming. With no Power to the Trigger, the Fixture will operate at 50% or 25% Dimming. Switches for the Trigger Line can be a Normal AC Switch/Breaker or Timed Switch/Breaker.

Wireless and Other Fixture Controls
Contact Factory for Wireless and Other Fixture Controls and Recomendations. Most Controls Can be Integrated and Factory Installed.

INSTALLATION DETAIL

Trulevel System® Assembly

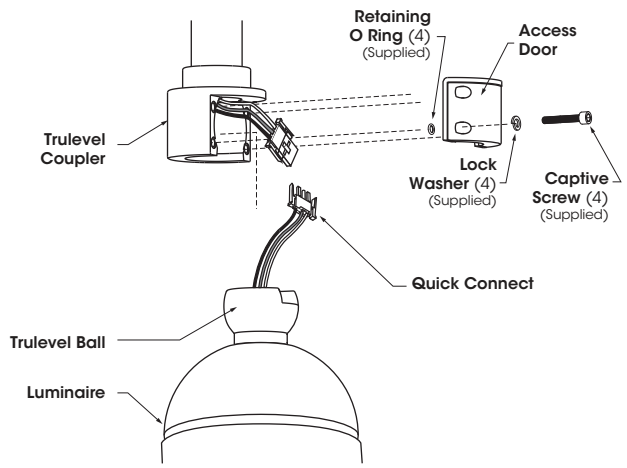

1. Loosen (4) Captive Screws and remove Access Door from Trulevel Coupler, pull out Quick Connect from Trulevel Coupler and Trulevel Ball.

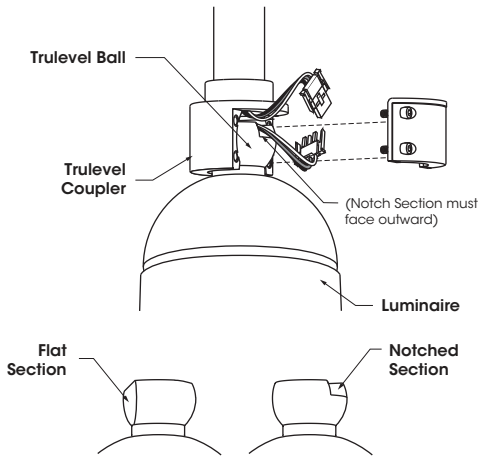

2. Place Trulevel Ball inside of Trulevel Coupler as illustrated.

   A - Notched Section of Trulevel Ball must face outward as illustrated.

   B - Flat Section of Trulevel Ball must face inward.

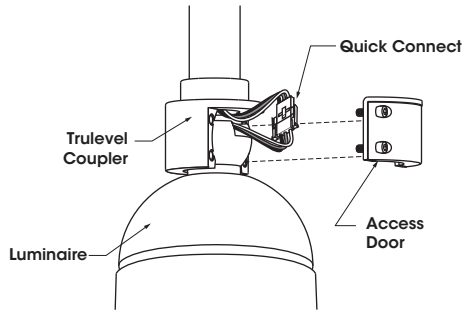

3. Connect Quick Connect components, push components inside of Trulevel Coupler cavity, replace Access Door and loosely secure, do not tighten.

   Fixture will suspend without Access Door during installation.

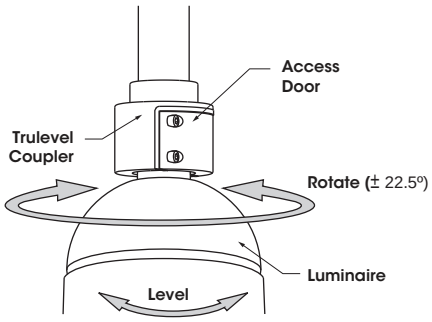

4. Rotate (left to right ± 22.5°) and level Luminaire to desired position. Tighten Access Door.

   (Tighten each bolt to recommended torque: **10 ft-lb, foot-pound**)

   Trulevel Pendant Mount is intended to allow for fixture leveling, but is not intended to be "free-swinging" upon proper installation.

ELECTRICAL DATA GUIDE - AMPERAGE CHART

# of LEDs	mA	System Watts	120V	208V	277V	347V	480V
48	350	53.0	0.44	0.25	0.19	0.15	0.11
48	525	77.0	0.64	0.37	0.28	0.22	0.16
48	700	103.0	0.86	0.50	0.37	0.30	0.21
64	350	69.0	0.58	0.33	0.25	0.20	0.14
64	525	100.0	0.83	0.48	0.36	0.29	0.21
80	350	87.0	0.73	0.42	0.31	0.25	0.18
80	525	130.0	1.08	0.63	0.47	0.37	0.27

ELECTRICAL DATA GUIDE - LM-80 LUMEN MAINTENANCE

LED LUMEN MAINTENANCE		
LED Life / Operating Hours	Lumen Depreciation	Lumen Depreciation Scale Factor
60,000	L96	0.96x
100,000 (6X LED Test Hrs)	L93	0.93x
150,000 (Theoretical)	L89	0.90x
200,000 (Theoretical)	L86	0.87x

TM-21 6x Test Time Dicatates that L93 > 100,000 Hours.

Lumen Depreciation Calculations Done in Accordance With IESNA TM-21 & LM-80 (25°C Ambient)

PHOTOMETRIC DATA GUIDE - LUMEN TABLES

DS8-VLED																		
LED Count	Drive Current (mA)	System Watts	Dist'n Type	27K (2700K - 70CRI)			30K (3000K - 70CRI)			40K (4000K - 70CRI)			50K (5000K - 70CRI)			System Watts	TRA (590nm)		
				LUMENS	LPW	BUG RATING	LUMENS	LPW	BUG RATING	LUMENS	LPW	BUG RATING	LUMENS	LPW	BUG RATING		LUMENS	LPW	BUG RATING
48	350	53.0	II	5486	104	B1-U0-G2	5923	112	B1-U0-G2	6234	118	B1-U0-G2	6546	124	B2-U0-G2	40.7	1871	46	B1-U0-G1
			III	5429	102	B1-U0-G2	5860	111	B1-U0-G2	6169	116	B1-U0-G2	6478	122	B1-U0-G2		1851	45	B1-U0-G1
			IV	5502	104	B1-U0-G2	5940	112	B1-U0-G2	6253	118	B1-U0-G2	6565	124	B1-U0-G2		1876	46	B0-U0-G1
			VSQ	5771	109	B3-U0-G1	6230	118	B3-U0-G1	6558	124	B3-U0-G1	6886	130	B3-U0-G1		1968	48	B1-U0-G1
			II-HS	4108	78	B1-U0-G1	4435	84	B1-U0-G2	4668	88	B1-U0-G2	4902	92	B1-U0-G2		1401	34	B0-U0-G1
			III-HS	4068	77	B1-U0-G1	4391	83	B1-U0-G2	4623	87	B1-U0-G2	4854	92	B1-U0-G2		1387	34	B0-U0-G1
			IV-HS	4213	79	B1-U0-G2	4549	86	B1-U0-G2	4788	90	B1-U0-G2	5027	95	B1-U0-G2		1437	35	B0-U0-G1
48	525	77.0	II	7554	98	B2-U0-G2	8155	106	B2-U0-G2	8584	111	B2-U0-G2	9014	117	B2-U0-G2	59.4	2172	37	B1-U0-G1
			III	7475	97	B1-U0-G2	8069	105	B2-U0-G2	8494	110	B2-U0-G2	8919	116	B2-U0-G2		2149	36	B1-U0-G1
			IV	7578	98	B1-U0-G2	8181	106	B1-U0-G2	8612	112	B1-U0-G2	9042	117	B2-U0-G2		2179	37	B1-U0-G1
			VSQ	7947	103	B3-U0-G1	8579	111	B3-U0-G1	9031	117	B3-U0-G1	9482	123	B3-U0-G1		2285	38	B1-U0-G1
			II-HS	5656	73	B1-U0-G2	6106	79	B1-U0-G2	6427	83	B1-U0-G2	6748	88	B2-U0-G2		1626	27	B1-U0-G1
			III-HS	5602	73	B1-U0-G2	6048	79	B1-U0-G2	6366	83	B1-U0-G2	6684	87	B1-U0-G2		1611	27	B0-U0-G1
			IV-HS	5800	75	B1-U0-G2	6261	81	B1-U0-G2	6591	86	B1-U0-G2	6921	90	B1-U0-G2		1667	28	B0-U0-G1
48	700	103.0	II	9460	92	B2-U0-G2	10212	99	B2-U0-G2	10750	104	B2-U0-G2	11287	110	B2-U0-G2	N/A	N/A		
			III	9359	91	B2-U0-G2	10103	98	B2-U0-G2	10635	103	B2-U0-G2	11167	108	B2-U0-G2				
			IV	9487	92	B2-U0-G2	10242	99	B2-U0-G2	10781	105	B2-U0-G2	11320	110	B2-U0-G2				
			VSQ	9950	97	B3-U0-G2	10742	104	B3-U0-G2	11307	110	B3-U0-G2	11872	115	B3-U0-G2				
			II-HS	7081	69	B2-U0-G2	7644	74	B2-U0-G2	8047	78	B2-U0-G2	8449	82	B2-U0-G2				
			III-HS	7014	68	B1-U0-G2	7572	74	B1-U0-G2	7971	77	B1-U0-G2	8369	81	B1-U0-G2				
			IV-HS	7262	71	B1-U0-G2	7840	76	B1-U0-G2	8252	80	B1-U0-G2	8665	84	B1-U0-G2				
64	350	71.0	II	7315	103	B2-U0-G2	7897	111	B2-U0-G2	8312	117	B2-U0-G2	8728	123	B2-U0-G2	54.4	2494	46	B1-U0-G1
			III	7238	102	B1-U0-G2	7813	110	B1-U0-G2	8225	116	B1-U0-G2	8636	122	B2-U0-G2		2468	45	B1-U0-G1
			IV	7338	103	B1-U0-G2	7921	112	B1-U0-G2	8338	117	B1-U0-G2	8755	123	B2-U0-G2		2502	46	B1-U0-G1
			VSQ	7696	108	B3-U0-G1	8308	117	B3-U0-G1	8745	123	B3-U0-G1	9183	129	B3-U0-G1		2624	48	B1-U0-G1
			II-HS	5476	77	B1-U0-G2	5911	83	B1-U0-G2	6223	88	B1-U0-G2	6534	92	B1-U0-G2		1867	34	B1-U0-G1
			III-HS	5425	76	B1-U0-G2	5856	82	B1-U0-G2	6165	87	B1-U0-G2	6473	91	B1-U0-G2		1850	34	B0-U0-G1
			IV-HS	5617	79	B1-U0-G2	6064	85	B1-U0-G2	6383	90	B1-U0-G2	6702	94	B1-U0-G2		1915	35	B0-U0-G1
64	525	102.0	II	10075	99	B2-U0-G2	10877	107	B2-U0-G2	11449	112	B2-U0-G2	12022	118	B2-U0-G2	79.3	2897	37	B1-U0-G1
			III	9966	98	B2-U0-G2	10759	105	B2-U0-G2	11325	111	B2-U0-G2	11891	117	B2-U0-G3		2865	36	B1-U0-G1
			IV	10104	99	B2-U0-G2	10907	107	B2-U0-G2	11481	113	B2-U0-G2	12055	118	B2-U0-G3		2905	37	B1-U0-G1
			VSQ	10597	104	B3-U0-G2	11440	112	B3-U0-G2	12042	118	B3-U0-G2	12644	124	B3-U0-G2		3046	38	B2-U0-G1
			II-HS	7541	74	B2-U0-G2	8141	80	B2-U0-G2	8569	84	B2-U0-G2	8998	88	B2-U0-G2		2168	27	B1-U0-G1
			III-HS	7469	73	B1-U0-G2	8063	79	B1-U0-G2	8488	83	B1-U0-G2	8912	87	B1-U0-G2		2147	27	B0-U0-G1
			IV-HS	7734	76	B1-U0-G2	8349	82	B1-U0-G2	8789	86	B1-U0-G2	9228	90	B1-U0-G2		2224	28	B0-U0-G1
80	350	87.0	II	8605	99	B2-U0-G2	9289	107	B2-U0-G2	9778	112	B2-U0-G2	10267	118	B2-U0-G2	66.1	2934	44	B1-U0-G1
			III	8514	98	B2-U0-G2	9191	106	B2-U0-G2	9675	111	B2-U0-G2	10159	117	B2-U0-G2		2903	44	B1-U0-G1
			IV	8631	99	B1-U0-G2	9317	107	B2-U0-G2	9808	113	B2-U0-G2	10298	118	B2-U0-G2		2943	45	B1-U0-G1
			VSQ	9052	104	B3-U0-G1	9772	112	B3-U0-G2	10286	118	B3-U0-G2	10801	124	B3-U0-G2		3086	47	B2-U0-G1
			II-HS	6442	74	B1-U0-G2	6954	80	B2-U0-G2	7320	84	B2-U0-G2	7686	88	B2-U0-G2		2196	33	B1-U0-G1
			III-HS	6381	73	B1-U0-G2	6889	79	B1-U0-G2	7252	83	B1-U0-G2	7614	88	B1-U0-G2		2176	33	B1-U0-G1
			IV-HS	6606	76	B1-U0-G2	7132	82	B1-U0-G2	7507	86	B1-U0-G2	7882	91	B1-U0-G2		2252	34	B0-U0-G1
80	525	127.0	II	11730	92	B2-U0-G2	12663	100	B2-U0-G2	13330	105	B3-U0-G3	13996	110	B3-U0-G3	97.5	3372	35	B1-U0-G1
			III	11606	91	B2-U0-G2	12529	99	B2-U0-G2	13189	104	B2-U0-G3	13848	109	B2-U0-G3		3337	34	B1-U0-G1
			IV	11766	93	B2-U0-G3	12701	100	B2-U0-G3	13370	105	B2-U0-G3	14038	111	B2-U0-G3		3382	35	B1-U0-G1
			VSQ	12340	97	B3-U0-G2	13322	105	B3-U0-G2	14023	110	B4-U0-G2	14724	116	B4-U0-G2		3548	36	B2-U0-G1
			II-HS	8781	69	B2-U0-G2	9480	75	B2-U0-G2	9979	79	B2-U0-G2	10477	82	B2-U0-G2		2525	26	B1-U0-G1
			III-HS	8699	68	B1-U0-G2	9391	74	B1-U0-G2	9885	78	B2-U0-G2	10379	82	B2-U0-G2		2501	26	B1-U0-G1
			IV-HS	9007	71	B1-U0-G2	9723	77	B1-U0-G2	10235	81	B1-U0-G2	10747	85	B1-U0-G3		2589	27	B0-U0-G1

IES File downloads for this product can be found at www.usaltg.com/downloads/asr.html

LITECONTROL
making light work™

DATE: LOCATION:

TYPE: PROJECT:

CATALOG #:

3L-R-D

MOD™ 3 LED RECESSED DIRECT

MODx

FEATURES

- Variable Intensity technology provides a range of specifiable outputs and resulting fixture wattages
- 2 SDCM color consistency
- End cap design eliminates visible diffuser seams/gaps

DLC DLC PLUS LISTED™

BUY AMERICAN SOLUTIONS

See Certification Specifications

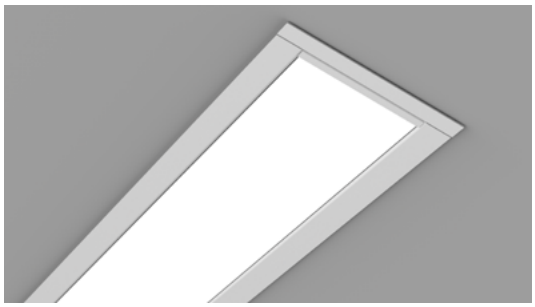

CONTROLS

NX DISTRIBUTED INTELLIGENCE™ SpectraSync™ Color Tuning Technology

RELATED PRODUCTS

2L-R-D 4L-R-D 6L-R-D

SERVICE PROGRAMS

QS

SPECIFICATIONS

CONSTRUCTION

- Housing contructed from die-formed and welded steel with wiring knockouts in top
- End caps constructed from die-formed steel. Installs from below via magnetic interface
- End caps overlap diffuser at each fixture end to elimate gaps and LED visibility

OPTICAL PERFORMANCE

- 2 SDCM color consistency, 80 or 90 CRI
- SOF: Soft diffuse acrylic lens
- REG: ½" regressed softglo lens with painted steel inserts. Output multiplier (.77)
- ASYM: Asymmetric Highly transmissive diffuse acrylic lens with linear prisms
- BAT: "Batwing" distribution created created from highly transmissive diffuse acrylic lens with linear prisms
- DRP: 1/2" protruding soft diffuse "drop" lens

INSTALLATION

- PT Mounting: Continuous spackle trim with beaded edge welded to housing. Spackle trim allows plaster coat up to fixture edge for clean ceiling appearance
- LG/NG/SS Mounting: Side rails provide continuous mounting, lateral spacing between T-bars and allows clearance for T-bar supporting wire. For Tegular grid mount, fixture will sit level with the T-bar
- DW Mounting: Side rails allow installation into drywall slot. Visible flange is located on all 4 sides of fixture

INSTALLATION (CONTINUED)

- Illuminated corners available in 90°, 120°, 135°. One piece construction, ready to install, with diffusers that match adjoining fixtures. Corner system connectors must be used to form patterns. The length of each outside or inside illuminated corner is 12"
- Fixture weight: 3lbs/ft

ELECTRICAL

- Variable Intensity (VI) technology allows precise specification of fixture output/ wattage. Fixture will be programmed and labeled to specification. Indirect and direct hemispheres can be independently specified
- LED boards and drivers can be accessed and removed from fixture, while installed
- Entire LED module can be removed and replaced
- 1C (1 Circuit) Fixture wired for a single circuit
- Emergency Battery: 10W battery powered driver. Provides a minimum of 90 minutes of emergency lighting. Inverter-Compatible. Provided by others. Available in 4'+' fixtures

CONTROLS

- Sensors install between diffusers
- NX Distributed Intelligence™: Supports indoor and outdoor applications, wired, wireless and hybrid networked NX lighting control deployments and enabled emerging applications, such as Hubbell Lighting's SpectraSync™ Color Tuning Technology
- SpectraSync™ Color Tuning Technology: Control your space based on the needs of the application, specific activities throughout the day and preferences of the occupants

CERTIFICATIONS

- DLC® (DesignLights Consortium) Qualified - see www.designlights.org
- CSA listed for damp location
- IBEW
- AF of L
- UL924
- This product qualifies as a “designated country construction material” per FAR 52.225-11 Buy American-Construction. Materials under Trade Agreements effective 8/14/2020. See Buy American Solutions. Contact factory for configurations including SpectraSync, NX, or sensors.

WARRANTY

- LED boards - 5 years
- LED drivers (standard) - 5 years
- LED drivers (Lutron) - 3 years
- See www.litecontrol.com for details

KEY DATA	
Lumen Range Per Foot	D: 300–1100
Wattage Range Per Foot	2.6–10.1
Efficacy Range (LPW)	109–116
Rated Life (Hours)	L70: >61,000 L90: >61,000

© 2022 Litecontrol a division of Hubbell Lighting, Inc. Specifications subject to change without notice.
65 Spring Street Plympton, MA 02367 / Tel 781.294.0100 / Website www.litecontrol.com

HUBBELL Lighting

LITECONTROL
making light work™

DATE: LOCATION:

TYPE: PROJECT:

CATALOG #:

= Service Program

Click icon for a list of Quick-Ship options

3L-R-D

MOD™ 3 LED RECESSED DIRECT

ORDERING GUIDE

Example: 2L-DW-D-8-.3-08-SOF-C1-27K-D030-D01-1C-UNV

CATALOG #

3L –

Series		Ceiling Type [1]		Fixture Distribution		Row Length (In Feet)		Row Length Adder [2]		Max Length in Row		Direct Optical Distribution	
3L	MOD	DW	Drywall	D	Direct	__'	Enter in foot increments	.3	Row length +3"	02	2', 609 mm	SOF	Soft Diffuse Lens, Lambertian
		PT	Drywall with plaster trim (trimless finish)	AD	Asymmetric Direct			.6	Row length +6"	03	3', 914 mm	REG	Regressed Diffuse Lens [3]
		LG	15/16 Grid					.9	Row length +9"	04	4', 1219 mm	ASYM	Asymmetric Diffuse Lens [3, 4]
		NG	9/16 Grid						Measured in inches	05	5', 1524 mm	BAT	Batwing Lens
		SS	9/16 Screw Slot							06	6', 1829 mm	DRP	Drop Lens [3, 5]
										08	8', 2438 mm		

–

Finish/Color [6]		Color Temperature		Direct Output/ft [8]		Driver		Circuiting		Voltage	
C1	Matte White (Default)	27K	2700K [5]	D030	300 (min) [9]	D01	1% Dimming, 0-10V	1C	1 Circuit	UNV	Universal Voltage (120V through 277V)
C2	Textured Matte White	30K	3000K		*to*	D00	1% Dim-to-Off, 0-10V			347	347 Volt [5, 11]
C3	Light Silver	35K	3500K	D125	1250 (max)	D05	SpectraSync 5% Dimming, 0-10V [10]				
C4	Machined Aluminum	40K	4000K			DS1	1% Dimming w/ Soft Start, 0-10V				
C5	Carbon Black	50K	5000K [5]			DS0	1% Dim-to-Off w/ Soft Start, 0-10V				
C6	Textured Camera Black	27K9	2700K, 90 CRI [5]			LEC	Hi-lume 1% Ecosystem LED Driver				
CC	Custom Color	30K9	3000K, 90 CRI			DALI	DALI [5]				
		35K9	3500K, 90 CRI			DALIP	Powered by DALI (2.0) [5]				
		40K9	4000K, 90 CRI			NDM	Non-Dimming				
		50K9	5000K, 90 CRI [5]								
		2230TD	2200K-3000K SpectraSync™ Dim-to-Warm [7]								
		2750T	2700K-5000K SpectraSync™ Tunable White [7]								
		2765T	2700K-6500K SpectraSync™ Tunable White [7]								

OPTIONAL

Nightlight		Emergency		Thru-wiring		Patterns [5, 14]		Chicago Enviromental Air Modification	
NL	Nightlight Circuit Required. Enter quantity. 2NL = 2 nightlight circuits/row	EF	10W Emergency Battery Pack. Enter quantity. 2EF = 2 emergency batteries/row. [12]	W1	No Thru Wire	C90L	Illuminated 90° Corner	CCEA	Chicago Environmental Air Modification
				W2	Provide Normal and Emergency/ Nightlight Thru Wiring [13]	C120L	Illuminated 120° Corner		
				W3	Provide Normal Thru Wiring Only	C135L	Illuminated 135° Corner		

Control Options [5]	
NX Standalone	
NXS	NX, PIR BT Occupancy/Daylight Sensor, Slide Mount [15, 16, 17]
NX Networked – Wired	
NXE	NX, Dual SmartPorts [15, 16]
NXES	NX, PIR BT Occupancy/Daylight Sensor, Slide Mount, Dual SmartPORTs [15, 16]
NX Networked – Wireless	
NXSW	NX Wireless, PIR BT Occupancy/Daylight Sensor [15, 16, 17]
NXWE	NX Wireless Wireless Enabled [15, 16]
NX Networked – Wired/Wireless	
NXSWD	NX Wireless, PIR BT Occupancy/Daylight Sensor, Dual SmartPORTs [15, 16, 17]
NXWD	NX Wireless, Dual Smart Ports [15, 16]
Sensors	
SD1	Daylight Sensor Required. Enter quantity. 2SD1 = 2 daylight sensors/row
SO1	Occupancy Sensor Required. Enter quantity. 2SO1 = 2 occupancy sensors/row
SZ1	Zigbee Radio Module Required. Enter quantity. 2SZ1=2 radio modules/row. Radio controls up to 10 drivers. Must be ordered with D00.

Notes:

1 Ceiling type can not be retrofitted in the field.
2 Excludes individual grid mounts.
3 Not Available with Patterns.
4 Must be ordered with IAD.
5 Additional lead time may be applicable. Contact factory.
6 Visit www.litecontrol.com/finishes for details.
7 Must be ordered with D05 Driver option; excludes 2' lengths and patterns.
8 Specifiable in 50 lumen increments. Reference the Performance Data Table for full performance offering and exceptions.
9 D030 not available in 2'
10 Must be ordered with 2230TD, 2750T or 2765T Option
11 Excludes Emergency Battery Pack 'EF' Option. Excludes DALI, DALIP and Lutron (LEC) Dimming Drivers
12 EF - 10W battery powered driver. Provides a minimum of 90 minutes of emergency lighting. Inverter-Compatible. Provided by others.
13 Only applicable when specified with Emergency/Nightlight.
14 Contact Factory for pattern configurations. Approval drawings required.

NX In-Fixture Control Options:

15 Not available for row mounting. Only available with 0-10V Driver options. Contact factory for Length restrictions.
16 Refer to NX Integrated Controls Reference Table for Functionality of Options.
17 NX Sensors with Bluetooth, BLE, provides remote commission only.

© 2022 Litecontrol, a division of Hubbell Lighting, Inc. Specifications subject to change without notice.
65 Spring Street Plympton, MA 02367 / Tel 781.294.0100 / Website www.litecontrol.com

HUBBELL Lighting

DATE: LOCATION:

TYPE: PROJECT:

CATALOG #:

3L-R-D

MOD™ 3 LED RECESSED DIRECT

CONTROLS

NX DISTRIBUTED™ INTELLIGENCE

NX Distributed Intelligence™ Lighting Controls:

Supports both indoor and outdoor applications in a variety of deployment options- wired, wireless, hybrid.
Integrates with and enables a wide array of luminaires including those with SpectraSync Color Tuning Technology.

NX INTEGRATED CONTROLS REFERENCE								
NX Option	Sensor	Networkable	Scheduling	Occupancy	Daylight Harvesting	0–10V Dimming	On/off Control	Bluetooth® App Programming
NX Standalone								
NXS	NXSMP-SMI	No	Yes	Yes	Yes	Yes	Yes	Yes
NX Networked – Wired								
NXE	N/A	Yes	Yes	No	No	Yes	Yes	Requires NXBTC/R [1]
NXES	NXSMP-SMI	Yes	Yes	Yes	Yes	Yes	Yes	Yes
NX Networked – Wireless								
NXSW	NXSMP-SMI	Yes	Yes	Yes	Yes	Yes	Yes	Yes
NXWE [2]	N/A	Yes	Yes	No	No	Yes	Yes	No [3]
NX Networked – Wired/Wireless								
NXSWD	NXSMP-SMI	Yes	Yes	Yes	Yes	Yes	Yes	Yes
NXWD	N/A	Yes	Yes	No	No	Yes	Yes	Requires NXBTC/R [1,3]

1 NXBTC/R needs to be plugged into an available NX SmartPort™ on the fixture network
2 Programming via App requires factory assistance
3 To program NXWE option, need to consult factory. If connected to an area controller, programming can be done from that

SpectraSync™ Color Tuning Technology:

Control your space based on the needs of the application, specific activities throughout the day and preferences of the occupants with distinct SpectraSync™ Color Tuning Technologies.

SpectraSync™ Color Tuning Technology

SPECTRASYNC COLOR TUNING TECHNOLOGY		
Mode	Kelvin Range	Description
Dim to Warm	2200K-3000K	Mimics the familiar warming effect that occurs with traditional incandescent sources as they are dimmed
Tunable White	2700K-5000K 2700K-6500K	Offers users the ability to tailor CCT to their personal preference, enhancing task visibility, material and colors or the aesthetics of the space
Scheduled White	2700K-5000K 2700K-6500K	Mimics the rhythm of natural light or follows an alternative user-defined schedule throughout the day, enhancing an occupant's mood and well-being

SpectraSync Tunable White

Available in two options: 2750T (2700K–5000K) or 2765T (2700K–6500K).
Requires two 0–10V controllers, one for intensity and one for CCT.
Minimum 5% dimming.

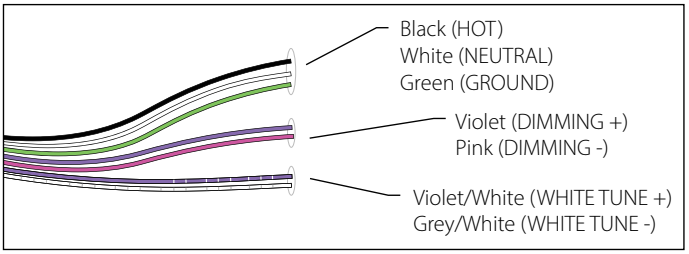

SpectraSync Tunable White luminaires are provided with two 0–10V circuits. The violet and pink circuit is for wiring to any qualified 0–10V controller for dimming. The violet/white and grey/white circuit is for wiring to any qualified 0–10V controller for Tunable White CCT control.

Controller Manufacturer Data

SpectraSync Tunable White was designed to be used with sinking style dimmers (provided by others) and is compatible with:

- Hubbell Control Solutions (HCS): NX Distributed Intelligence™ Room Controllers (NXRC) and In-fixture Controllers (NXFM)
- Lutron: DVTV, DVSTV, and NFTV dimmers
- Wattstopper: ADF120277 and CD4BL (Titan) dimmers

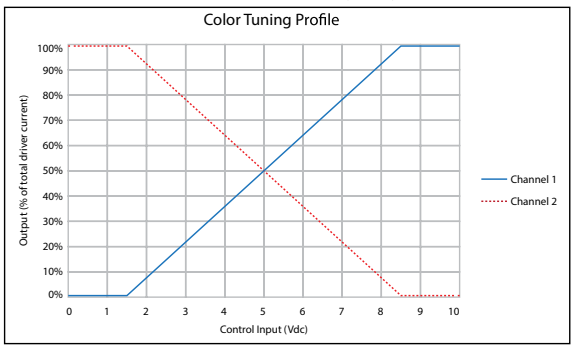

NX Design & Application Guide
NX Brochure
SpectraSync
NX Solutions Guide

© 2022 Litecontrol, a division of Hubbell Lighting, Inc. Specifications subject to change without notice.
65 Spring Street Plympton, MA 02367 / Tel 781.294.0100 / Website www.litecontrol.com

HUBBELL Lighting

LITECONTROL
making light work™

DATE: LOCATION:

TYPE: PROJECT:

CATALOG #:

3L-R-D

MOD™ 3 LED RECESSED DIRECT

PERFORMANCE DATA TABLE

The table below shows the delivered lumens for the various lumen outputs. Use this chart in connection with the output multiplier capability to deliver any output required.

Nomenclature	Lumens/Ft	W/Ft	Efficacy
Downlight			
D030 (min)	300	2.6	116
D035	350	3.0	116
D040	400	3.4	116
D045	450	3.9	116
D050	500	4.3	116
D055	550	4.8	115
D060	600	5.2	115
D065	650	5.7	113
D070	700	6.2	113
D075	750	6.6	112
D080	800	7.1	112
D085	850	7.6	111
D090	900	8.1	111
D095	950	8.6	110
D100	1000	9.1	110
D105	1050	9.6	109
D110	1100	10.1	109

(wattage may vary up to 5% from published)

Output Restrictions

Driver options listed below are not available for the output and length as shown.

Restrictions - Direct		Output LPA				
		300	350	400	450	500
Length (feet)	2	LEC, DALI, 347V	LEC, DALI, 347V	DALI, 347V	DALI, 347V	DALI, 347V
	3	DALI, 347V	DALI, 347V			

Output Multiplier Table

Photometrics for the 4L are published here at a nominal 3500K temperature. This table may be used to approximate the lumen values at different Kelvin temperatures. Power consumption would stay the same.

Option	2700K	3000K	3500K	4000K	5000K	2700K 90 CRI	3000K 90 CRI	3500K 90 CRI	4000K 90 CRI	5000K 90 CRI
SOF	0.95	0.98	1.00	1.03	1.05	0.83	0.85	0.88	0.90	0.93
REG	0.73	0.75	0.77	0.79	0.81	0.64	0.65	0.68	0.69	0.72
ASYM	0.95	0.98	1.00	1.03	1.05	0.83	0.85	0.88	0.90	0.93
BAT	0.95	0.98	1.00	1.03	1.05	0.83	0.85	0.88	0.90	0.93
DRP	0.95	0.98	1.00	1.03	1.05	0.83	0.85	0.88	0.90	0.93
LPAD	0.86	0.88	0.90	0.93	0.95	0.75	0.77	0.79	0.81	0.84

© 2022 Litecontrol, a division of Hubbell Lighting, Inc. Specifications subject to change without notice.
65 Spring Street Plympton, MA 02367 / Tel 781.294.0100 / Website www.litecontrol.com

HUBBELL Lighting

LITECONTROL
making light work™

DATE: LOCATION:

TYPE: PROJECT:

CATALOG #:

3L-R-D

MOD™ 3 LED RECESSED DIRECT

DIMENSIONS

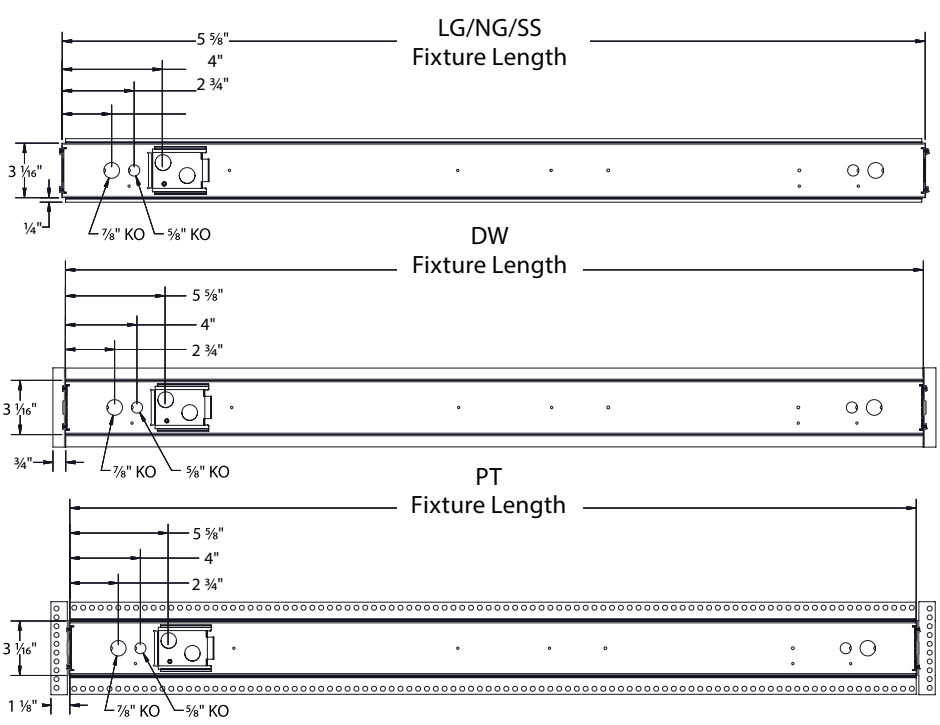

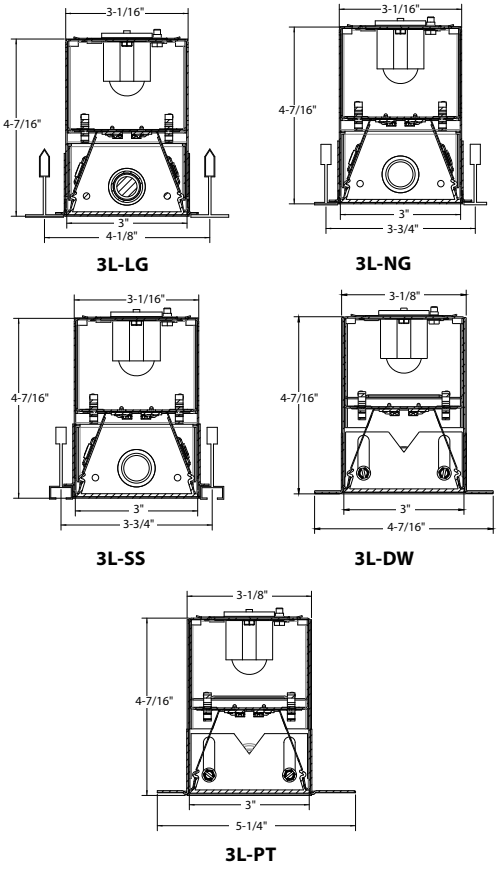

INDIVIDUAL MOUNTING

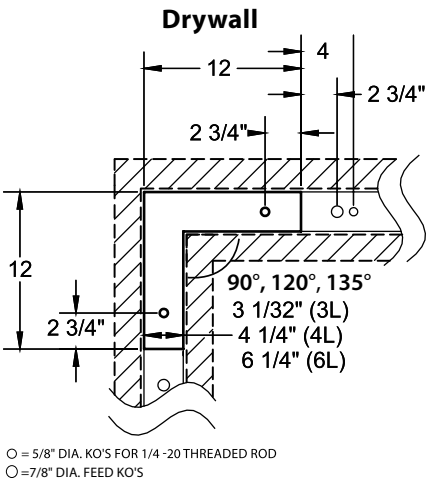

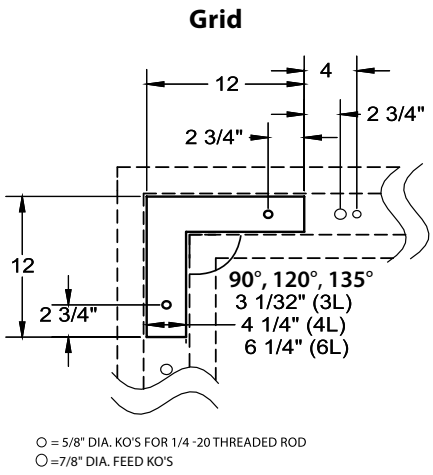

PATTERNS

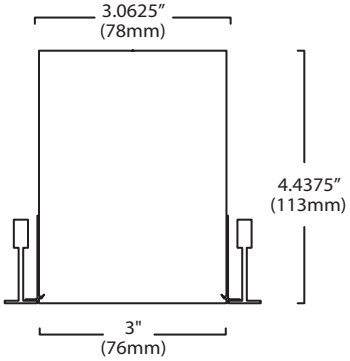

END CAP VIEW

© 2022 Litecontrol, a division of Hubbell Lighting, Inc. Specifications subject to change without notice.
65 Spring Street Plympton, MA 02367 / Tel 781.294.0100 / Website www.litecontrol.com

HUBBELL Lighting

DATE: LOCATION:

TYPE: PROJECT:

CATALOG #:

3L-R-D

MOD™ 3 LED RECESSED DIRECT

PHOTOMETRY

3L-R-D-04-SOF-X-CX-35K-D100

LUMINAIRE DATA

Description	**3L Recessed, Soft Diffuse Lens, 3500K**
Delivered Lumens	**4000**
Watts	
Efficacy	**111**
Mounting	**Recessed**

ZONAL LUMEN SUMMARY

Zone	Lumens	% Luminaire
0–40	1885.80	47.1
0–60	3214.60	80.4
0–90	4000.00	100.0
0–180	4000.00	100.0

POLAR GRAPH

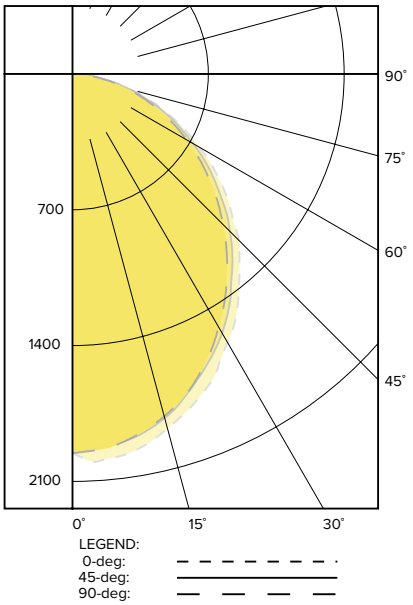

3L-R-AD-XX-XX-ASYM-CX-35K-D050

LUMINAIRE DATA

Description	**3L Recessed, Drop Lens, 3500K**
Delivered Lumens	**2000**
Watts	
Efficacy	**116**
Mounting	**Recessed**

ZONAL LUMEN SUMMARY

Zone	Lumens	% Luminaire
0–40	921.00	48.20
0–60	1575.00	82.40
0–90	1911.00	100.00
0–180	1911.00	100.00

POLAR GRAPH

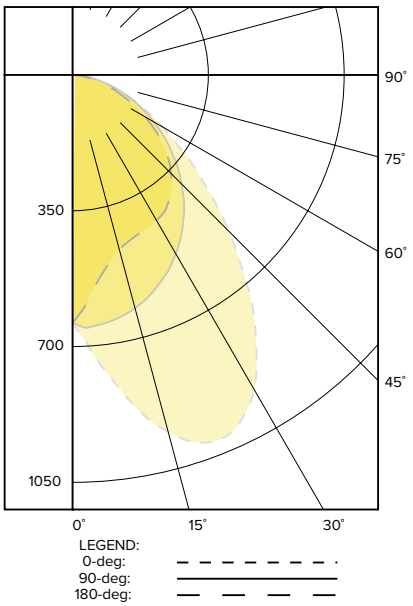

© 2022 Litecontrol, a division of Hubbell Lighting, Inc. Specifications subject to change without notice.
65 Spring Street Plympton, MA 02367 / Tel 781.294.0100 / Website www.litecontrol.com

DATE: LOCATION:

TYPE: PROJECT:

CATALOG #:

3L-R-D

MOD™ 3 LED RECESSED DIRECT

PHOTOMETRY

3L-X-D-04-BAT-X-CX-35K-D100

LUMINAIRE DATA

Description	**3L Recessed, Soft Diffuse Lens, 3500K**
Delivered Lumens	**4000**
Watts	
Efficacy	**111**
Mounting	**Recessed**

ZONAL LUMEN SUMMARY

Zone	Lumens	% Luminaire
0–40	1630.85	40.76
0–60	3157.61	78.92
0–90	4001.02	100.0
0–180	4001.02	100.0

POLAR GRAPH

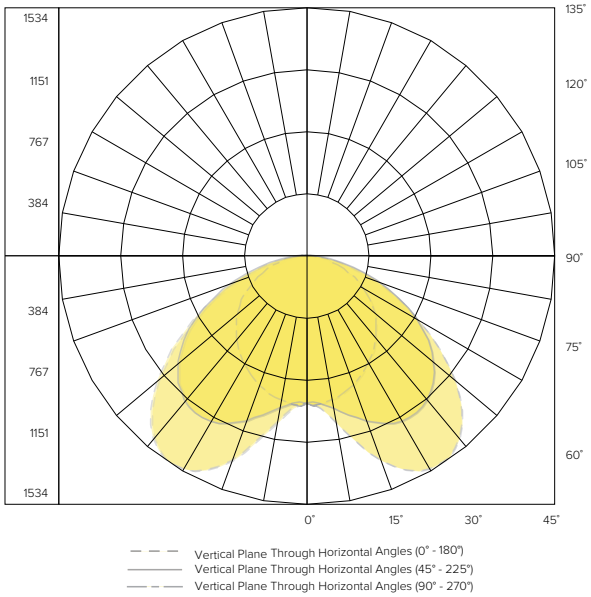

3L-X-D-04-DRP-CX-35K-D100

LUMINAIRE DATA

Description	**3L Recessed, Drop Lens, 3500K**
Delivered Lumens	**4000**
Watts	
Efficacy	**111**
Mounting	**Recessed**

ZONAL LUMEN SUMMARY

Zone	Lumens	% Luminaire
0–40	1695.26	42.40
0–60	2894.74	72.40
0–90	3753.66	93.88
0–180	3998.21	100.0

POLAR GRAPH

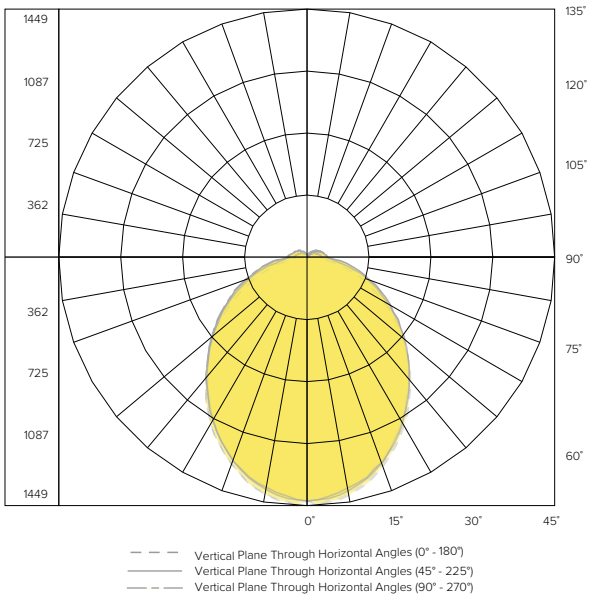

© 2022 Litecontrol, a division of Hubbell Lighting, Inc. Specifications subject to change without notice.
65 Spring Street Plympton, MA 02367 / Tel 781.294.0100 / Website www.litecontrol.com

LITECONTROL
making light work™

DATE: LOCATION:

TYPE: PROJECT:

CATALOG #:

3L-R-D

MOD™ 3 LED RECESSED DIRECT

TM-30 DATA

COLOR VECTOR GRAPHIC

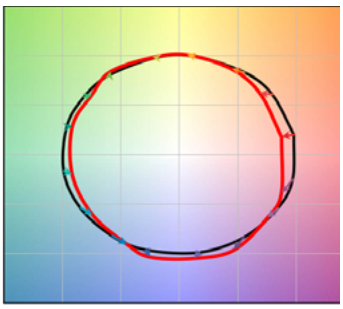

*Graphics shown are at 35K

Reference Illuminant — Test Source

COLOR DISTORTION GRAPHIC



TEST RESULTS - 3500K	
Value	80+ CRI
CCT (K)	3494
CIE R_a	83
D_{UV}	-0.0004
R_f	82
R_g	96
x	0.4052
y	0.3898

COLOR CHARACTERISTICS:

Value	Ordering Code		
	30K	35K	40K
Rf	83	82	82
Rg	96	96	96
CCT (K)	3009	3494	3975
Duv	-0.0009	-0.0004	-0.0003
x	0.435	0.4052	0.3814
y	0.4012	0.3898	0.3768
CIE Ra	83	83	84

SPECTRAL DISTRIBUTION:

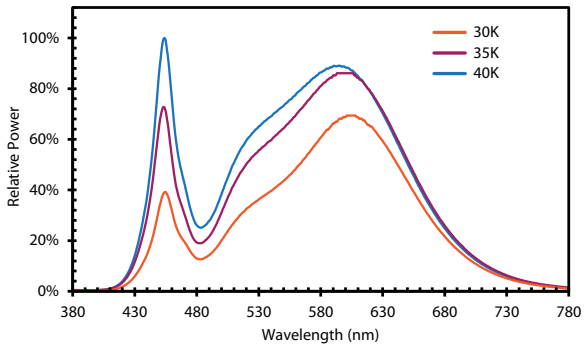

COLOR VECTOR GRAPHIC:

30K

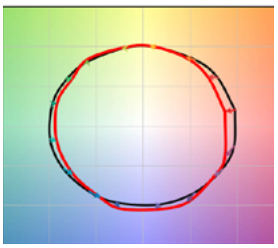

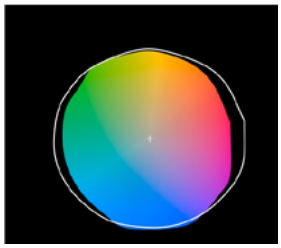

35K

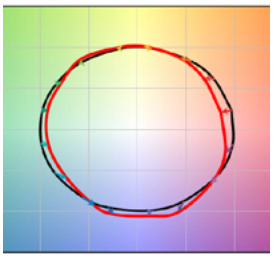



40K

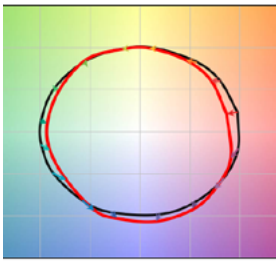



COLOR GAMUT/FIDELITY PLOT:

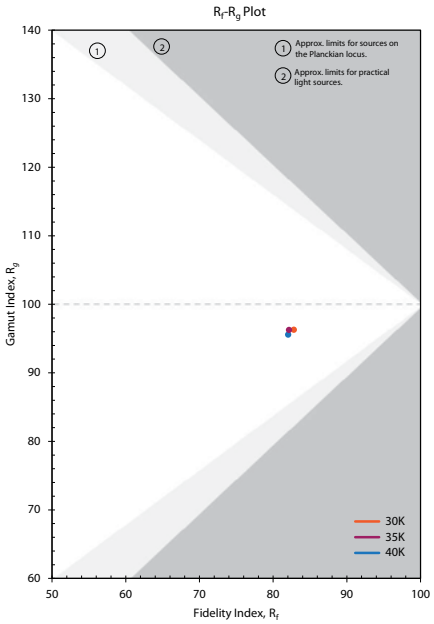

CRI: 80 MINIMUM

CCT	CRI	R1	R2	R3	R4	R5	R6	R7	R8	R9	R10	R11	R12	R13	R14
30K	83	82	91	97	81	82	89	84	62	13	79	79	69	84	99
35K	83	81	89	95	81	81	85	86	65	13	73	79	62	83	97
40K	84	82	90	94	82	82	85	87	68	17	74	80	60	84	97

© 2022 Litecontrol, a division of Hubbell Lighting, Inc. Specifications subject to change without notice.
65 Spring Street Plympton, MA 02367 / Tel 781.294.0100 / Website www.litecontrol.com

HUBBELL Lighting

DATE: LOCATION:

TYPE: PROJECT:

CATALOG #:

3L-R-D

MOD™ 3 LED RECESSED DIRECT

ADDITIONAL INFORMATION

Driver

D01	100%- 1% dimming range. Fixture will be wired for low voltage 0-10V dimming control.
D00	Dim-to-Off 100%-1% dimming range. Fixture will be wired for low voltage 0-10V dimming control.
D05	100%-5% dimming range, Fixture will be wired for low voltage 0-10V dimming control. Only applicable if either 2230TD, 2750T or 2765T is selected.
DS1	Soft-Start 100%-1% dimming range. Fixture will be wired for low voltage 0-10V dimming control.
DS0	Soft-Start Dim-to-Off 100%-1% dimming range. Fixture will be wired for low voltage 0-10V dimming control.
LEC	Hi-Lume 1% EcoSystem LED Driver with Soft-On, Fade-to-Black dimming technology.
DALI	DALI compatible.
DALIP	Self-Powered DALI bus (e.g. DEXAL)
NDM	Non-dimming. Fixture will be wired for fixed light output.

Rated Life

Tested in accordance to LM79-2008 & derived from EPA TM-21 calculator
L70: 280,000 (calculated per TM-21 extrapolated curve)
L70: >61,000 (reported per TM-21/LM80 6x's limitation)
L90: 72,000 (calculated per TM-21 extrapolated curve)
L90: >61,000 (reported per TM-21/LM80 6x's limitation)

Rated Life (Driver)

Standard = 100,000 hours
Lutron = 50,000 hours

© 2022 Litecontrol, a division of Hubbell Lighting, Inc. Specifications subject to change without notice.
65 Spring Street Plympton, MA 02367 / Tel 781.294.0100 / Website www.litecontrol.com

CITY OF SPRINGBORO
PLANNING COMMISSION

Application for Planned Unit Development
Application No.: _____

☐ Rezoning/General Plan ☒ Final Development Plan ☐ Record Plan ☐ Revision
Fee $344

NAME OF DEVELOPMENT: Clearview Crossing of Stone Ridge

DEVELOPER'S NAME: John Konovodoff, Maronda Homes of Cincinnati, LLC.
Address: 5900 Wilcox Place, Dublin, Ohio 43016
Telephone No.: (312) 505-4419 Fax No.: (_____) _____
Email: jkonovodoff@maronda.com

OWNER'S NAME: Robert Abernathy, Stone Ridge Development Ltd.
Address: 807 Stokes Reserve Ct, Lebanon, OH 45036
Telephone No.: (____) _____ Fax No.: (____) _____
Email: abernathyinv@roadrunner.com

LOCATION DESCRIPTION:
Project Location: Rt 73; Red Lioin-Five Points Rd
Parcel #: 04013000580 (If necessary, attach a legal description.)
Existing Land Use: Vacant
PUD-R rezone approved per zoning ordinance no. 0-23-3
General plan approved by resolution no. R-23-8

PUD FEATURES:
Total Area (acres): 12.08 Number of Lots: 41
Type of PUD: ☒ Residential ☐ Business ☐ Office ☐ Manufacturing ☐ Mixed
If Mixed, acreage in each area: ____ Residential _____Business ____Manufacturing ___Office
Proposed Density: 3.4 DU/AC Proposed Number of Units: 41 total units
Type of Units:
Single family detached.

ZONING:
Current Zoning: PUD-R Proposed District (if appropriate): _____

_____ May 05 2023
(Signature of Developer and/or Owner) (Date)

Real Estate
Letter of Authorization

PID #: 04013000580

Properly Address: Rt. 73 @ Red Lion-Five Points Rd.

Owner of Record: Robert Abernathy, Stone Ridge Development Ltd.

Address: 807 Stokes Reserve C, Lebanon, OH 45036

Telephone Number:

Email Address: abernathyinv@roadrunner.com

As owner(s) of the referenced property I (we) hereby appoint the following company or individual to represent me (us) as agent to the City of Springboro.
I (we) have reviewed my/our agent's valuation and or opinions and are in agreement with same.

Names of Agent and Firm: Todd Lipschutz, Maronda Homes of Cincinnati, LLC

Address: 3900 Wilcox Place, Dublin, OH 43106

Telephone Number: 614.659.1546

Email Address: tlipschutz@maronda.com

Owner Signature: 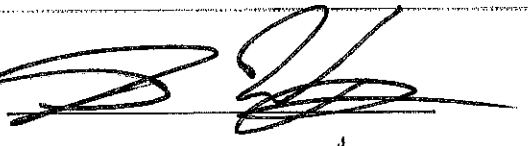

Agent Signature: 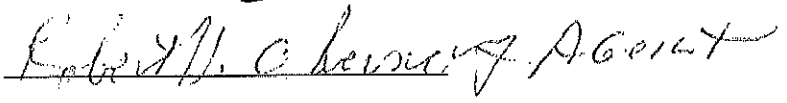

Notary Signature & Seal: JEFFREY B. WALTHER, Notary Public and for the State of Ohio My Commission Expires April 9, 2013

LSSE
Civil Engineers and Surveyors
Est. 1985
HEADQUARTERS IN CORAOPOLIS, PENNSYLVANIA

MANAGING PRINCIPALS
Kevin A. Brett, P.E.
Ned Mitrovich, P.E.
Jason E. Stanton, P.E.

May 25, 2023

S. O. No. 308-343

VIA EMAIL AND FEDEX
(danb@cityofspringboro.com)

Mr. Dan Boron, City Planner
City of Springboro
320 W Central Avenue
Springboro, Ohio 45066

Subject: **Clearview Crossing at Stone Ridge**
Maronda Homes, LLC
Stage II Final Development Plans

Dear Mr. Boron:

On behalf of Maronda Homes, LLC, LSSE is transmitting herewith the following items in digital and hard copy format:

1. One (1) copy of the signed application;
2. One (1) copy of the letter of authorization;
3. One (1) copy of the Project narrative;
4. One (1) copy of the architectural elevations and floor plans;
5. One (1) copy of the Clearview Crossing Aquatic Resource Report;
6. Six (6) Full Size copies of the Clearview Crossings at Stoneridge Final Development Plans (Title Sheet and Sheet Nos 1 through 16 of 16);
7. Six (6) Half Size copies, 11x17 format, of the Clearview Crossings at Stoneridge Final Development Plans (Title Sheet and Sheet Nos 1 through 16 of 16);
8. One (1) copy of the Stormwater Pollution Prevention Plan Report;
9. One (1) copy Erosion & Sedimentation Control Plan and Details (Sheets ES1 through ES5 of ES5);

10. One (1) copy of the Stormwater Management/Post Construction Stormwater Management Report; and

11. One (1) copy of the SWPPP Site & PCSM Plan and Details (Sheets PCSM1 through PCSM 2 of PCSM2).

We are requesting that the Springboro at Stone Ridge Stage II Final Development Plans be placed on the Planning Commission Agenda for the June 14, 2023 for review. Application fees will be delivered by Maronda Homes, LLC under separate cover.

Should you have any questions, please contact Joanne L. Shelly, RLA, AICP, LEED BD+C directly (412-239-1819).

Sincerely,

Kevin A. Brett, P.E.

Joanne L. Shelly, RLA, AICP, LEED BD+C

KAB/JLS:als

Enclosures

cc/enc: John Konovodoff, Maronda Homes (konovodofj@maronda.com)
Todd Lipschutz, Maronda Homes (lipschutzt@maronda.com)
Anne Burns, City of Springboro (ann.burns@cityofspringboro.com)

Clearview Crossing

at Stone Ridge
Final Development Plans
Situate In
City of Springboro
Warren County, Ohio

Prepared For

Maronda Homes
5900 Wilcox Place
Dublin, Ohio 43016

May 2023

SITE DATA

JURISDICTION:
CITY OF SPRINGBORO
WARREN COUNTY, OHIO
CURRENT ZONING: PUD–R
PERMITTED USE: RESIDENTIAL
SINGLE FAMILY DETACHED,
ACCESSORY USE / STRUCTURES

PROPOSED: 41 TOTAL LOTS
41 SINGLE FAMILY – DETACHED HOMES
MIN LOT WIDTH: 52'
MIN LOT SIZE: 5,460 SQFT
MAX. BUILDING HEIGHT 35' (2.5 STORIES)

TOTAL AREA:	12.08 ACRES
PROPOSED DENSITY:	3.4 DU/AC
SETBACK REQUIREMENTS	
PROPOSED ZONE:	PUD–R (UNDERLAY R–3)
FRONT:	25'
SIDE:	5'
REAR:	15'
BUILDING AREA	
MINIMUM:	1,376 SQFT
MAXIMUM:	2,120 SQFT
MAX. LOT COVERAGE:	NTE 75%
ACCESSORY STRUCTURES:	ALLOWED
TOTAL AREA OF OPEN SPACE:	3.51 ACRES
REQUIRED OPEN SPACE:	25.0%
PROVIDED OPEN SPACE:	29.0%
OPEN SPACE	
NE CORNER AREA:	0.88 ACRES
NW CORNER AREA:	1.42 ACRES
PERIMETER BUFFER AREA:	1.21 ACRES
SWM BASIN AREA:	1.19 ACRES
ROW AREA:	1.95 ACRES

PROPOSED INFRASTRUCTURE:
-- 50' ROW; 29' ROADWAY; 5' SIDEWALKS
-- 25' BUFFER; NORTH AND EAST SIDES
-- 10' PAVED PATH; NORTH AND EAST SIDES

DESCRIPTION OF APPLICATION:

THE PURPOSE OF THIS APPLICATION IS TO REQUEST THE APPROVAL OF THE STAGE II FINAL DEVELOPMENT PLANS.

THE PROPERTY UNDERLYING ZONE IS R3, MEDIUM DENSITY RESIDENTIAL. THE TOTAL AREA OF THE SITE IS 12.08 AC. THE PROPOSAL IS 41 SINGLE FAMILY DETACHED HOMES. THE PROPOSED DENSITY IS 3.4 DU/AC. 25% OPEN SPACE IS REQUIRED AND +/– 30% OPEN SPACE IS PROVIDED.

THE SPRINGBORO MASTER PLAN, ADOPTED BY CITY COUNCIL IN FEBRUARY 2022, INCLUDES RECOMMENDATIONS FOR THE LONG–RANGE DEVELOPMENT OF THE COMMUNITY. IT IS DIVIDED INTO 16 POLICY AREAS. POLICY AREA 12, SOUTHEAST NEIGHBORHOODS INCLUDING THE ADJOINING NEIGHBORHOODS OF THE ENCLAVE, NORTH HILLS, CREEKSIDE, FIELDSTONE, SUBDIVISIONS. THE POLICY AREA RECOMMENDS RESIDENTIAL DEVELOPMENT THAT CONFORMS TO THE EXISTING CHARACTER OF ADJOINING NEIGHBORHOODS. THE PLAN PROPOSED BY MARONDA HOMES IS A RESIDENTIAL DEVELOPMENT WITH HOME AND LOT SIZES SIMILAR AND COMPLIMENTARY TO THE ADJACENT NEIGHBORHOODS. THE PLAN ALSO RECOMMENDS CONNECTING NEIGHBORHOODS IN THE AREA, AND IMPROVING PEDESTRIAN AND BICYCLE ACCESS. THE PLAN PROPOSES TO CONNECT TO STUB STREETS AND PROVIDE SIDEWALKS ALONG PRIMARY STREETS, WITH IN THE DEVELOPMENT AND CONNECTIONS BETWEEN PRIMARY STREETS AND ADJACENT COMMUNITIES; INFILLING GAPS IN THE PEDESTRIAN/BIKE NETWORK.

ONE CALL RESPONDENTS

Information as to the location and type of underground utilities and structures shown are approximate. Contractor(s) shall verify all such information in the field. Prior to any excavation, the Contractor(s) shall notify the Ohio Utility Protection Services by calling 811. Locations of the utilities shown on the drawings or within the construction area are based on information provided through the Ohio Utility Protection Services Serial No. A224302365-00A. The respondents to the One Call notification were:

OUPS Contacts			
Utility	Company	Address	Tele. No.
NATURAL GAS	CONTACT: COLUMBIA GAS	2101 W MAIN ST SPRINGFIELD, OH 45504	(937) 322–7111
GAS	CONTACT: DUKE ENERGY GAS	1199 NILES RD FAIRFIELD, OH 45014	(513) 439–3886
ELECTRIC	CONTACT: DUKE ENERGY ELECTRIC	1199 NILES RD FAIRFIELD, OH 45014	(513) 535–2655
WATER	CONTACT: CITY OF SPRINGBORO	1320 W CENTRAL AVENUE SPRINGBORO, OH 45066	(937) 748–6184
SEWER	CONTACT: WARREN COUNTY	406 JUSTICE DRIVE LEBANON, OH 45036	(513) 695–1377
TRAFFIC	CONTACT: ODOT DISTRICT 8	505 S. STATE ROUTE 741 LEBANON, OH 45036	(513) 932–3030

OHIO Utilities Protection SERVICE
Call Before You Dig
1–800–362–2764 or 811

CALL 811
Serial #A224302365-00A

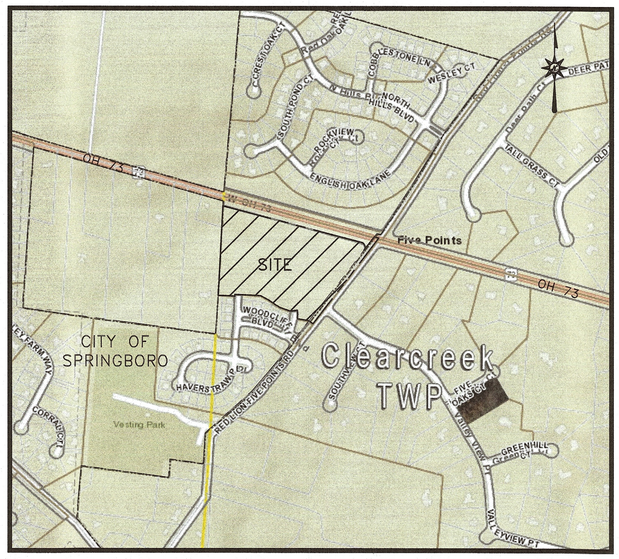

Base Map taken from Warren County Auditor

Location Map
N. T. S.

Sheet List Table		
Sheet Number	Sheet Title	Sheet Number
	Land Development	
--	Title Sheet	--
1 of 19	Existing Conditions Plan	308–343–1
2 of 19	Site Plan	308–343–2
3 of 19	Grading Plan	308–343–3
4 of 19	Utility Plan	308–343–4
5 of 19	Road Profiles	308–343–5
6 of 19	Storm Sewer Profiles	308–343–6
7 of 19	Sanitary Sewer Profiles	308–343–7
8 of 19	Waterline Profiles	308–343–8
9 of 19	Landscape Plan	308–343–9
10 of 19	Storm Details	308–343–10
11 of 19	Storm Details	308–343–11
12 of 19	Sanitary Details	308–343–12
13 of 19	Utility Details	308–343–13
14 of 19	Utility Details	308–343–14
15 of 19	Site Details	308–343–15
16 of 19	Site Details	308–343–16
17 of 19	Plan and Profile	308–343–17
18 of 19	Plan and Profile	308–343–18
19 of 19	Intersection Detail	308–343–19
	Erosion & Sedimentation Control	
ES1 of ES5	Erosion & Sedimentation Control Plan	308–343–ES1
ES2 of ES5	Erosion & Sedimentation Control Details	308–343–ES2
ES3 of ES5	Erosion & Sedimentation Control Details	308–343–ES3
ES4 of ES5	Erosion & Sedimentation Control Details	308–343–ES4
ES5 of ES5	Erosion & Sedimentation Control Details	308–343–ES5
	SWPP Site and PCSM Plans	
PCSM1 of PCSM2	SWPPP Site & PCSM Plan	308–343–PCSM1
PCSM1 of PCSM2	Stormwater Details	308–343–PCSM2

STATE OF OHIO
JOHN HEYL
E-85187
REGISTERED
PROFESSIONAL ENGINEER

MARONDA Homes

Maronda Homes
Applicant: Todd Lipschutz
Address: 5900 Wilcox Place,
Dublin, Ohio 43016
Telephone: 614.659.1546

LSSE Civil Engineers and Surveyors

5980 Suite J Wilcox Place
Dublin, Ohio 43016
Phone: 412–264–4400
Fax: 412–264–1200
email: info@lsse.com

ENGINEER: JOHN R. HEYL, P.E. OH #PE88187
SURVEYOR: BRAD L. GOODBALLET, P.S., P.L.S. OH PS7705
LANDSCAPE ARCHITECT/PLANNER: JOANNE L. SHELLY, RLA, AICP

K:\PROJ\308\308-343 Springboro\DWG\308-343IT.dwg Layout=Title Sheet User=Jason McMonigle Plotted=6/12/2023 1:44 PM

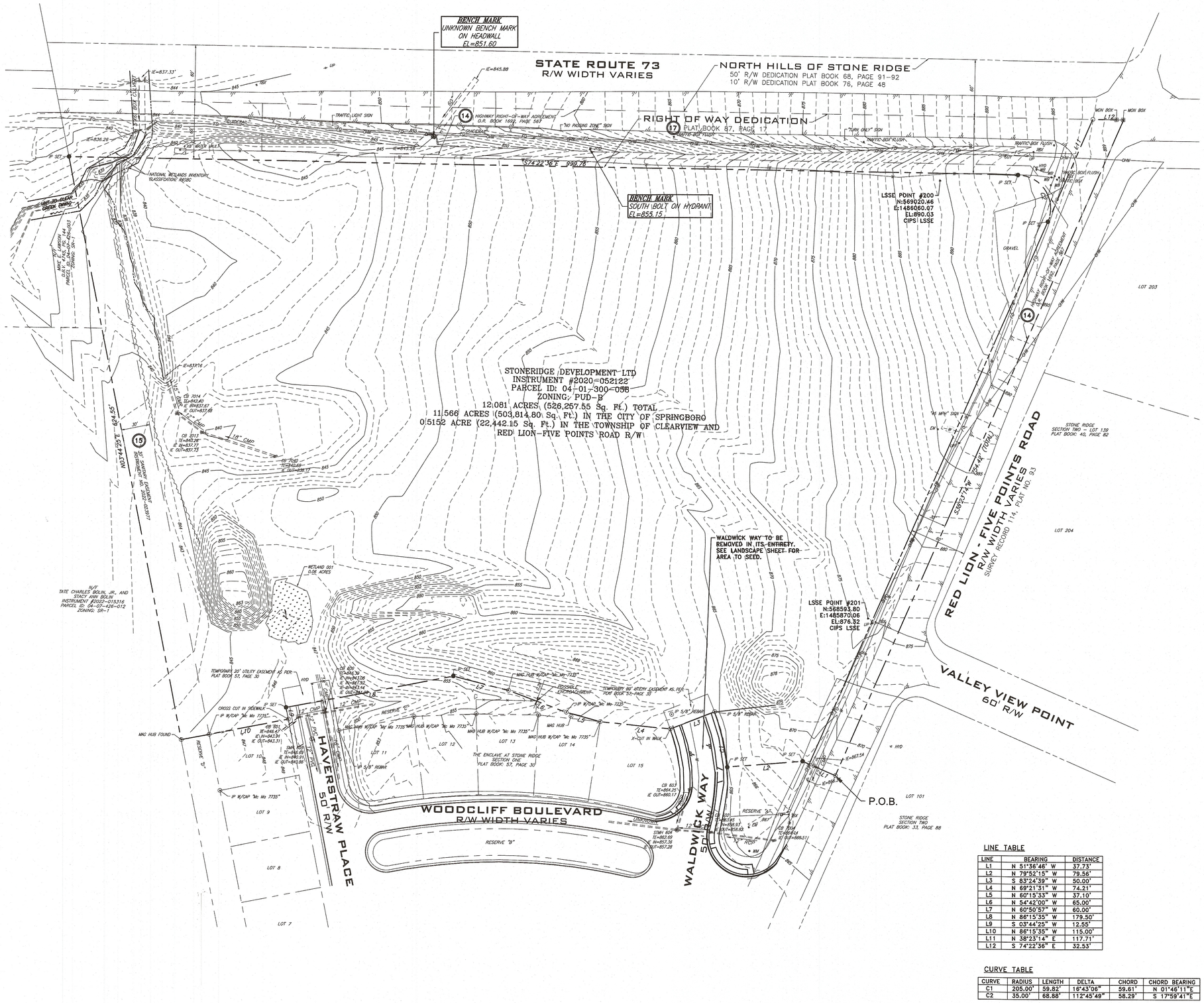

EXISTING LEGEND

- CONTOUR (1-ft)
- 1270 CONTOUR (5-ft)
- CURB (Concrete)
- FP FENCELINE W/ POST
- GUIDERAIL
- LS LIGHT STANDARD
- MANHOLES: SANITARY, STORM, TELEPHONE, MISC
- PAVEMENT EDGE
- DRIVE EDGE
- PROPERTY LINE (Municipal Boundary)
- PROPERTY LINE (Subject Parcel)
- PROPERTY LINE (Parcel)
- RIGHT-OF-WAY LINE
- EASEMENT LINE
- SETBACK LINE
- S SIGN
- DECIDUOUS TREE
- TREELINE
- BUSH
- UE UTILITY LINE (Electric)
- UT UTILITY LINE (Underground Telephone)
- FO UTILITY LINE (Fiber Optic)
- CB GM GLM GV UTILITY LINE (Gas) W/ BOX, METER, MARKER, AND VALVE
- 8" PVC UTILITY LINE (Sanitary Sewer) W/ MANHOLES
- 15" CPP UTILITY LINE (Storm Sewer) W/ CATCH BASIN AND MANHOLE
- UP OHW GW UTILITY LINE (Telephone) W/ POLE, OVERHEAD WIRE AND GUY WIRE
- WB WM WV UTILITY LINE (Water) W/ BOX, METER, HYDRANT AND VALVE
- HYD
- 49 B-II EXCEPTION

PROJECT DATUM

Horizontal: Ohio State Plane Coordinates, South Zone as collected by GPS VRS on September 22, 2022. Rotating the plan counterclockwise 00°54'44" will match the bearing basis of the "LEGAL DESCRIPTION" shown hereon.

Vertical: Coast and Geodetic Survey Sea Level Datum of 1988. (NAVD 88)

EXISTING UTILITIES NOTES:

1. The underground utilities shown have been located by field survey of markings made in the field by the respective utility company or taken from drawings of the existing utilities provided by the utility companies. All existing subsurface utility information presented on the drawing is characterized as utility quality level C or D per "CI/ASCE 38-02 - Standard Guidelines for the collection and depiction of existing subsurface utility data" unless specifically noted otherwise.
2. The engineer or surveyor makes no guarantee that the underground utilities shown comprise all such utilities in the area, either in service or abandoned.
3. Furthermore, the engineer or surveyor does not warrant that the underground utilities shown are in the exact location indicated, they are located using ordinary standards of care and practice and shown hereon based upon available information.
4. The engineer or surveyor has not physically located any of the underground utilities.

LSSE #200 SURVEY CONTROL POINT

NORTHING: 569020.46
EASTING: 1486060.07
ELEVATION: 890.03
DESCRIPTION:
CAPPED IRON PIN

LSSE #201 SURVEY CONTROL POINT

NORTHING: 568593.80
EASTING: 1485870.06
ELEVATION: 876.32
DESCRIPTION:
CAPPED IRON PIN

LSSE #509 SURVEY CONTROL POINT

NORTHING: 568644.33
EASTING: 1485252.17
ELEVATION: 846.76
DESCRIPTION:
CROSS CUT IN CONCRETE SIDEWALK

LSSE #514 SURVEY CONTROL POINT

NORTHING: 569034.10
EASTING: 1486262.83
ELEVATION: 900.61
DESCRIPTION:
MONUMENT BOX AT INTERSECTION

LINE TABLE

LINE	BEARING	DISTANCE
L1	N 51°36'46" W	37.73'
L2	N 79°52'15" W	79.56'
L3	S 83°24'39" W	50.00'
L4	N 69°21'31" W	74.21'
L5	N 60°15'33" W	37.10'
L6	N 54°42'00" W	65.00'
L7	N 60°50'57" W	60.00'
L8	N 86°15'35" W	179.50'
L9	S 03°44'25" W	12.55'
L10	N 86°15'35" W	115.00'
L11	N 38°23'14" E	117.71'
L12	S 74°22'36" E	32.53'

CURVE TABLE

CURVE	RADIUS	LENGTH	DELTA	CHORD	CHORD BEARING
C1	205.00'	59.82'	16°43'06"	59.61'	N 01°46'11"E
C2	35.00'	68.88'	112°45'49"	58.29'	S 17°59'41"E

STATE OF OHIO
JOHN HEYL
E-88187
REGISTERED
PROFESSIONAL ENGINEER

OHIO Utilities Protection SERVICE
Serial No. A224302365-00A
Call Before You Dig
1-800-362-2764 or 811

Scale:	Drawn By	Checked By	Approved By
1"=50'			

No.	Date	Description	By

No.	Date	Description	By

No.	Date	Description	By

LSSE
Civil Engineers and Surveyors
5980 Wilcox Place, Suite J
Dublin, Ohio 43016
Phone: (614) 395-1661
Corporate: (412) 264-4400
email: info@lsse.com

Filename: 308-343TP.dwg
Date: May 2023

Maronda Homes
5900 Wilcox Place
Dublin, Ohio 43016

Clearview Crossing
at Stone Ridge
Final Development Plans
Situated In
City of Springboro, Warren County, Ohio

Sheet Title: Existing Conditions Plan
Drawing No.: 308-343-1
Sheet No.: 1 of 19

N:\PROJ\308\308-343 Springboro\DWG\308-343TP.dwg Layout=1 Existing Conditions Plan User=Jason McMonigle Plotted=6/12/2023 1:44 PM

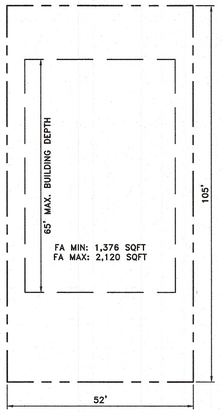

BUILDABLE AREA
SINGLE FAMILY, DETACHED
SCALE: 1"=20'

SITE NOTES:

1. NOTIFY THE OHIO 811 B.U.D. SERVICE (BEFORE YOU DIG) AT (800) 752-6007 OR (811) A MINIMUM OF (5) DAYS PRIOR TO ANY DEMOLITION, EXCAVATION, OR CONSTRUCTION. ALL EXISTING SUBSURFACE UTILITY INFORMATION PRESENTED ON THE CONTRACT DRAWINGS IS CHARACTERIZED AS UTILITY QUALITY LEVEL C OR D PER "CI/ASCE 38-02 - STANDARD GUIDELINES FOR THE COLLECTION AND DEPICTION OF EXISTING SUBSURFACE UTILITY DATA" UNLESS SPECIFICALLY NOTED OTHERWISE.
2. CONTRACTOR AND OTHER INTERESTED PARTIES SHALL SCHEDULE AND ATTEND A PRECONSTRUCTION CONFERENCE WITH THE PROJECT DELIVERY AND PRESERVATION OFFICE. REFER TO THE OHIO TRANSPORTATION CABINET CONSTRUCTION GUIDANCE MANUAL, SECTION CST-209 FOR A LIST OF TOPICS TO BE COVERED. REFER TO SECTION 108.02 OF THE STANDARD SPECIFICATIONS FOR A DETAILED DESCRIPTION ON SUBMITTALS THAT ARE REQUIRED AT THE PRECONSTRUCTION CONFERENCE.
3. ALL WORK AND MATERIALS TO COMPLY WITH ALL SPECIFICATIONS PROVIDED AND TO ALL LOCAL, COUNTY, STATE, AND FEDERAL REGULATIONS AND CODES; AND O.S.H.A. STANDARDS.
4. IMPLEMENT AND MAINTAIN A WORK ZONE TRAFFIC CONTROL PLAN IN ACCORDANCE WITH THE OHIO TRANSPORTATION CABINET CONSTRUCTION GUIDANCE MANUAL, SECTION CST-208 ("TRAFFIC CONTROL") FOR WORK IN OR ADJACENT TO PUBLIC VEHICULAR TRAFFIC AREAS. REFER TO SECTION CST-112 FOR DETAILS ON IMPLEMENTATION OF A TRAFFIC CONTROL PLAN, AS WELL AS FURNISHING, INSTALLING AND MAINTAINING BARRICADES, SIGNS, PAVEMENT MARKERS, AND OTHER TRAFFIC CONTROL DEVICES. ALL SIGNAGE AND TRAFFIC CONTROL DEVICES MUST CONFORM TO THE MANUAL ON UNIFORM TRAFFIC CONTROL DEVICES, LATEST EDITION.
5. DESIGNATE AND MAINTAIN ON-SITE A TRAINED COMPETENT PERSON FOR ALL EXCAVATION WORK WHO SHALL BE ON CALL 24-HOURS-PER-DAY-7-DAYS-PER-WEEK IN CASE OF EMERGENCY. PROVIDE 24-HOUR CONTACT INFORMATION FOR THE TRAINED COMPETENT PERSON PRIOR TO ANY WORK.
6. MAINTAIN AREAS OUTSIDE THE WORK AREA AND TRAVELED WAYS WITHIN THE WORK AREA IN A CONDITION USABLE BY THE PUBLIC. KEEP AREAS CLEAN AND FREE OF MUD OR DUST AND REPAIR/PATCH VEHICULAR AND PEDESTRIAN TRAVEL WAYS AS REQUIRED TO MAINTAIN ACCESS.
7. REFER TO THE ARCHITECTURAL PLANS FOR EXACT LOCATIONS AND DIMENSIONS OF VESTIBULES, SLOPE PAVING, SIDEWALKS, EXIT PORCHES, TRUCK DOCKS, PRECISE BUILDING DIMENSIONS, EXACT BUILDING UTILITY ENTRANCE LOCATIONS, AND OTHER BUILDING APPURTENANCES. VERIFY DIMENSIONS AND LOCATIONS SHOWN ON THE ARCHITECTURAL PLANS AND NOTIFY THE OWNER AND ENGINEER OF ANY CONFLICTS OR DISCREPANCIES PRIOR TO CONSTRUCTION. REFERENCE BUILDING CONSTRUCTION PLANS FOR EXACT LOCATION OF ALL UTILITY CONNECTIONS TO BUILDINGS, DOOR/STEP LOCATIONS AND TRUCK WELL RETAINING WALLS AND NOTIFY THE OWNER AND ENGINEER OF ANY CONFLICTS OR DISCREPANCIES PRIOR TO CONSTRUCTION.
8. OBTAIN ALL REQUIRED LOCAL, STATE, OR FEDERAL PERMITS NECESSARY FOR CONSTRUCTION FROM GOVERNING AGENCIES INCLUDING SUBMISSION OF APPLICATIONS AND PAYMENT OF ASSOCIATED FEES, INCLUDING PERMITS FOR BORROW OR WASTE SITES.
9. ALL DIMENSIONS AND RADII ARE TO THE FACE OF CURB UNLESS OTHERWISE NOTED. ALL CURBED AND STRIPED RADII ARE 5' UNLESS OTHERWISE NOTED.
10. PROVIDE PAVING MATERIALS IN ACCORDANCE WITH OHIO TRANSPORTATION CABINET CONSTRUCTION GUIDANCE MANUAL, CHAPTERS 1000 AND 1100.
11. REMOVE AND DISPOSE OF ALL RUBBISH, TRASH, DEBRIS, AND ORGANIC MATERIAL IN A LAWFUL MANNER. BURNING OF MATERIAL ONSITE IS NOT PERMITTED.
12. NEW AND EXISTING HOMES SHALL BE PROVIDED WITH APPROVED ADDRESS IDENTIFICATION PER SECTION 505.1. THE ADDRESS IDENTIFICATION SHALL BE LEGIBLE AND BE PLACED IN A POSITION THAT IS VISIBLE FROM THE STREET OR ROAD FRONTING THE PROPERTY.
13. STREET AND ROADS SHALL BE IDENTIFIED WITH APPROVED SIGNS PER SECTION 505.2. TEMPORARY SIGNS SHALL BE INSTALLED AT EACH STREET INTERSECTION WHEN CONSTRUCTION OF NEW ROADWAYS ALLOW PASSAGE BY VEHICLES, SIGNS SHALL BE APPROVED SIZE, WEATHER RESISTANT AND BE MAINTAINED UNTIL REPLACED BY PERMANENT SIGNS.

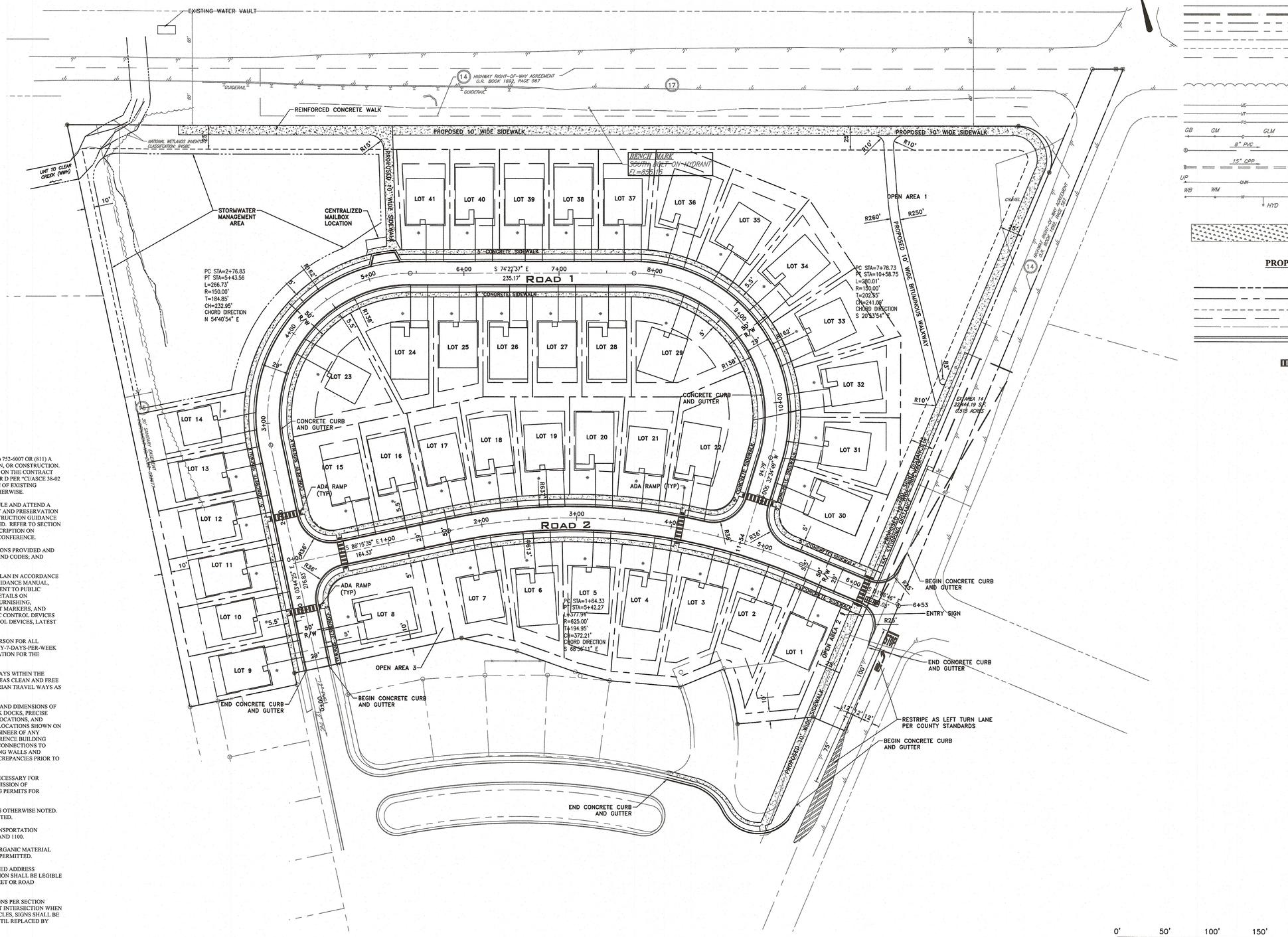

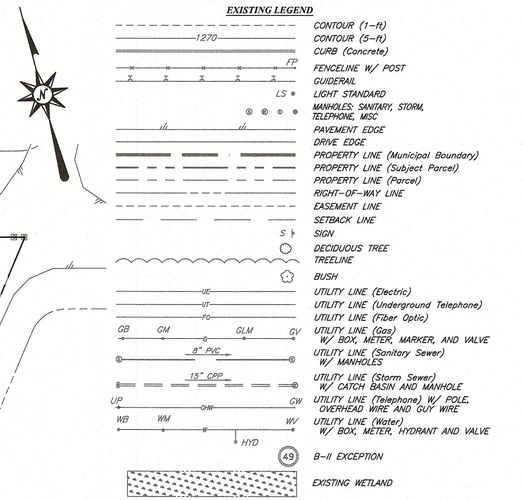



STATE OF OHIO
JOHN HEYL
E-88187
REGISTERED
PROFESSIONAL ENGINEER

Scale: 1"=50'	Drawn By	Checked By	Approved By

No.	Date	Description	By

No.	Date	Description	By

No.	Date	Description	By

LSSE Civil Engineers and Surveyors
5980 Wilcox Place, Suite J
Dublin, Ohio 43016
Phone: (614) 395-1661
Corporate: (412) 264-4400
email: info@lsse.com

Filename: 308-343SP.dwg
Date: May 2023

Maronda Homes
5900 Wilcox Place
Dublin, Ohio 43016

Clearview Crossing
at Stone Ridge
Final Development Plans
Situated In
City of Springboro, Warren County, Ohio

Sheet Title: Site Plan
Drawing No.: 308-343-2
Sheet No.: 2 of 19

N:\PROJ\308\308-343 Springboro\DWG\308-343SP.dwg Layout=2 Site Plan User=Alison McMonigle Plotted=6/19/2023 1:45 PM

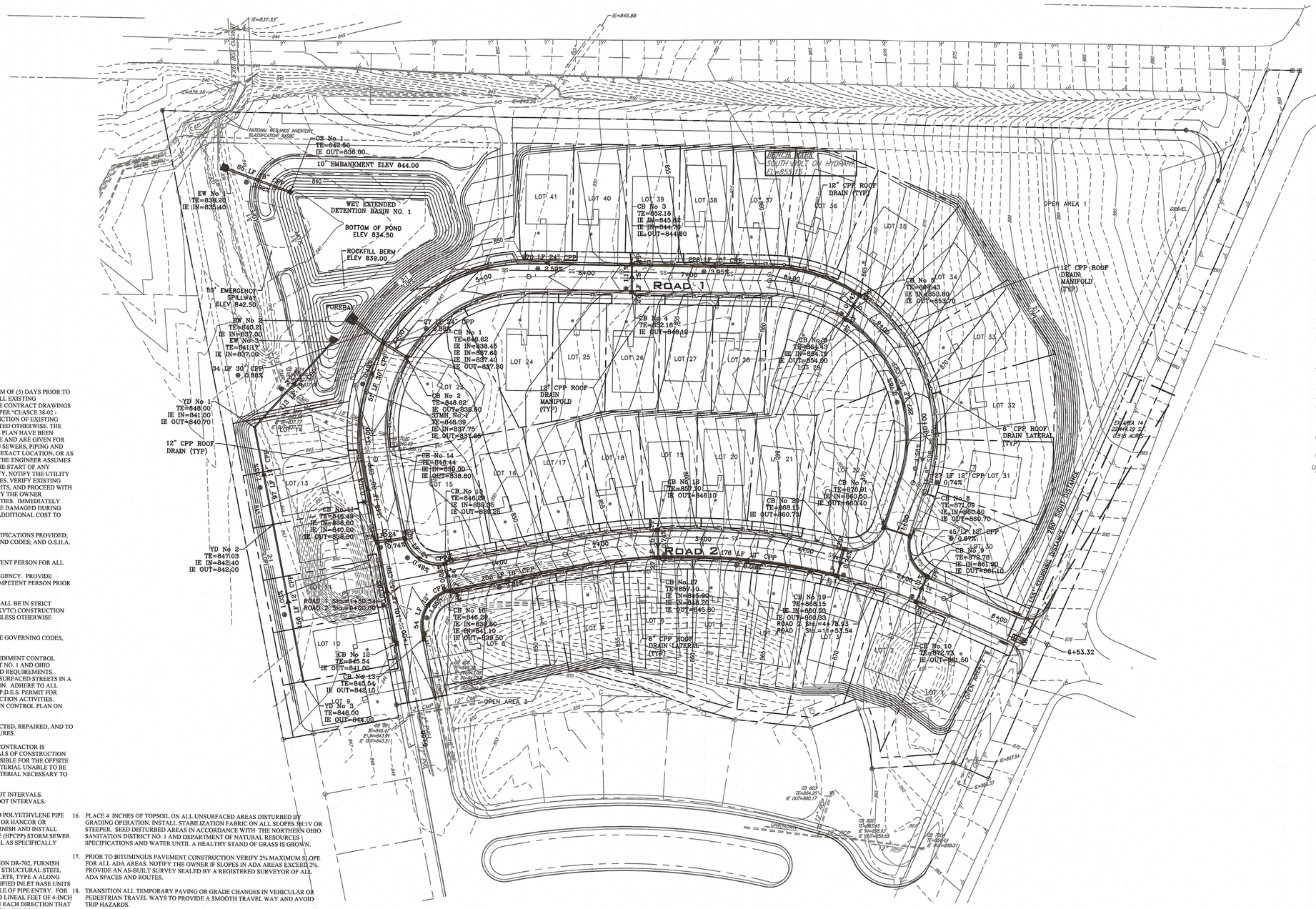

GRADING/DRAINAGE PLAN NOTES:

1. NOTIFY THE OHIO 811 AT (800) 752-6007 OR 811 A MINIMUM OF (5) DAYS PRIOR TO ANY DEMOLITION, EXCAVATION, OR CONSTRUCTION. ALL EXISTING SUBSURFACE UTILITY INFORMATION PRESENTED ON THE CONTRACT DRAWINGS IS CHARACTERIZED AS UTILITY QUALITY LEVEL C OR D PER "CI/ASCE 38-02 - STANDARD GUIDELINES FOR THE COLLECTION AND DEPICTION OF EXISTING SUBSURFACE UTILITY DATA" UNLESS SPECIFICALLY NOTED OTHERWISE. THE LOCATIONS OF ALL EXISTING UTILITIES SHOWN ON THIS PLAN HAVE BEEN DETERMINED FROM THE BEST INFORMATION AVAILABLE AND ARE GIVEN FOR THE CONVENIENCE OF THE CONTRACTOR. ALL EXISTING SEWERS, PIPING AND UTILITIES SHOWN ARE NOT TO BE INTERPRETED AS THE EXACT LOCATION, OR AS THE ONLY OBSTACLES THAT MAY OCCUR ON THE SITE. THE ENGINEER ASSUMES NO RESPONSIBILITY FOR THEIR ACCURACY. PRIOR TO THE START OF ANY DEMOLITION, EXCAVATION, OR CONSTRUCTION ACTIVITY, NOTIFY THE UTILITY COMPANIES FOR FIELD LOCATIONS OF EXISTING UTILITIES. VERIFY EXISTING CONDITIONS, LOCATE ALL UTILITIES BY DIGGING TEST PITS, AND PROCEED WITH CAUTION AROUND ANY ANTICIPATED FEATURES. NOTIFY THE OWNER IMMEDIATELY OF ANY CONFLICTS WITH EXISTING UTILITIES. IMMEDIATELY AND COMPLETELY REPAIR EXISTING UTILITIES THAT ARE DAMAGED DURING DEMOLITION, EXCAVATION, OR CONSTRUCTION AT NO ADDITIONAL COST TO THE OWNER.
2. ALL WORK AND MATERIALS TO COMPLY WITH ALL SPECIFICATIONS PROVIDED; LOCAL, COUNTY, STATE, AND FEDERAL REGULATIONS AND CODES; AND O.S.H.A. STANDARDS.
3. DESIGNATE AND MAINTAIN ON-SITE A TRAINED COMPETENT PERSON FOR ALL EXCAVATION WORK WHO SHALL BE ON CALL 24-HOURS-PER-DAY-7-DAYS-PER-WEEK IN CASE OF EMERGENCY. PROVIDE 24-HOUR CONTACT INFORMATION FOR THE TRAINED COMPETENT PERSON PRIOR TO ANY WORK.
4. ALL MATERIALS FURNISHED AND WORK COMPLETED SHALL BE IN STRICT ACCORDANCE WITH OHIO TRANSPORTATION CABINET (KYTC) CONSTRUCTION GUIDANCE MANUAL, SECTION CST-1300 AS AMENDED UNLESS OTHERWISE SPECIFIED.
5. PERFORM WORK IN ACCORDANCE WITH ALL APPLICABLE GOVERNING CODES, RULES, STANDARDS, AND REGULATIONS.
6. FURNISH, INSTALL, AND MAINTAIN ALL EROSION AND SEDIMENT CONTROL FACILITIES IN ACCORDANCE WITH SANITATION DISTRICT NO. 1 AND OHIO DEPARTMENT OF NATURAL RESOURCES STANDARDS AND REQUIREMENTS. INSTALL A ROCK CONSTRUCTION ENTRANCE AND KEEP SURFACED STREETS IN A CLEAN CONDITION AT ALL TIMES DURING CONSTRUCTION. ADHERE TO ALL TERMS & CONDITIONS AS OUTLINED IN THE GENERAL N.P.D.E.S. PERMIT FOR STORMWATER DISCHARGE ASSOCIATED WITH CONSTRUCTION ACTIVITIES. MAINTAIN A COPY OF THE EROSION AND SEDIMENTATION CONTROL PLAN ON SITE.
7. INSPECT EXISTING DRAINAGE STRUCTURES TO BE INSPECTED, REPAIRED, AND TO REMOVE ALL SILT AND DEBRIS FORM EXISTING STRUCTURES.
8. ALL EXCAVATION IS CONSIDERED UNCLASSIFIED. THE CONTRACTOR IS RESPONSIBLE FOR ALL MEANS, METHODS, AND MATERIALS OF CONSTRUCTION TO COMPLETE THE WORK. THE CONTRACTOR IS RESPONSIBLE FOR THE OFFSITE DISPOSAL OF ANY AND ALL EXCESS OR UNSUITABLE MATERIAL UNABLE TO BE PLACED ON SITE AND FOR IMPORTING ANY BORROW MATERIAL NECESSARY TO COMPLETE THE WORK.
9. EXISTING GRADE CONTOUR INTERVALS SHOWN AT 1 FOOT INTERVALS. PROPOSED GRADE CONTOUR INTERVALS SHOWN AT 2 FOOT INTERVALS.
10. FURNISH AND INSTALL SMOOTH INTERIOR CORRUGATED POLYETHYLENE PIPE (CPP) STORM SEWER PIPING AS MANUFACTURED BY ADS OR HANCOR OR APPROVED EQUAL, UNLESS OTHERWISE INDICATED. FURNISH AND INSTALL HIGH PERFORMANCE CORRUGATED POLYETHYLENE PIPE (HPCPP) STORM SEWER PIPING AS MANUFACTURED BY ADS OR APPROVED EQUAL AS SPECIFICALLY SPECIFIED ON THE PLANS.
11. IN ACCORDANCE WITH ODOT DRAINAGE MANUAL, SECTION DR-702, FURNISH AND INSTALL ODOT DOP BOX INLETS (TYPE 3 OR 4) WITH STRUCTURAL STEEL FRAMES WITHIN PAVED AREAS AND ODOT CURB BOX INLETS, TYPE A ALONG CURB LINES. FURNISH AND INSTALL STANDARD OR MODIFIED INLET BASE UNITS AS NECESSARY TO ACCOMMODATE PIPE SIZES AND ANGLE OF PIPE ENTRY. FOR EVERY INLET IN PAVED AREAS, FURNISH AND INSTALL 10 LINEAL FEET OF 4-INCH PERFORATED SCHEDULE 40 PVC RADIAL UNDERDRAIN IN EACH DIRECTION THAT IS UNDER SURFACES TO BE PAVED. INLET FRAMES AND GRATES TO BE INSTALLED TO MATCH SLOPE OF ADJACENT PAVEMENT PROFILE, CROSS SECTION AND ADJACENT ASPHALT PAVEMENT.
12. INSTALL STORM SEWER MANHOLES IN PAVED AREAS WITH TOP ELEVATIONS FLUSH WITH PAVEMENT. INSTALL MANHOLES IN UNPAVED AREAS WITH TOP ELEVATIONS 6" ABOVE FINISH GRADE, UNLESS OTHERWISE NOTED. INSTALL TRAFFIC BEARING RINGS & COVERS ON ALL STORM SEWER MANHOLES. COVERS SHALL BE LABELED "STORM SEWER".
13. CONTRACTOR TO INSTALL CLEANOUT AND TRAP ON ALL ROOF DRAIN DOWN SPOUTS. PLUMBING CONTRACTOR TO CONTACT THE NORTHERN OHIO SANITATION DISTRICT NO. 1 TO COORDINATE ALL REQUIRED PERMITS INSPECTIONS AND SPECIFIC CONSTRUCTION DETAILS ASSOCIATED WITH ROOF DRAIN CONNECTIONS TO THE SEWER SYSTEM.
14. ADJUST PROPOSED PAVEMENT AS NECESSARY TO ASSURE A SMOOTH FIT AND CONTINUOUS GRADE TO EXISTING PAVEMENT. ADJUST TOP ELEVATIONS OF EXISTING UTILITY STRUCTURES AND OTHER EXISTING AT-GRADE STRUCTURES TO REMAIN AS NECESSARY TO PROPOSED FINISHED GRADE AND PAVEMENT ELEVATIONS.
15. ADJUST GRADES AS NECESSARY TO ASSURE POSITIVE DRAINAGE AWAY FROM BUILDINGS AND TOWARD EXISTING OR PROPOSED STORM SEWER STRUCTURES FOR ALL PAVED AND UNPAVED AREAS. ADJUST GRADES AND INLET TOP ELEVATIONS AS NECESSARY TO PROVIDE POSITIVE DRAINAGE.
16. PLACE 4 INCHES OF TOPSOIL ON ALL UNSURFACED AREAS DISTURBED BY GRADING OPERATION. INSTALL STABILIZATION FABRIC ON ALL SLOPES 3H:1V OR STEEPER. SEED DISTURBED AREAS IN ACCORDANCE WITH THE NORTHERN OHIO SANITATION DISTRICT NO. 1 AND DEPARTMENT OF NATURAL RESOURCES \ SPECIFICATIONS AND WATER UNTIL A HEALTHY STAND OF GRASS IS GROWN.
17. PRIOR TO BITUMINOUS PAVEMENT CONSTRUCTION VERIFY 2% MAXIMUM SLOPE FOR ALL ADA AREAS, NOTIFY THE OWNER IF SLOPES IN ADA AREAS EXCEED 2%. PROVIDE AN AS-BUILT SURVEY SEALED BY A REGISTERED SURVEYOR OF ALL ADA SPACES AND ROUTES.
18. TRANSITION ALL TEMPORARY PAVING OR GRADE CHANGES IN VEHICULAR OR PEDESTRIAN TRAVEL WAYS TO PROVIDE A SMOOTH TRAVEL WAY AND AVOID TRIP HAZARDS.
19. COLLECT GROUNDWATER SEEPAGE, IF ENCOUNTERED DURING EXCAVATION, VIA UNDERDRAINS AND DISCHARGE TO THE STORM SEWER SYSTEM. AREAS OF DRAINAGE ENCOUNTERED SHALL BE DESIGNATED ON AS-BUILT PLANS.
20. OVEREXCAVATE EXISTING FILL MATERIAL CONTAINING ORGANIC MATERIAL AS DIRECTED BY THE GEOTECHNICAL ENGINEER AND REPLACE WITH COMPACTED SUITABLE FILL.
21. PARGE THE INTERIOR SURFACE OF ALL INLET STRUCTURES WITH PORTLAND CEMENT GROUT. GROUT ANNULAR SPACE AROUND STORM PIPES WHERE ENTERING STRUCTURES TO ASSURE WATER-TIGHT CONNECTION AT STRUCTURE. GROUT PIPES ON EXTERIOR OF STRUCTURES PRIOR TO BACKFILL AND ON THE INTERIOR OF STRUCTURES AFTER BACKFILL AND COMPACTION ARE COMPLETE.
22. THE GRADING PLAN HAS BEEN PREPARED BASED ON THE SUBSURFACE INVESTIGATION REPORT PREPARED BY ALT & WITZIG ENGINEERING, INC, DATED DECEMBER 23, 2019. CONTRACTOR TO REFER TO THE SUBSURFACE INVESTIGATION REPORT FOR ALL CONSTRUCTION DETAILS RELATED TO CUT AND FILL SLOPE AND STORMWATER DETENTION BASIN EMBANKMENTS. ENVIRONMENTAL OR GEOTECHNICAL REPORTS PROVIDED BY THE OWNER OR ENGINEER ARE FOR INFORMATION ONLY AND SHOULD NOT BE RELIED ON AND THE CONTRACTOR MUST MAKE HIS OWN INDEPENDENT VERIFICATION AS HE DETERMINES IS NECESSARY. CONDUCT ADDITIONAL TESTS DETERMINED NECESSARY FOR CONSTRUCTION OF THE IMPROVEMENTS AT NO ADDITIONAL COST TO THE OWNER.

0' 50' 100' 150'

EXISTING LEGEND

- CONTOUR (1-ft)
- 1270 CONTOUR (5-ft)
- CURB (Concrete)
- FP FENCELINE W/ POST
- GUIDERAIL
- LS LIGHT STANDARD
- MANHOLES: SANITARY, STORM, TELEPHONE, MISC.
- PAVEMENT EDGE
- DRIVE EDGE
- PROPERTY LINE (Municipal Boundary)
- PROPERTY LINE (Subject Parcel)
- PROPERTY LINE (Parcel)
- RIGHT-OF-WAY LINE
- EASEMENT LINE
- SETBACK LINE
- S SIGN
- DECIDUOUS TREE
- TREELINE
- BUSH
- UE UTILITY LINE (Electric)
- UT UTILITY LINE (Underground Telephone)
- FO UTILITY LINE (Fiber Optic)
- GB GM GLM GV UTILITY LINE (Gas) W/ BOX, METER, MARKER, AND VALVE
- 8" PVC UTILITY LINE (Sanitary Sewer) W/ MANHOLES
- 15" CPP UTILITY LINE (Storm Sewer) W/ CATCH BASIN AND MANHOLE
- UP OHW GW UTILITY LINE (Telephone) W/ POLE, OVERHEAD WIRE AND GUY WIRE
- WB WM WV UTILITY LINE (Water) W/ BOX, METER, HYDRANT AND VALVE
- HYD
- 49 B-II EXCEPTION
- EXISTING WETLAND

PROPOSED LEGEND

- PROPOSED STREET LIGHT STANDARD
- 1140 CONTOUR (5-ft)
- CONTOUR (1-ft)
- PROPERTY LINE (PARCEL)
- PROPERTY LINE (R.O.W.)
- PROPERTY LINE (EASEMENT)
- PROPERTY LINE (SETBACK)
- CENTERLINE
- PROPOSED CONCRETE CURB AND GUTTE
- 18" CPP UTILITY LINE (Storm) W/ CATCH BASIN AND MANHOLE
- UTILITY LINE (Roof Drain)

STATE OF OHIO JOHN HEYL E-88187 REGISTERED PROFESSIONAL ENGINEER

Scale:	No.	Date	Description	By	No.	Date	Description	By	No.	Date	Description	By
Drawn By / Checked By / Approved By												

LSSE Civil Engineers and Surveyors
5980 Wilcox Place, Suite J
Dublin, Ohio 43016
Phone: (614) 395-1661
Corporate: (412) 264-4400
email: info@lsse.com

Filename: 308-343GP.dwg
Date: May 2023

Maronda Homes
5900 Wilcox Place
Dublin, Ohio 43016

Clearview Crossing
at Stone Ridge
Final Development Plans
Situated In
City of Springboro, Warren County, Ohio

Sheet Title: Grading Plan
Drawing No.: 308-343-3
Sheet No.: 3 of 19

N:\PROJ\308\308-343 Springboro\DWG\308-343GP.dwg Layout=3 Grading Plan User=Jason Millspaugh PlotDate=6/7/2023 1:45 PM

THE FOLLOWING GENERAL NOTES ARE INCIDENTAL ITEMS OF CONSTRUCTION WORK AND AS SUCH ARE SUBSIDIARY ITEMS OF COST WHICH SHALL BE INCLUDED IN THE UNIT PRICE BID. THESE GENERAL NOTES SUPPLEMENT, BUT DO NOT OVERRULE OR PRECLUDE COMPLIANCE WITH THE TECHNICAL SPECIFICATIONS. REFER TO NORTHERN KENTUCKY WATER DISTRICT STANDARD DRAWINGS AND SPECIFICATIONS.

GENERAL NOTES
WATERLINES

1. **UTILITY CONFLICTS:** Verify All Existing Utilities In The Field Prior To Start Of Excavation Work. Comply With One Call Requirements. Contact All Utility Companies That May Have Facilities Within The Work Area. For This Contract All Existing Subsurface Utility Information Presented On The Contract Drawings Is Characterized As "ASCE - Standard Guideline For The Collection And Depiction Of Existing Subsurface Utility Data CI/ASCE 38-02" Utility Quality Level C Or D Unless Specifically Noted Otherwise.

2. **PREPARATORY SURVEYS:** The Construction Plans are Based on Aerial Photogrammetry. As Such the Horizontal and Vertical Accuracy are Based on National Map Accuracy Standards as Published by USGS Fact Sheet FS-171-99 (November 1999). Vertical Accuracy is Typically One Half (1/2) the Contour Interval. Horizontal Accuracy is a Function of Scale. Note and Report to the Engineer Any Material Discrepancies Discovered in Performing Layout Surveys and Field Engineering. Field Check And Verify Benchmark Elevations For All Work Before Start Of Construction. Set/Adjust Final Alignment For Proposed Waterlines And Service Lines After All Existing Utilities And Other Obstructions Have Been Located By Test Holes. Dig All Necessary Test Holes To Locate Any Existing Utilities That May Be In Conflict With The Alignment Of The Proposed Waterlines Or Service Lines. Meet All Existing Conditions And Grades Along The Route Of The Proposed Waterlines.

3. **MAINLINE ALIGNMENT FITTING LOCATION and depth:** The Alignment Of The Proposed Waterlines, And Locations Of The Proposed Tees, Bends, Hydrants And Fittings Shown On The Drawings, Are Illustrative. The Final Constructed Alignment Of The Mainline May Be Modified In The Field Subject To Prior Approval Of The Engineer. Maintain A Minimum Thirty-Six Inches (36") Cover Above Pipe. Deepen As Required To Avoid Obstructions And /Or To Maintain Continuous Up-Grade To All High Points. Adjust Location To Set Hydrants As Close To High Points As Practical. Maintain At Least Ten Feet (10') Horizontal Separation From Sanitary Sewers In Parallel And Eighteen Inches (18") Vertical For All Crossings.

4. **UNCLASSIFIED EXCAVATION:** All Excavation Is Unclassified. No Extra Payment Will Be Made For Rock Or Any Other Material Encountered In Construction At The Location Shown On The Drawing Or Any Horizontal Or Vertical Relocation Of The Proposed Waterlines On This Project.

5. **COMPETENT PERSON:** Designate And Maintain On-Site A Trained Competent Person For All Excavation Work.

6. **TRAFFIC:** Maintain And Protect Traffic During Construction. Coordinate All Work With Local Emergency Response And Transportation Agencies. Provide All Required Signage For Temporary Traffic Control. Maintain All Roads, Sidewalks, Steps And Traveled Ways Clean, Free Of Mud Or Dust, And In A Condition Usable By Residents In The Area During Construction. Maintain Access To All Residential And Commercial Driveways During Construction.

7. **EXISTING WATER MAINS:** Maintain All Existing Waterlines In Service During Construction. Contact Owner Prior To Making Any Connections To The System Or Operating Any Valves To Ascertain That Work Will Not Interfere With Or Otherwise Compromise System Operation Coordinate All Work With Owner.

8. **RIGHTS OF ACCESS:** Take Note That All R/W And Property Lines Shown On The Drawings Are Approximate. Confine All Activity To Authorized Rights-Of-Way. When In Doubt, Verify With Owner.

9. **E & S CONTROL:** Implement And Maintain An Erosion And Sedimentation Control Plan.

10. **MEASUREMENT:** All Waterline Stationing And Payment Is Determined On The Basis Of Horizontal Measurement.

11. **RESTORATION:** Restore All Private Property Disturbed By Construction Activities Within Two Weeks Of Construction Work. Replace Mailboxes And Driveway Cross Drains Immediately. Restore Yard Areas Which Are Disturbed As A Result Of The Work With Four Inches (4") Of Topsoil, Seeded, And Mulched Per Technical Specifications. Adjust All Existing And New Inlets, Manholes, Valve Boxes, Curb Boxes And All Other Similar Items Located Within The New Paved Areas As Required To Match Final Paving Grade Tilt As Required With Approved Spacers To Match. Provide Minimum Two Inch (2") Depth Asphalt Cold Patch With Eighteen Inch (18") 2a Stone Interim Trench Cap In All Roadways.

12. **ANCHORING AND BLOCKING:** Install All Required Anchoring And Concrete Blocking At All Bends And Similar Fittings. Provide Cast-In-Place Concrete Blocking. Follow Detail Drawings. Do Not Bury Fittings In Concrete. Where Ground Conditions Are Not Suited To Concrete Anchors, Provide Self-Restrained Anchor Type Pipe And Fittings.

13. **RECORDS:** Maintain Daily As-Built Record Information Including Valve Stationing And Triangulate All Curb Boxes, Valve Boxes, and Blow-offs, And Show Dimensions On Record Drawings. Furnish Owners' Representative Copies Of All Delivery Slips For All Materials Delivered To The Project.

14. **PROJECT COORDINATION:** Coordinate And Schedule All Work As Required With Other Contractors, Local, Municipal Or State Government Agencies.

15. **PIPELINE TESTING:** Pipeline Acceptance Testing Includes: Pressure Testing At 1.5 Times Average Working Pressure, Or At Least 50 Psig Above Average Working Pressure, Microbiological Testing, Chlorine Residual, And Sonic/Noise Testing Of All Valves, Hydrants And Curb Box Corporations After System Is On-Line.

16. **OPEN EXCAVATIONS:** Protect Public At All Times From All Open Excavation. Cover All Open Excavation With Suitable Steel Plates At The End Of Each Workday.

17. **BACKFILL:** TRENCH BACKFILL REQUIREMENTS

PIPE ZONE:
PVC Pipe Full Stone Bedding [AASHTO 57 Crushed Aggregate (No Slag)]
D.I. and RCCP Stone Bedding [AASHTO 57 Crushed Aggregate (No Slag)]
Wrap All D.I. Pipe with 2-ply Cross Laminated High Density Polyethylene

Intermediate Zone:
Improved Areas Full Trench Stone Vibratory Compact in Maximum 6" Lifts
Unimproved Areas Select Backfill Vibratory Compact in Maximum 6" Lifts

FINAL ZONE:
As Specified

18. **HYDRANT:** Furnish Hydrant Hose And Pumper Thread Connections Complying With Local Fire Company Standard. Verify Thread Compliance Prior To Delivery And Installation.

19. **HYDRANT REMOVAL CUT /PLUG WATERLINES:** Cut And Plug All Existing Waterlines To Be Taken Out Of Service At Locations As Shown On The Drawings Or As Directed By The Owner. Plug With Mechanical Joint Plug And Concrete Blocking. Remove Noted Hydrants To Minimum Three Foot (3') Below Grade. Plug Inlet Pipes As Directed. Backfill To Grade With Suitable Material. Restore All Improved Surfaces With Like Surface. Return Hydrant And Valves To Owner.

20. **DISPOSAL OF DISINFECTION SOLUTION:** Dispose of Water Used To Disinfect Installed Water Mains In Accordance With Regulatory Agency Requirements. Confirm Requirements Prior To Discharge.

21. **CROSSOVERS:** Crossovers are needed by Direction of Inspector. If Crossovers are Installed, They Need to be on the Opposite Property Line of Electric Transformers.

THE FOLLOWING GENERAL NOTES ARE INCIDENTAL ITEMS OF CONSTRUCTION WORK AND AS SUCH ARE SUBSIDIARY ITEMS OF COST WHICH SHALL BE INCLUDED IN THE UNIT PRICE BID. THESE GENERAL NOTES SUPPLEMENT, BUT DO NOT OVERRULE OR PRECLUDE COMPLIANCE WITH THE TECHNICAL SPECIFICATIONS. THE CONTRACTOR SHALL BE OBLIGATED TO COMPLY WITH THESE ITEMS.

GENERAL NOTES
STORM SEWERS

1. **Utility Conflicts:** Verify All Existing Utilities In The Field Prior To Start Of Excavation Work. Comply With One Call Requirements. Contact All Utility Companies That May Have Facilities Within The Work Area. For This Contract All Existing Subsurface Utility Information Presented On The Contract Drawings Is Characterized As "ASCE - Standard Guideline For The Collection And Depiction Of Existing Subsurface Utility Data CI/ASCE 38-02" Utility Quality Level C Or D Unless Specifically Noted Otherwise.

2. **PREPARATORY SURVEYS:** The Construction Plans are Based on Aerial Photogrammetry. As Such the Horizontal and Vertical Accuracy are Based on National Map Accuracy Standards as Published by USGS Fact Sheet FS-171-99 (November 1999). Vertical Accuracy is Typically One Half (1/2) the Contour Interval. Horizontal Accuracy is a Function of Scale. Note and Report to the Engineer Any Material Discrepancies Discovered in Performing Layout Surveys and Field Engineering. Field Check And Verify Benchmark Elevations For All Work Before Start Of Construction. Verify All Existing Storm Sewer Inverts And Confirm Storm Sewer Grades Prior To Initiation Of Construction. Prepare And Submit Cut Sheet Survey. Set/Adjust Final Grades For Proposed Storm Sewer Lines After All Existing Utilities And Other Obstructions Have Been Located By Test Holes. Dig All Necessary Test Holes To Locate Any Existing Utilities That May Be In Conflict With The Alignment And Grade Of The Proposed Storm Sewer, Relocate Any Existing Utilities Eight Inch (8") Diameter And Smaller That Are In Conflict With The Proposed Sewers. Meet All Existing Conditions And Grades Along The Route Of The Proposed Sewer Lines.

3. **MAINLINE ALIGNMENT:** The Alignment Of The Proposed Storm Sewers And Locations Of The Proposed Inlets And Manholes Shown On The Drawings Are Illustrative. The Final Constructed Alignment Of The Mainline May Be Modified In The Field Subject To Prior Approval Of The Engineer And Preservation Of Design Depth And Pipeline Grade.

4. **UNCLASSIFIED EXCAVATION:** All Excavation Shall Be Unclassified. No Extra Payment Will Be Made For Rock Or Any Other Material Encountered In Construction At The Location Shown On The Drawing Or Any Horizontal Or Vertical Relocation Of The Proposed Sewer Lines On This Project.

5. **COMPETENT PERSONS/SAFETY INSPECTOR:** Contractor Shall Designate And Maintain On-Site A Trained Competent Person/Safety Inspector For All Excavation Work. Said Competent Person/Safety Inspector Shall Have Sole Responsibility For All Aspects Of Project Safety Including Trench Shoring/Stability.

6. **TRAFFIC:** Maintain And Protect Traffic During Construction. Coordinate All Work With Local Emergency Response And Transportation Agencies. Provide All Required Signage For Temporary Traffic Control. Maintain All Roads, Sidewalks, Steps And Traveled Ways Clean, Free Of Mud Or Dust, And In A Condition Usable By Residents In The Area During Construction. Maintain Access To All Driveways During Construction.

7. **EXISTING SEWERS:** Maintain All Existing Sanitary Sewers In Service During Construction. Contain Sanitary Sewage To Sanitary Sewers. Do Not Discharge To The Ground Surface Or To Ground Waters.

8. **RIGHTS OF ACCESS:** Take Note That All R/W And Property Lines Shown On The Drawings Are Approximate. All Activity Shall Be Confined To Authorized R/Ws. When In Doubt, Verify With Owner.

9. **E & S CONTROL:** Implement And Maintain An Erosion And Sedimentation Control Plan.

10. **MEASUREMENT:** All Sewer Line Stationing And Payment Is Determined On The Basis Of Horizontal Measurement. For Payment Purposes, Mainline Measurement Shall Exclude Manholes And Wyes Where Such Are Paid Separately. Where Pay Items Are Based On Depth As Well As Length Pay Depth (Grade To Pipe Invert) Shall Be Established By Cut-Sheet Survey Prior To Construction. Where Manholes Are Paid By Vertical Feet, Measurement Begins At The Top (First Joint) Of The Base Section And Ends At The Bottom Of The Cast Iron Frame.

11. **RESTORATION:** Restore All Private Property Disturbed By Construction Activities Within Two Weeks Of Construction Work. Private Property Shall Include, But Is Not Limited To: Buildings, Sheds, Structures, Landscaping, Lighting Appurtenances, Bushes, Hedges, Fences, Walls, Etc. All Private Property Removed, Disturbed, And/Or Damaged By Construction Activities Shall Be Replaced In-Kind And Restored To Original Or Improved Conditions At The Contractor Expense. Replace Mailboxes And Driveway Cross Drains Immediately. Restore Yard Areas Which Are Disturbed As A Result Of The Work With Four Inches (4") Of Topsoil, Seeded, And Mulched Per Technical Specifications. Replace All Gravel Drives With Similar Materials To A Depth Equal To Which Is Found. Adjust All Existing And New Inlets, Manholes, Valve Boxes, Curb Boxes And All Other Similar Items Located Within The New Paved Areas As Required To Match Final Paving Grade Tilt As Required With Approved Spacers To Match. Provide Minimum Two Inch (2") Depth Asphalt Cold Patch With Eighteen Inch (18") 2a Stone Interim Trench Cap In All Roadways.

12. **DEMOLITION:** Cut And Plug All Existing Sanitary Sewer Lines To Be Taken Out Of Service At Locations As Shown On The Drawings Or As Directed By The Owner. Plug With Suitable Waterproof Non-Shrink Grout At Least One Foot (1') Into Pipe. Remove Noted Manholes To Minimum Three Foot (3') Below Grade Plug Inlet And Outlet Pipes As Directed. Backfill To Grade With Suitable Material. Return Castings To Owner.

13. **RECORDS:** Maintain Daily As-Built Record Information Including Wye Stationing. Give Owners' Representative Copies Of All Delivery Slips For All Materials Delivered To The Project.

14. **PROJECT COORDINATION:** Coordinate And Schedule All Work As Required With Other Contractors, Local, Municipal Or State Government Agencies.

15. **PIPELINE TESTING:** Pipeline Acceptance Testing Shall Include Mandrel And Full Moon Spot Light.

16. **OPEN EXCAVATIONS:** Protect Public At All Times From All Open Excavation. Cover All Open Excavation With Suitable Steel Plates At The End Of Each Workday.

17. **BACKFILL:** Trench Backfill Requirements

PIPE ZONE:
PVC Pipe Full Stone Bedding [AASHTO 57 Crushed Aggregate (No Slag)]
D.I. and RCCP Stone Bedding [AASHTO 57 Crushed Aggregate (No Slag)]
Wrap All D.I. Pipe with 2-ply Cross Laminated High Density Polyethylene

Intermediate Zone:
Improved Areas Full Trench Stone Vibratory Compact in Maximum 6" Lifts
Unimproved Areas Select Backfill Vibratory Compact in Maximum 6" Lifts

FINAL ZONE:
As Specified

18. REFER TO THE GEOTECHNICAL INVESTIGATION REPORT, PREPARED BY PSI AN INTERTEK COMPANY

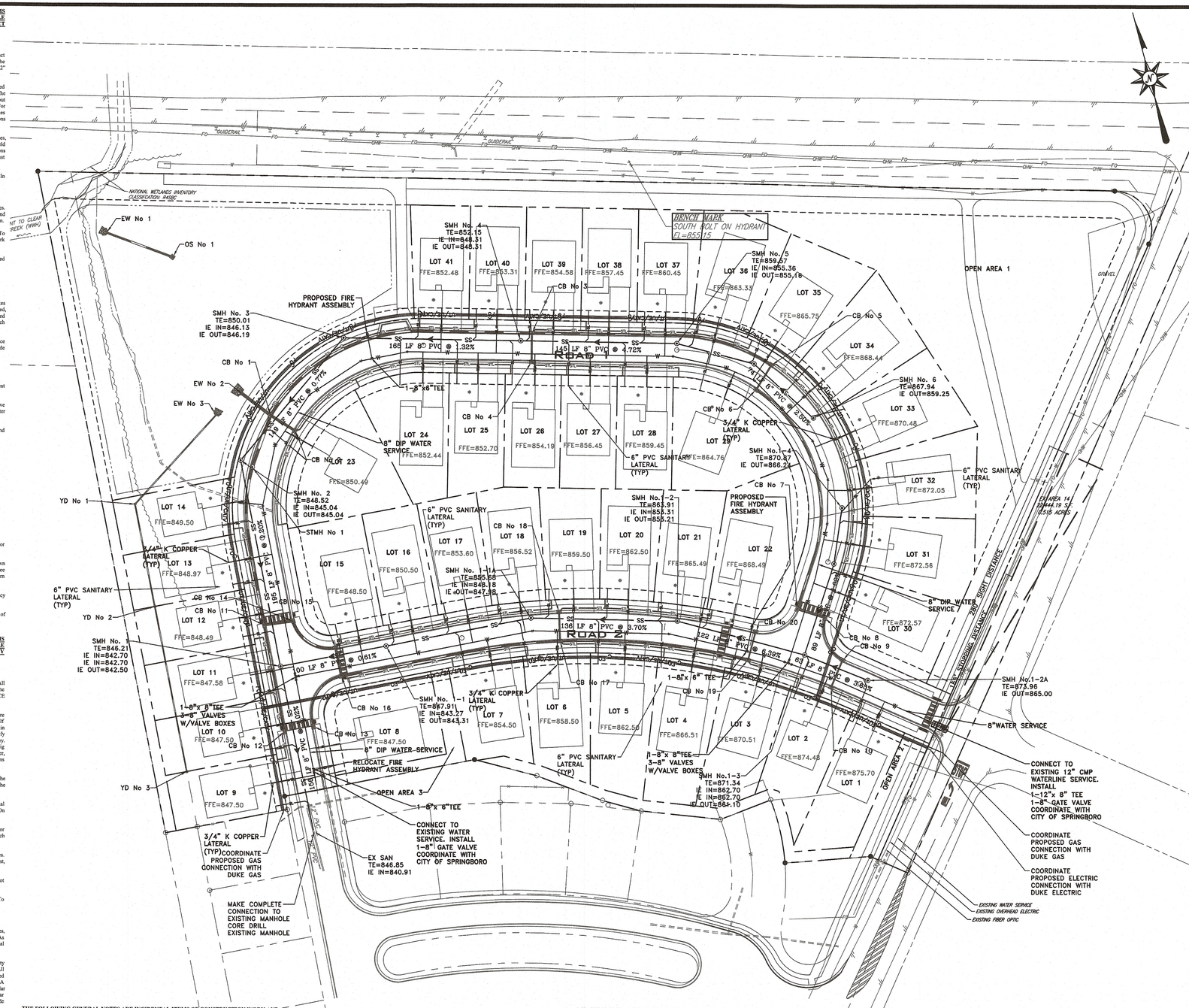

EXISTING LEGEND

CONTOUR (1-ft)
1270 CONTOUR (5-ft)
CURB (Concrete)
FP FENCELINE W/ POST
GUIDERAIL
LS LIGHT STANDARD
MANHOLES: SANITARY, STORM, TELEPHONE, MISC
PAVEMENT EDGE
DRIVE EDGE
PROPERTY LINE (Municipal Boundary)
PROPERTY LINE (Subject Parcel)
PROPERTY LINE (Parcel)
RIGHT-OF-WAY LINE
EASEMENT LINE
SETBACK LINE
SIGN
DECIDUOUS TREE
TREELINE
BUSH
UE UTILITY LINE (Electric)
UT UTILITY LINE (Underground Telephone)
FO UTILITY LINE (Fiber Optic)
CB GM GLM GV UTILITY LINE (Gas) W/ BOX, METER, MARKER, AND VALVE
8" PVC UTILITY LINE (Sanitary Sewer) W/ MANHOLES
15" CPP UTILITY LINE (Storm Sewer) W/ CATCH BASIN AND MANHOLE
UP GW UTILITY LINE (Telephone) W/ POLE, OVERHEAD WIRE AND GUY WIRE
WB WM WV UTILITY LINE (Water) W/ BOX, METER, HYDRANT AND VALVE
HYD

PROPOSED LEGEND

PROPOSED STREET LIGHT STANDARD
CONTOUR (10-ft)
CONTOUR (2-ft)
PROPERTY LINE (PARCEL)
PROPERTY LINE (R.O.W.)
PROPERTY LINE (EASEMENT)
PROPERTY LINE (SETBACK)
CENTERLINE
PROPOSED CURB AND GUTTER
UTILITY LINE (Storm) W/ CATCH BASIN AND MANHOLE
UTILITY LINE (Roof Drain)
SS UTILITY LINE (Sanitary) W/ CLEAN OUT AND MANHOLE
UTILITY LINE (Sanitary Lateral) W/ GRINDER PUMP
W UTILITY LINE (Water) W/ VALVE, AND HYDRANT
UTILITY LINE (Water Lateral)
UT/UE/CATV UTILITY LINE (Underground Telephone and Electric)
G UTILITY LINE (Gas Line)

THE FOLLOWING GENERAL NOTES ARE INCIDENTAL ITEMS OF CONSTRUCTION WORK AND AS SUCH ARE SUBSIDIARY ITEMS OF COST WHICH SHALL BE INCLUDED IN THE UNIT PRICE BID. THESE GENERAL NOTES SUPPLEMENT, BUT DO NOT OVERRULE OR PRECLUDE COMPLIANCE WITH THE TECHNICAL SPECIFICATIONS.

GENERAL NOTES
SANITARY SEWERS

UTILITY CONFLICTS: Verify All Existing Utilities In The Field Prior To Start Of Excavation Work. Comply With One Call Requirements. Contact All Utility Companies That May Have Facilities Within The Work Area. For This Contract All Existing Subsurface Utility Information Presented On The Contract Drawings Is Characterized As "ASCE - Standard Guideline For The Collection And Depiction Of Existing Subsurface Utility Data CI/ASCE 38-02" Utility Quality Level C Or D Unless Specifically Noted Otherwise.

1. **PREPARATORY SURVEYS:** The Construction Plans are Based on Aerial Photogrammetry. As Such the Horizontal and Vertical Accuracy are Based on National Map Accuracy Standards as Published by USGS Fact Sheet FS-171-99 (November 1999). Vertical Accuracy is Typically One Half (1/2) the Contour Interval. Horizontal Accuracy is a Function of Scale. Note and Report to the Engineer Any Material Discrepancies Discovered in Performing Layout Surveys and Field Engineering. Field Check And Verify Benchmark Elevations For All Work Before Start Of Construction. Verify All Existing Sanitary Sewer Inverts And Confirm Sanitary Sewer Grades Prior To Initiation Of Construction. Prepare And Submit Cut Sheet Survey. Set/Adjust Final Grades For Proposed Sanitary Sewer Lines And Service Lines After All Existing Utilities And Other Obstructions Have Been Located By Test Holes. Dig All Necessary Test Holes To Locate Any Existing Utilities That May Be In Conflict With The Alignment And Grade Of The Proposed Sanitary Sewer Or Sanitary Sewer Service Lines, Relocate Any Existing Utilities Smaller Than Eight Inch (8") Diameter That Are In Conflict With The Proposed Sewers. Meet All Existing Conditions And Grades Along The Route Of The Proposed Sewer Lines.

2. **MAINLINE ALIGNMENT:** The Alignment Of The Proposed Sanitary Sewers And Locations Of The Proposed Manholes, Wyes And Sight/Test Tees Shown On The Drawings Are Illustrative. The Final Constructed Alignment Of The Mainline May Be Modified In The Field Subject To Prior Approval Of The Engineer And Preservation Of Design Depth And Pipeline Grade.

3. **SERVICE LINE LOCATIONS:** Set The Actual Location, Pipeline Stationing, Elevation And The Termination Of All Sanitary Sewer Service Lines At The Time Of Construction To Best Accommodate Each Structure To Be Served. For New Service Line Installations And Existing Reconnections, Perform All Required Preparatory Work Including Digging Any Required Test Holes To Confirm Or Establish Final Connection Or Reconnection Point.

4. **UNCLASSIFIED EXCAVATION:** All Excavation Is Unclassified. No Extra Payment Will Be Made For Rock Or Any Other Material Encountered In Construction At The Location Shown On The Drawing Or Any Horizontal Or Vertical Relocation Of The Proposed Sewer Lines On This Project.

5. **COMPETENT PERSON/SAFETY INSPECTOR:** Designate And Maintain On-Site A Trained Competent Person/Safety Inspector For All Excavation Work.

6. **TRAFFIC:** Maintain And Protect Traffic During Construction. Coordinate All Work With Local Emergency Response And Transportation Agencies. Provide All Required Signage For Temporary Traffic Control. Maintain All Roads, Sidewalks, Steps And Traveled Ways Clean, Free Of Mud Or Dust, And In A Condition Usable By Residents In The Area During Construction. Maintain Access To All Residential and Commercial Driveways During Construction.

7. **EXISTING SEWERS:** Maintain All Existing Sanitary Sewers In Service During Construction. Contain Sanitary Sewage To Sanitary Sewers. Do Not Discharge To Or Groundwaters. Provide By-Pass Pumping As Required To Maintain Sanitary Sewage To Sanitary Sewers.

8. **RIGHTS OF ACCESS:** Take Note That All R/W And Property Lines Shown On The Drawings Are Approximate. Confine All Activity To Authorized Rights-Of-Ways. When In Doubt, Verify With Owner.

9. **E & S CONTROL:** Implement And Maintain An Erosion And Sedimentation Control Plan.

10. **MEASUREMENT:** All Sewer Line Stationing And Payment Is Determined On The Basis Of Horizontal Measurement. For Payment Purposes, Mainline Measurement Excludes Manholes And Wyes Where Such Are Paid Separately. Where Pay Items Are Based On Depth As Well As Length, Establish Pay Depth (Grade To Pipe Invert) By Cut-Sheet Survey Prior To Construction. Where Manholes Are Paid By Vertical Feet, Measurement Begins At The Top (First Joint) Of The Base Section And Ends At The Bottom Of The Cast Iron Frame.

11. **RESTORATION:** Restore All Private Property Disturbed By Construction Activities Within Two Weeks Of Construction Work. Replace Mailboxes And Driveway Cross Drains Immediately. Restore Yard Areas Which Are Disturbed As A Result Of The Work With Four Inches (4") Of Topsoil, Seeded, And Mulched Per Technical Specifications. Adjust All Existing And New Inlets, Manholes, Valve Boxes, Curb Boxes And All Other Similar Items Located Within The New Paved Areas As Required To Match Final Paving Grade Tilt As Required With Approved Spacers To Match. Provide Minimum Two Inch (2") Depth Asphalt Cold Patch With Eighteen Inch (18") 2a Stone Interim Trench Cap In All Roadways.

12. **DEMOLITION:** Cut And Plug All Existing Sanitary Sewer Lines To Be Taken Out Of Service At Locations As Shown On The Drawings Or As Directed By The Owner. Plug With Suitable Waterproof Non-Shrink Grout At Least One Foot (1') Into Pipe. Remove Noted Manholes To Minimum Three Foot (3') Below Grade Plug Inlet And Outlet Pipes As Directed. Backfill To Grade With Suitable Material. Return Castings To Owner. Grout All Abandoned Sewers Solidly In Place.

13. **RECORDS:** Maintain Daily As-Built Record Information Including Wye Stationing And Triangulate All Site Tees and Curb Boxes And Show Dimensions On Record Drawings. Give Owners' Representative Copies Of All Delivery Slips For All Materials Delivered To The Project.

14. **PROJECT COORDINATION:** Coordinate And Schedule All Work As Required With Other Contractors, Local, Municipal Or State Government Agencies.

15. **PIPELINE TESTING:** Pipeline Acceptance Testing Includes; Low Pressure (5 Psig For 5 MIN.), Mandrel, Full Moon Spot Light, And Manhole Vacuum Testing. Low Pressure Test Service Lines Simultaneously With Main Line.

16. **OPEN EXCAVATIONS:** Protect Public At All Times From All Open Excavation. Cover All Open Excavation With Suitable Steel Plates At The End Of Each Workday.

17. **BACKFILL:** Trench Backfill Requirements

PIPE ZONE:
PVC Pipe Full Stone Bedding [AASHTO 57 Crushed Aggregate (no Slag)] and RCCP Stone Bedding [AASHTO 57 Crushed Aggregate (no Slag)]
Wrap All D.I. Pipe with 2-ply Cross Laminated High Density Polyethylene

Intermediate Zone:
Improved Areas Full Trench Stone Vibratory Compact in Maximum 6" Lifts
Unimproved Areas Select Backfill Vibratory Compact in Maximum 6" Lifts

FINAL ZONE:
As Specified

18. **ANCHOR COLLARS: Anchor collars will be installed for section of pipe with a 40% slope or greater. This section will be anchored per SD1 requirements.**

(8.1.1) ALL UNDERGROUND UTILITY LINES SHOULD CROSS BENEATH DUKE ENERGY'S PIPELINES AND SHALL HAVE A MINIMUM OF TWENTY-FOUR INCHES OF VERTICAL CLEARANCE. DESPITE ANY AGREEMENT TO ALLOW A FOREIGN LINE TO CROSS OVER OR UNDER DUKE ENERGY'S PIPELINES, THE OWNER OF THE FOREIGN LINE SHALL BEAR ALL COSTS OF REMOVING IT'S LINE, IF AT ANY FUTURE DATE DUKE ENERGY DEEMS THE REMOVAL OR OTHER ACCOMMODATIONS NECESSARY FOR THE OPERATION, MAINTENANCE OR CONSTRUCTION OF DUKE ENERGY'S FACILITIES.

(8.3.2) ALL BURIED FIBER OPTIC AND ELECTRICAL CABLES EXCEPT 24-VOLT DC POWER LINES CROSSING DUKE ENERGY'S FACILITIES SHALL BE INSTALLED IN EITHER (1) COATED RIGID STEEL CASING (MINIMUM OF SCHEDULE 40) OR (2) PVC PIPE (MINIMUM OF SCHEDULE 80) COVERED BY A MINIMUM OF 6" OF CONCRETE FOR THE FULL WIDTH OF THE ROW.

(8.3.4) ALL BURIED PLASTIC COMBUSTIBLE MATERIAL LINES CROSSING DUKE ENERGY'S FACILITIES SHALL BE INSTALLED IN EITHER (1) COATED RIGID STEEL CASING (MINIMUM OF SCHEDULE 40) FOR THE FULL WIDTH OF THE ROW OR (2) PVC PIPE (MINIMUM OF SCHEDULE 80) COVERED BY A MINIMUM OF 6" OF CONCRETE FOR THE FULL WIDTH OF THE ROW. THE AREA ENGINEER CAN APPROVE THE FINAL CASING DESIGN.

STATE OF OHIO
JOHN HEYL
E-88187
REGISTERED
PROFESSIONAL ENGINEER

0' 50' 100' 150'

Scale:	Drawn By	Checked By	Approved By
1"=50'			

No.	Date	Description	By

No.	Date	Description	By

No.	Date	Description	By

LSSE Civil Engineers and Surveyors
5980 Wilcox Place, Suite J
Dublin, Ohio 43016
Phone: (614) 395-1661
Corporate: (412) 264-4400
email: info@lsse.com

Filename: 308-343UP.dwg
Date: May 2023

Maronda Homes
5900 Wilcox Place
Dublin, Ohio 43016

Clearview Crossing
at Stone Ridge
Final Development Plans
Situated In
City of Springboro, Warren County, Ohio

Sheet Title: Utility Plan
Drawing No. 308-343-4
Sheet No. 4 of 19

N:\PROJ\308\308-343 Springboro\DWG\308-343UP.dwg Layout=2 Utility Plan User=Joeen Mattonge Plotted=5/12/2023 1:45 PM

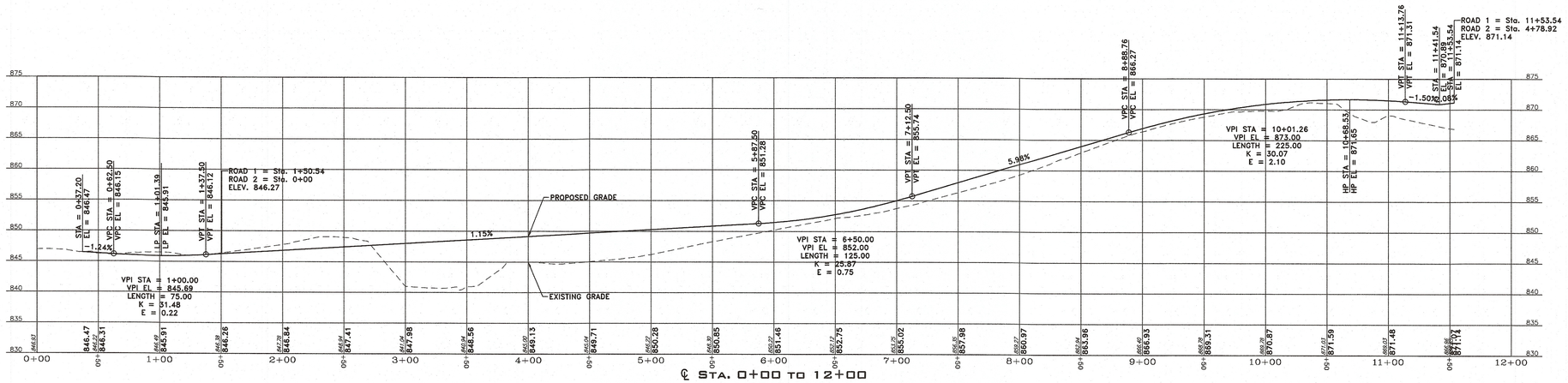

℄ STA. 0+00 TO 12+00
ROAD 1
Horiz: 1"=50'
Vert: 1"=10'

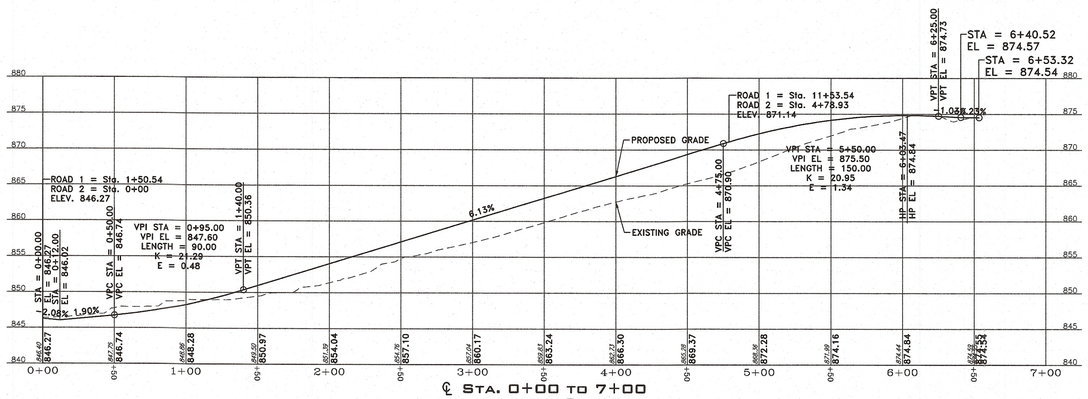

℄ STA. 0+00 TO 7+00
ROAD 2
Horiz: 1"=50'
Vert: 1"=10'

STATE OF OHIO
JOHN HEYL
E-88187
REGISTERED
PROFESSIONAL ENGINEER

Scale: H: 1"=50' V: 1"=10'	Drawn By	Checked By	Approved By

No.	Date	Description	By

No.	Date	Description	By

No.	Date	Description	By

LSSE
Civil Engineers and Surveyors
5980 Wilcox Place, Suite J
Dublin, Ohio 43016
Phone: (614) 395-1661
Corporate: (412) 264-4400
email: info@lsse.com

Filename: 308-343GP.dwg
Date: May 2023

Maronda Homes
5900 Wilcox Place
Dublin, Ohio 43016

Clearview Crossing
at Stone Ridge
Final Development Plans
Situated in
City of Springboro, Warren County, Ohio

Sheet Title: Road Profiles
Drawing No.: 308-343-5
Sheet No.: 5 of 19

N:\PROJ\308\308-343 Springboro\DWG\308-343GP.dwg Layout=4 Road Profiles User=Jason McMonigle Plotted=6/15/2023 1:46 PM

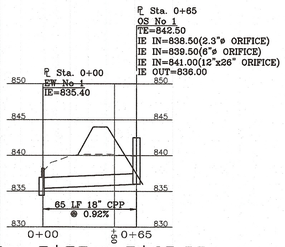

℄ Sta. 0+00 to 0+65.23
EW No 1 to OS No 1
Horiz: 1"=50'
Vert: 1"=10'

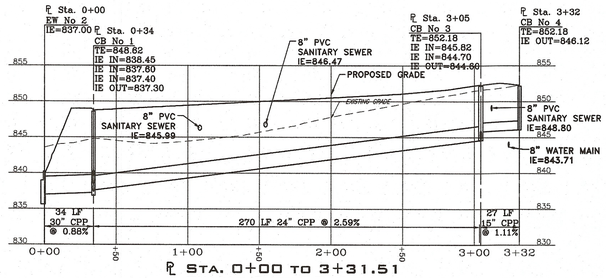

℄ Sta. 0+00 to 3+31.51
EW No 2 to CB No 4
Horiz: 1"=50'
Vert: 1"=10'

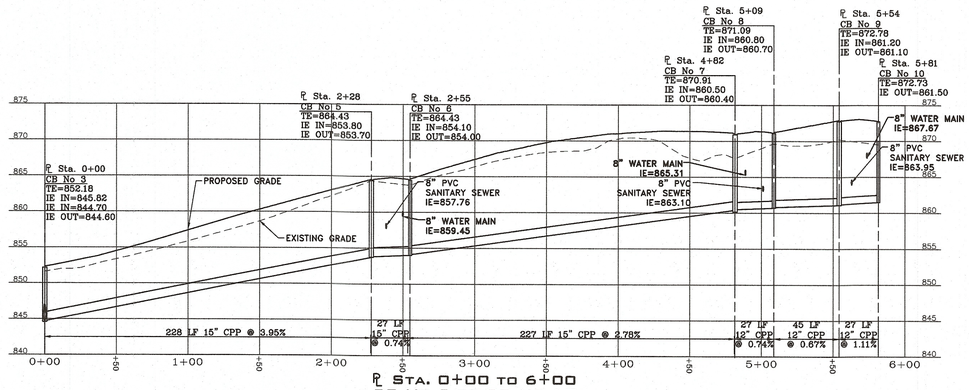

℄ Sta. 0+00 to 6+00
CB No 3 to CB No 10
Horiz: 1"=50'
Vert: 1"=10'

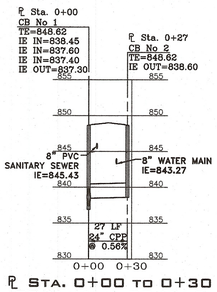

℄ Sta. 0+00 to 0+30
CB No 1 to CB No 2
Horiz: 1"=50'
Vert: 1"=10'

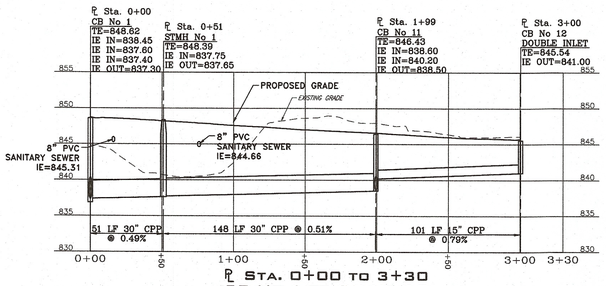

℄ Sta. 0+00 to 3+30
CB No 1 to CB No 12
Horiz: 1"=50'
Vert: 1"=10'

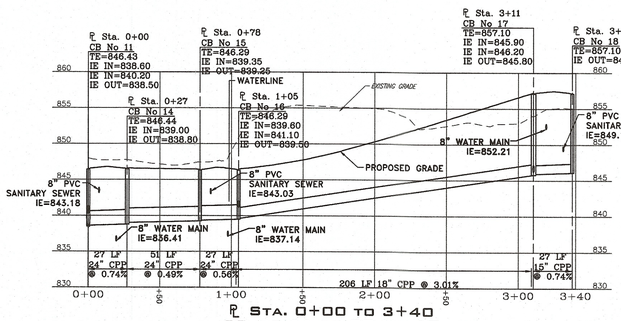

℄ Sta. 0+00 to 3+40
CB No 11 to CB No 17
Horiz: 1"=50'
Vert: 1"=10'

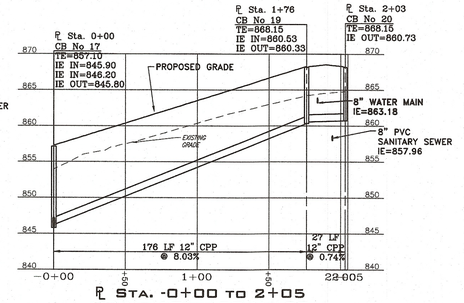

℄ Sta. -0+00 to 2+05
CB No 17 to CB No 20
Horiz: 1"=50'
Vert: 1"=10'

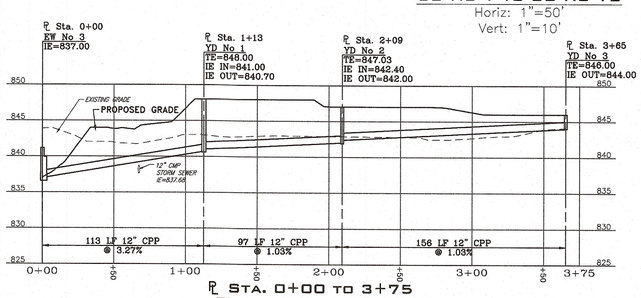

℄ Sta. 0+00 to 3+75
EW No 3 to YD No 3
Horiz: 1"=50'
Vert: 1"=10'

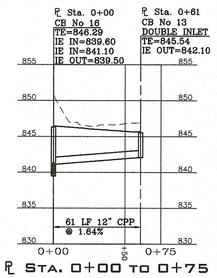

℄ Sta. 0+00 to 0+75
CB16 to CB13
Horiz: 1"=50'
Vert: 1"=10'

STATE OF OHIO
JOHN HEYL
E-88187
REGISTERED
PROFESSIONAL ENGINEER

Scale:	No.	Date	Description	By	No.	Date	Description	By	No.	Date	Description	By
H: 1"=50'												
V: 1"=10'												
Drawn By / Checked By / Approved By												

LSSE Civil Engineers and Surveyors
5980 Wilcox Place, Suite J
Dublin, Ohio 43016
Phone: (614) 395-1661
Corporate: (412) 264-4400
email: info@lsse.com

Filename: 308-343STRM.dwg
Date: May 2023

Maronda Homes
5900 Wilcox Place
Dublin, Ohio 43016

Clearview Crossing
at Stone Ridge
Final Development Plans
Situated In
City of Springboro, Warren County, Ohio

Sheet Title: Storm Sewer Profiles
Drawing No.: 308-343-6
Sheet No.: 6 of 19

N:\PROJ\308\308-343 Springboro\DWG\308-343STRM.dwg Layout=7 Storm Sewer Profiles User=Jason McMonigle Plotted=6/7/2023 1:46 PM

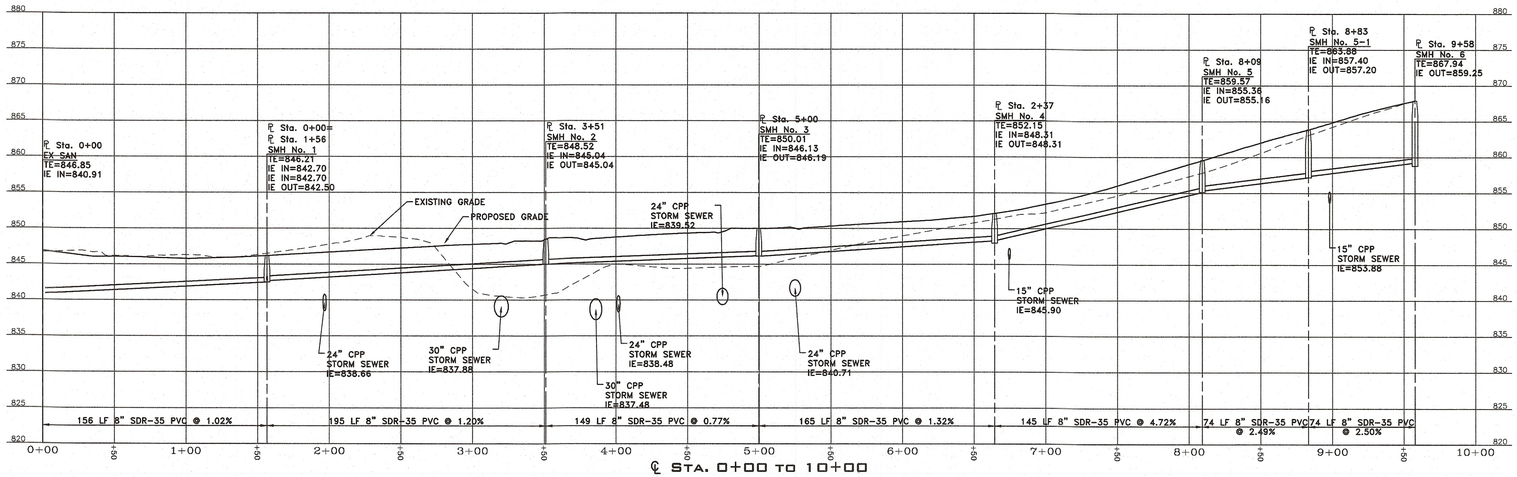

℄ STA. 0+00 TO 10+00
EX SMH TO SMH #5
Horiz: 1"=50'
Vert: 1"=10'

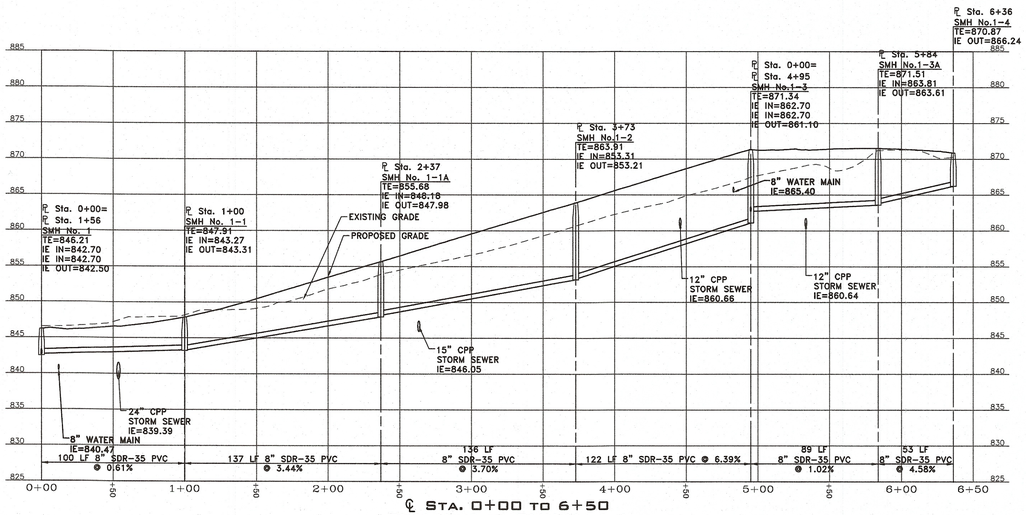

℄ STA. 0+00 TO 6+50
SMH No.1 TO SMH No.1-4
Horiz: 1"=50'
Vert: 1"=10'

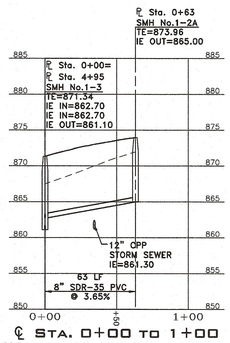

℄ STA. 0+00 TO 1+00
SMH No.1-2 TO SMH No.1-2A
Horiz: 1"=50'
Vert: 1"=10'

STATE OF OHIO
JOHN HEYL
E-88187
REGISTERED
PROFESSIONAL ENGINEER

Scale:	No.	Date	Description	By	No.	Date	Description	By	No.	Date	Description	By
H: 1"= 50' V: 1"= 10'												
Drawn By / Checked By / Approved By												

LSSE
Civil Engineers and Surveyors
5980 Wilcox Place, Suite J
Dublin, Ohio 43016
Phone: (614) 395-1661
Corporate: (412) 264-4400
email: info@lsse.com

Filename: 308-343SAN.dwg
Date: May 2023

Maronda Homes
5900 Wilcox Place
Dublin, Ohio 43016

Clearview Crossing
at Stone Ridge
Final Development Plans
Situated In
City of Springboro, Warren County, Ohio

Sheet Title: Sanitary Sewer Profiles
Drawing No. 308-343-7
Sheet No. 7 of 19

N:\PROJ\308\308-343 Springboro\DWG\308-343SAN.dwg Layout=7 Sanitary Sewer Profiles User=Jason McMonigle Plotted=6/12/2023 1:47 PM

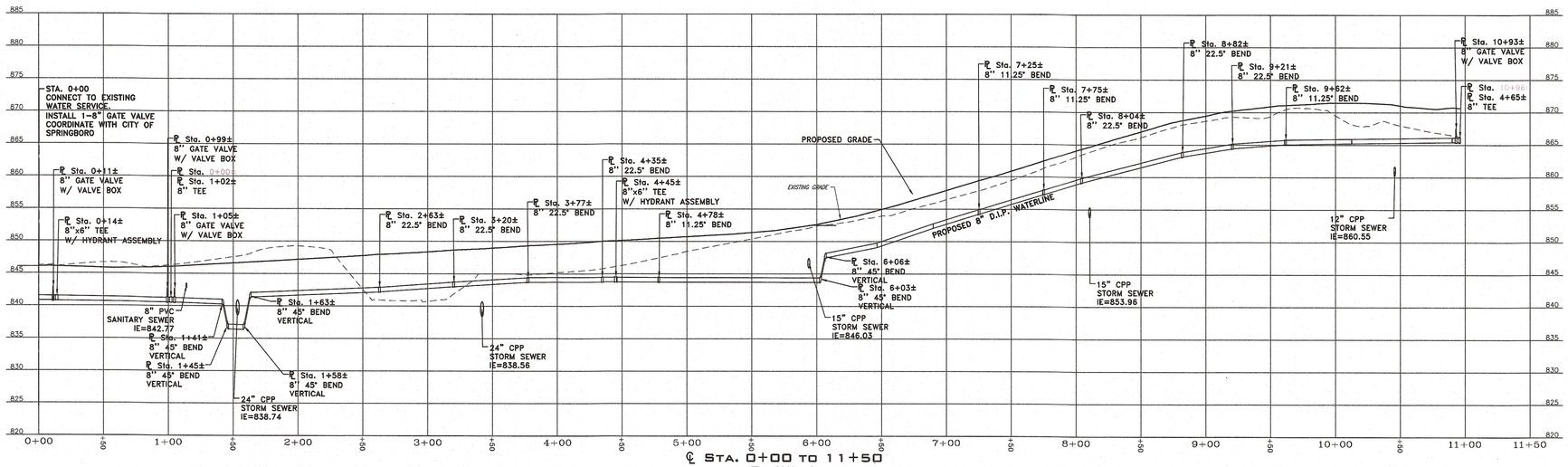

℄ STA. 0+00 TO 11+50
PR WL A
Horiz: 1"=50'
Vert: 1"=10'

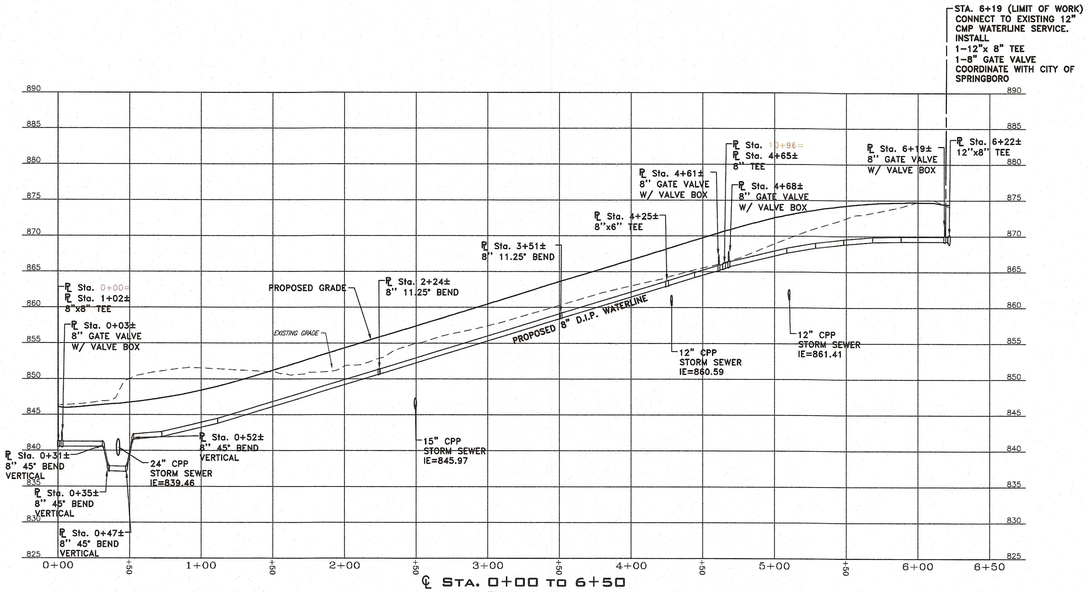

℄ STA. 0+00 TO 6+50
PR WL B
Horiz: 1"=50'
Vert: 1"=10'

STATE OF OHIO
JOHN HEYL
E-88187
REGISTERED
PROFESSIONAL ENGINEER

Scale:	No.	Date	Description	By	No.	Date	Description	By	No.	Date	Description	By
H: 1"= 50'												
V: 1"= 10'												
Drawn By / Checked By / Approved By												

LSSE Civil Engineers and Surveyors
5980 Wilcox Place, Suite J
Dublin, Ohio 43016
Phone: (614) 395-1661
Corporate: (412) 254-4400
email: info@lsse.com

Filename: 308-343SAN.dwg
Date: May 2023

Maronda Homes
5900 Wilcox Place
Dublin, Ohio 43016

Clearview Crossing
at Stone Ridge
Final Development Plans
Situated in
City of Springboro, Warren County, Ohio

Sheet Title: Waterline Profiles
Drawing No.: 308-343-B
Sheet No.: 8 of 19

N:\PROJ\308\308-343 Springboro\Dwg\308-343SAN.dwg Layout=B Waterline Profiles User=Jason McMonigle Plotted=6/12/2023 1:47 PM

CONSTRUCTION METHODS

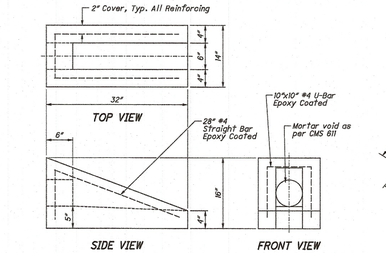

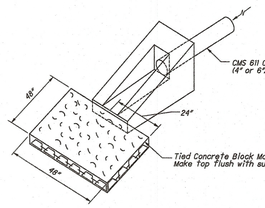

PRECAST REINFORCED CONCRETE OUTLET

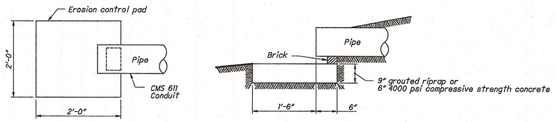

EROSION CONTROL PAD FOR OUTLET PIPE

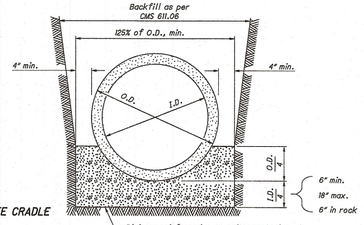

CONCRETE CRADLE

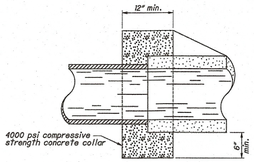

MASONRY COLLAR

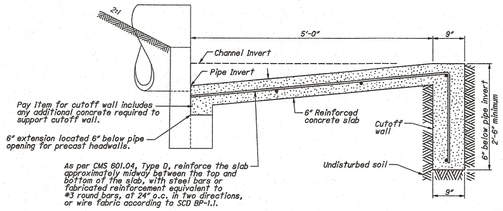

RIPRAP CUTOFF WALL

NOTES

EROSION CONTROL PAD: Provide erosion control at the outlet of all farm drains except where they outlet into a drainage structure.

PAYMENT: Erosion control pads are included in the unit price bid for Item 611 - __ Inch Conduit, Type __ .

PRECAST REINFORCED CONCRETE OUTLET: Provide a concrete outlet that meets CMS 611 requirements.

PAYMENT: The precast reinforced concrete outlet are paid at the contract unit price bid for Item 611 - Precast Reinforced Concrete Outlet.

Tied Concrete Block Mat with Type I Underlayment is paid at the contract unit price bid for Item 601 - Tied Concrete Block Mat with Type I Underlayment.

SPRING DRAIN: Aggregates, tarred paper, tarred burlap, or geotextile fabric backfill and necessary excavation for spring drains are included for payment in the unit price bid per Foot for Item 605 - Aggregate Drains for Springs.

PAYMENT: The pipe is included in the unit price bid per Foot for Item 605 - 6" Unclassified Pipe Underdrains for Springs.

MASONRY COLLARS: Provide a masonry collar where plans require that a pipe extension be joined to the end of an existing pipe with a butt joint. The cost is included in the unit price bid for the new conduit.

RIPRAP CUTOFF WALL: The cost of the cutoff wall is included in the unit price bid for Item 601, Type D - Construct a 6" Reinforced Concrete Slab.

STATE OF OHIO DEPARTMENT OF TRANSPORTATION
STATE HYDRAULIC ENGINEER

REVISIONS
7-20-12
1-18-13
1-17-14
1-15-16
7-20-18
1-15-21
7-16-21

ROADWAY HYDRAULIC ENGINEER M. Cozzoli

OFFICE OF HYDRAULIC ENGINEERING

STANDARD HYDRAULIC CONSTRUCTION DRAWING
OUTLETS, DRAINS AND SEWERS

SCD NUMBER DM-1.1

1 / 2

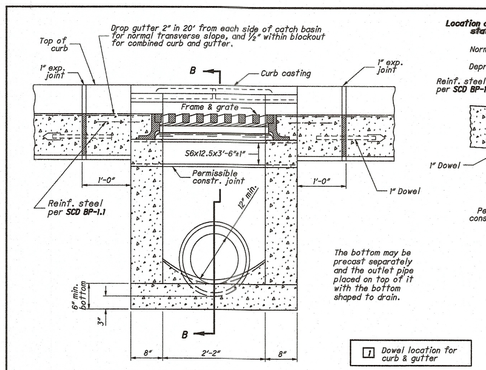

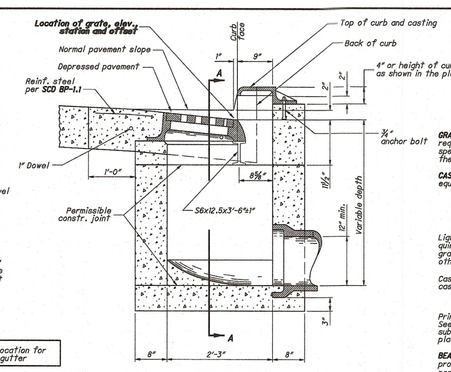

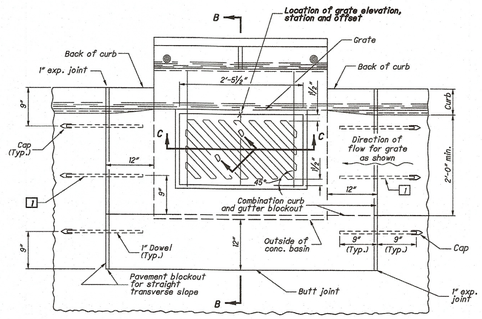

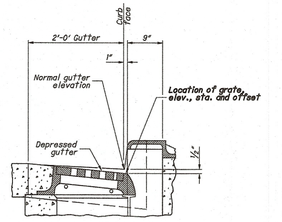

SECTION B-B WITH CURB & GUTTER (½" DEPRESSION)

CATCH BASIN No. 3A

REVISIONS
7-20-12
1-18-13
1-17-14
1-15-16
7-20-18
1-15-21
7-16-21

STATE OF OHIO DEPARTMENT OF TRANSPORTATION
STATE HYDRAULIC ENGINEER
Jeffery E. Syar

ROADWAY HYDRAULIC ENGINEER M. Cozzoli

OFFICE OF HYDRAULIC ENGINEERING

STANDARD HYDRAULIC CONSTRUCTION DRAWING
CATCH BASIN No. 3A

DRAWING CB-3A

1 / 2

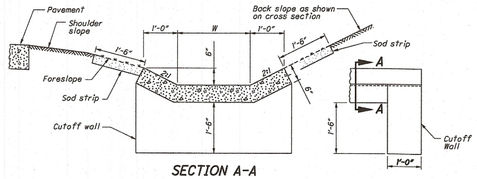

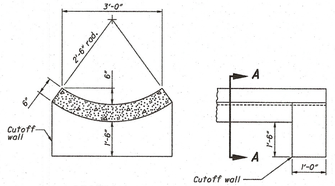

NOTES

GENERAL: Construct gutters with 4000 psi compressive strength concrete, stone or brick.

The thickness of the gutter shown is for concrete construction. If stone or brick is used it must be grout-filled, and increase the gutter thickness to 8" minimum.

Type 3 Gutter with baffles may be used for steep slopes. Furnish new or used paving bricks or precast concrete blocks of similar dimension and place gutter blocks with the outside blocks in one row staggered with the center blocks at 12" on center longitudinally or as shown on plan.

CONSTRUCTION: Impress concrete gutter contraction joints and space at 10 foot intervals unless otherwise specified.

Construct concrete cutoff walls at the beginning and end of a gutter run except where the gutter connects with a catch basin or inlet.

The cost of cutoff walls is included in the unit price bid for the gutter.

SOD: Install and pay for sod according to CMS 660.

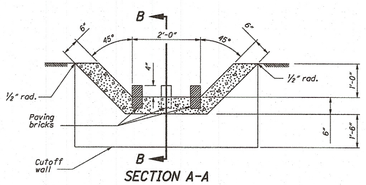

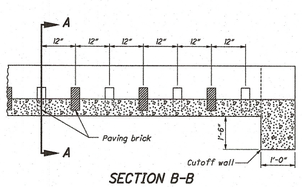

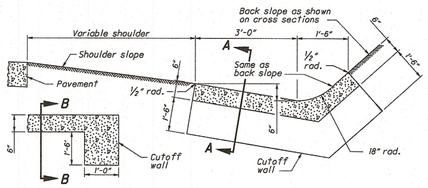

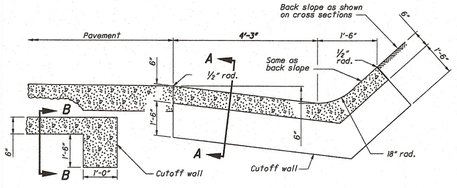

STANDARD PAVED GUTTERS

REVISIONS
7-20-12
1-18-13

STATE OF OHIO DEPARTMENT OF TRANSPORTATION
STATE HYDRAULIC ENGINEER
Jeffery E. Syar

ROADWAY HYDRAULIC ENGINEER M. Cozzoli

OFFICE OF HYDRAULIC ENGINEERING

STANDARD HYDRAULIC CONSTRUCTION DRAWING
PAVED GUTTERS

SCD NUMBER DM-2.1

1 / 1

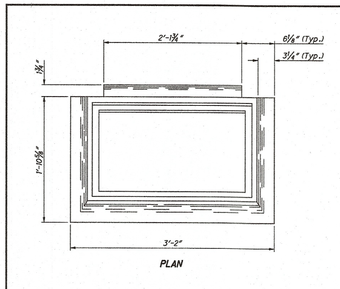

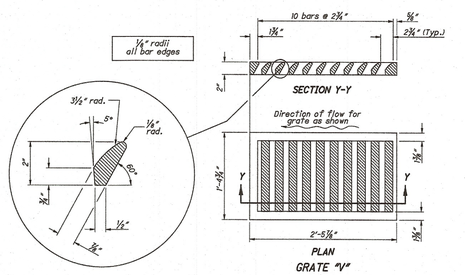

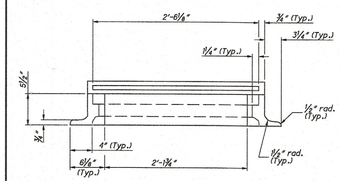

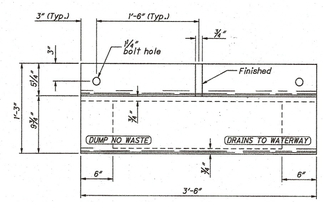

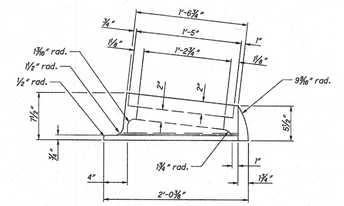

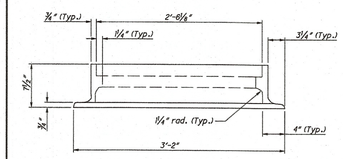

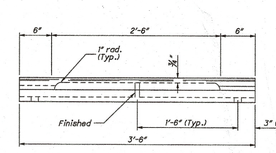

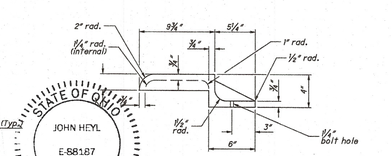

REVISIONS
7-20-12
1-18-13
1-17-14
1-15-16
7-20-18
1-15-21
7-16-21

STATE OF OHIO DEPARTMENT OF TRANSPORTATION
STATE HYDRAULIC ENGINEER
Jeffery E. Syar

ROADWAY HYDRAULIC ENGINEER M. Cozzoli

OFFICE OF HYDRAULIC ENGINEERING

STANDARD HYDRAULIC CONSTRUCTION DRAWING
CATCH BASIN No. 3A

DRAWING CB-3A

2 / 2

Scale:	No.	Date	Description	By	No.	Date	Description	By	No.	Date	Description	By
As Noted	1	08/02/22	ENGINEER COMMENT LETTER	BR								
Drawn By / Checked By / Approved By												

LSSE Civil Engineers and Surveyors
5980 Wilcox Place, Suite J
Dublin, Ohio 43016
Phone: (614) 395-1661
Corporate: (412) 264-4400
email: info@lsse.com

Filename: 308-343STDT.dwg
Date: May 2023

Maronda Homes
5900 Wilcox Place
Dublin, Ohio 43016

Clearview Crossing
at Stone Ridge
Final Development Plans
Situated In
City of Springboro, Warren County, Ohio

Sheet Title: Storm Details
Drawing No. 308-343-10
Sheet No. 10 of 19

P:\LDOT Loish\Standards\DOT\Sheets\SCD\Hydraulics\DM-2.1_2013-01-31.dgn Sheet 1/27/2017 10:19:57 AM jyoung6

P:\PROJ\2018\308-343 Springboro\DWG\308-343STDT.dwg Layout=10 Storm Details User=Robert McMonigle Plotted=6/12/2023 1:47 PM

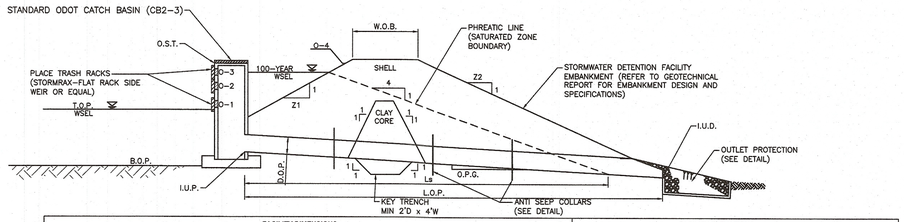

BASIN NO.	FACILITY DIMENSIONS Z1 (FT)	Z2 (FT)	ORIFICE NO. 1 (O-1) (FT)	ORIFICE NO. 2 (O-2) (FT)	ORIFICE NO. 3 (O-2) (FT)	DIAMETER OF PIPE (D.O.P.) (IN-TYPE)	*LENGTH OF PIPE (L.O.P.) (FT)	OUTLET PIPE GRADE (O.P.G.) (%)	WIDTH OF BERM (W.O.B.) (FT)	OUTLET STRUCTURE TYPE (O.S.T.) (FT x FT)	LENGTH OF SATURATION ZONE (Ls) (FT)	FACILITY ELEVATIONS ORFICE NO. 1 INVERT (O-1) (VFT)	ORIFICE NO. 2 INVERT (O-2) (VFT)	ORIFICE NO. 3 INVERT (O-3) (VFT)	PRINCIPLE SPILLWAY INVERT (O-4) (VFT)	BOTTOM OF POND (B.O.P.) (VFT)	TOP OF WET POOL (T.O.P.) (VFT)	INVERT UP STREAM (U.I.P.) (VFT)	INVERT DOWN-STREAM (U.I.D.) (VFT)
1	3.0	2.0	2.3" DIAMETER	6" DIAMETER	12"H x 26"W	18" HPCPP	73	0.8	10	ODOT CB2-3 3 x 3	N/A	838.5	839.5	841.0	842.5	834.5	838.5	836.0	835.5

NOTES:

1. "*" DENOTES LENGTH TO 1st DOWNSTREAM STRUCTURE
2. (VFT) DENOTES "VERTICAL FEET"
3. ANTI-SEEP COLLARS SHALL BE EVENLY SPACED ALONG OUTLET PIPE WITHIN THE "Ls" LENGTH UNLESS "Ls" IS GREATER THAN PIPE OUTFALL LENGTH (IN THIS CASE EVENLY SPACE COLLARS ALONG OUTFALL PIPE LENGTH "LOP"). COLLARS SHALL NOT BE CLOSER THAN 2' TO A PIPE JOINT. REFER TO ANTI-SEEP COLLAR DETAIL FOR QUANTITY AND SIZES.

STORMWATER DETENTION FACILITY

N.T.S.

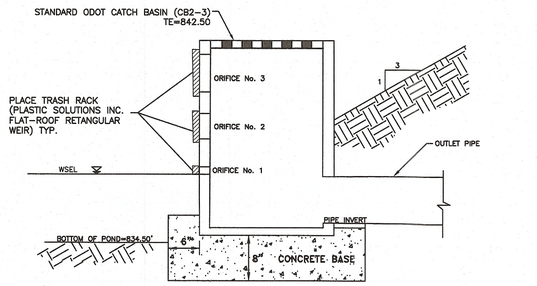

BASIN	TOP ELEVATION TYPE "M" INLET	ORIFICE No.1	ORIFICE No.2	ORIFICE No.3	PIPE SIZE	SLOPE	PIPE INVERT
1	TE=842.5	2.3" DIAMETER IE=838.5	6" DIAMETER IE=838.5	12"H x 26"W IE=841.0	18" HPCPP	0.8%	IE= 836.0

DETENTION BASIN NO. 1 OUTLET STRUCTURE

N. T. S.

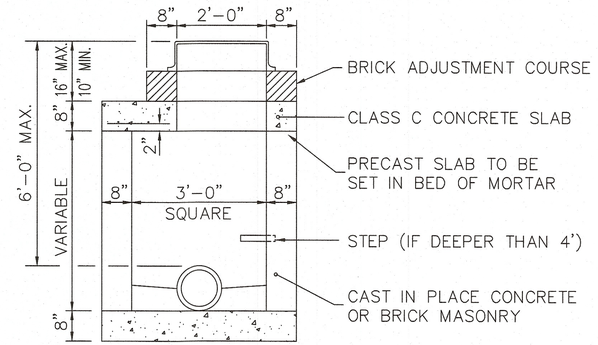

3' SQUARE MANHOLE

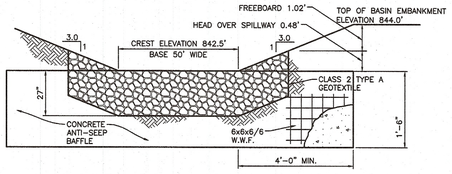

SECTION A-A

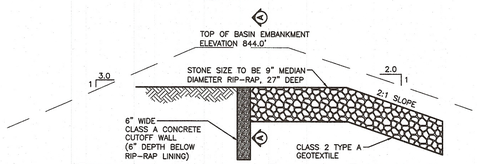

STORMWATER MANAGEMENT DETENTION BASIN NO. 1 EMERGENCY SPILLWAY

N. T. S.

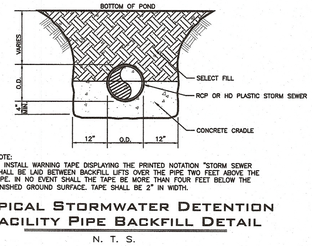

NOTE:
1. INSTALL WARNING TAPE DISPLAYING THE PRINTED NOTATION "STORM SEWER SHALL BE LAID BETWEEN BACKFILL LIFTS OVER THE PIPE TWO FEET ABOVE THE PIPE. IN NO EVENT SHALL THE TAPE BE MORE THAN FOUR FEET BELOW THE FINISHED GROUND SURFACE. TAPE SHALL BE 2" IN WIDTH.

TYPICAL STORMWATER DETENTION FACILITY PIPE BACKFILL DETAIL

N. T. S.

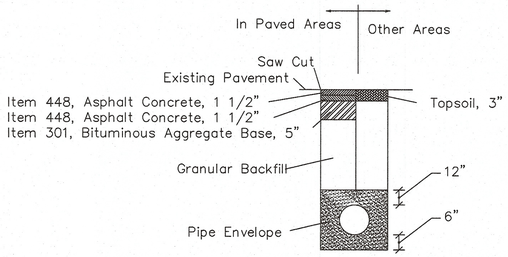

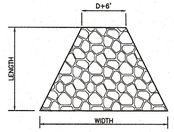

OUTLET	LENGTH	WIDTH	THICKNESS	D50
Endwall 1	6'	7'	18"	9"
Endwall 2	8'	11'	18"	9"
Endwall 3	5'	8'	18"	9"

OUTLET EROSION PROTECTION

SITE DIMENSIONS

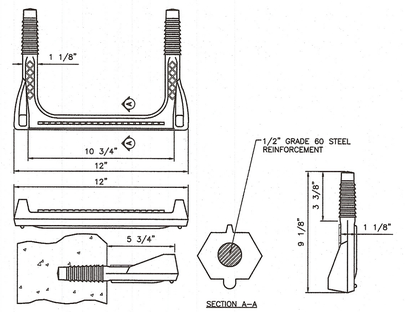

TYPICAL LADDER BARS FOR INLET

N. T. S.

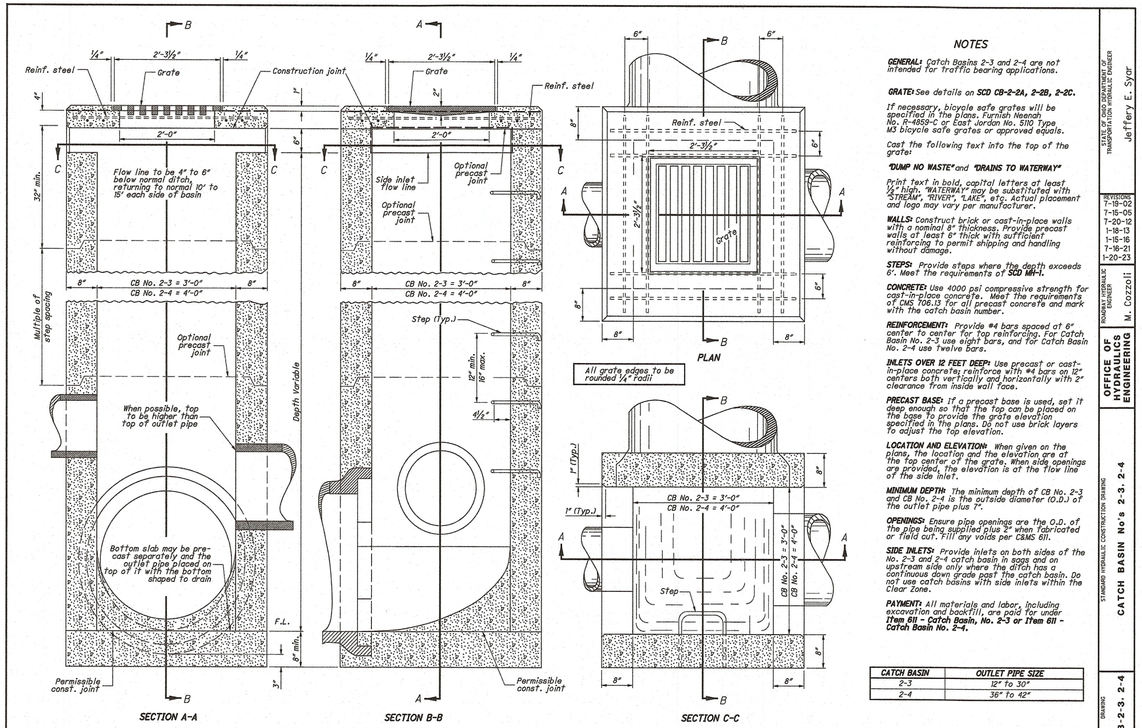

CATCH BASIN No. 2-3 & No. 2-4

NOTES

GENERAL: *Catch Basins 2-3 and 2-4 are not intended for traffic bearing applications.*

GRATE: *See details on SCD CB-2-2A, 2-2B, 2-2C.*

If necessary, bicycle safe grates will be specified in the plans. Furnish Neenah No. R-4859-C or East Jordan No. 5110 Type M3 bicycle safe grates or approved equals.

Cast the following text into the top of the grate:

"DUMP NO WASTE"** and **"DRAINS TO WATERWAY"

Print text in bold, capital letters at least ½" high. "WATERWAY" may be substituted with "STREAM", "RIVER", "LAKE", etc. Actual placement and logo may vary per manufacturer.

WALLS: *Construct brick or cast-in-place walls with a nominal 8" thickness. Provide precast walls at least 6" thick with sufficient reinforcing to permit shipping and handling without damage.*

STEPS: *Provide steps where the depth exceeds 8'. Meet the requirements of **SCD MH-1.***

CONCRETE: *Use 4000 psi compressive strength for cast-in-place concrete. Meet the requirements of CMS 706.13 for all precast concrete and mark with the catch basin number.*

REINFORCEMENT: *Provide #4 bars spaced at 6" center to center for top reinforcing. For Catch Basin No. 2-3 use eight bars, and for Catch Basin No. 2-4 use twelve bars.*

INLETS OVER 12 FEET DEEP: *Use precast or cast-in-place concrete; reinforce with #4 bars on 12" centers both vertically and horizontally with 2" clearance from inside wall face.*

PRECAST BASE: *If a precast base is used, set it deep enough so that the top can be placed on the base to provide the grate elevation specified in the plans. Do not use brick layers to adjust the top elevation.*

LOCATION AND ELEVATION: *When given on the plans, the location and the elevation are at the top center of the grate. When side openings are provided, the elevation is at the flow line of the side inlet.*

MINIMUM DEPTH: *The minimum depth of CB No. 2-3 and CB No. 2-4 is the outside diameter (O.D.) of the outlet pipe plus 7".*

OPENINGS: *Ensure pipe openings are the O.D. of the pipe being supplied plus 2" when fabricated or field cut. Fill any voids per C&MS 611.*

SIDE INLETS: *Provide inlets on both sides of the No. 2-3 and 2-4 catch basin in sags and on upstream side only where the ditch has a continuous down grade past the catch basin. Do not use catch basins with side inlets within the Clear Zone.*

PAYMENT: *All materials and labor, including excavation and backfill, are paid for under **Item 611 - Catch Basin, No. 2-3 or Item 611 - Catch Basin No. 2-4.***

CATCH BASIN	OUTLET PIPE SIZE
2-3	12" To 30"
2-4	36" To 42"

STATE OF OHIO DEPARTMENT OF TRANSPORTATION
Jeffery E. Syar

REVISIONS
1-19-02
7-15-05
7-20-12
1-18-13
1-15-16
1-18-21
1-20-23

ROMMEL PEDRAJA ENGINEER
M. Cozzoli

OFFICE OF HYDRAULICS ENGINEERING

STANDARD HYDRAULIC CONSTRUCTION DRAWING
CATCH BASIN No's 2-3, 2-4

DRAWING CB-2-3, 2-4

1 / 1

STATE OF OHIO
JOHN HEYL
E-85187
REGISTERED
PROFESSIONAL ENGINEER

Scale:	No.	Date	Description	By	No.	Date	Description	By	No.	Date	Description	By
As Noted	1	08/02/22	ENGINEER COMMENT LETTER	BR								
Drawn By / Checked By / Approved By												

LSSE Civil Engineers and Surveyors
5980 Wilcox Place, Suite J
Dublin, Ohio 43016
Phone: (614) 395-1661
Corporate: (412) 264-4400
email: info@lsse.com

Filename: 308-343STDT.dwg
Date: May 2023

Maronda Homes
5900 Wilcox Place
Dublin, Ohio 43016

Clearview Crossing
at Stone Ridge
Final Development Plans
Situated In
City of Springboro, Warren County, Ohio

Sheet Title: Storm Details
Drawing No.: 308-343-11
Sheet No.: 11 of 19

H:\PROJ\308\308-343 Springboro\DWG\308-343STDT.dwg Layout=11 Storm Details User=Jason McMonigle Plotted=6/12/2023 1:47 PM

CITY OF SPRINGBORO GENERAL NOTES

1. EXISTING UNDERGROUND UTILITIES AND SERVICES ARE SHOWN IN THEIR APPROXIMATE LOCATIONS ACCORDING TO THE BEST INFORMATION AVAILABLE. THE LOCATIONS SHOWN ARE INTENDED ONLY AS A GUIDE AND CANNOT BE GUARANTEED ACCURATE. THE CONTRACTOR SHALL BE RESPONSIBLE FOR:

   a. CONTACTING THE INDIVIDUAL UTILITY OWNERS TEN DAYS PRIOR TO CONSTRUCTION AND ADVISING THEM OF THE WORK TO TAKE PLACE.

   b. SOLICITING THEIR AID IN LOCATING AND PROTECTING ANY UTILITY WHICH MAY INTERFERE WITH CONSTRUCTION.

   c. EXCAVATING AND VERIFYING THE HORIZONTAL AND VERTICAL LOCATION OF EACH UTILITY PRIOR TO CONSTRUCTION AND INFORMING THE CITY OF SPRINGBORO ENGINEER OF ANY POTENTIAL CONFLICTS.

   d. ALL DAMAGE TO ANY EXISTING UTILITY.

2. THE FOLLOWING ARE OWNERS OF UNDERGROUND UTILITIES AND SHALL BE NOTIFIED 48 HOURS PRIOR TO CONSTRUCTION TO FIELD LOCATE SAID UTILITIES:

   (GAS & ELECTRIC) CINCINNATI GAS & ELECTRIC
   119 EAST 4TH STREET
   CINCINNATI, OHIO
   (513) 632-3636

   (TELEPHONE) AMERITECH
   3233 WOODMAN DRIVE
   KETTERING, OHIO
   (937) 296-3622

   (WATER & SANITARY) CITY OF SPRINGBORO
   320 WEST CENTRAL AVENUE
   SPRINGBORO, OHIO
   (513) 748-0020

   (CABLE TELEVISION) CONTINENTAL CABLEVISION
   90 COMPARE ROAD
   CENTERVILLE, OHIO

3. THE CONTRACTOR SHALL AT THE END OF EACH WORK DAY REMOVE AND/OR SWEEP ANY MUD OR DEBRIS FORM THE ROAD PAVEMENT SURFACE.

4. ALL STREET SURFACES, DRIVEWAYS, SIDEWALKS, AND OTHER STRUCTURES THAT ARE DISTURBED OR DAMAGED IN ANY MANNER AS A RESULT OF CONSTRUCTION SHALL BE REPLACED IN ACCORDANCE WITH THE SPECIFICATIONS AT THE COST OF THE CONTRACTOR IF NOT SPECIFICALLY NOTED IN THE PLANS.

5. CONSTRUCTION SIGNING SHALL CONFORM TO THE OHIO MANUAL OF UNIFORM TRAFFIC CONTROL DEVICES, LATEST EDITION, LATEST REVSION. TRAFFIC SHALL BE MAINTAINED AT ALL TIMES PER ITEM 614 AND THE OHIO MANUAL OF UNIFORM TRAFFIC CONTROL DEVICES FINAL APPROVAL ON TRAFFIC MAINTENANCE SHALL BE OBTAINED FROM THE ENGINEER.

6. SAFETY REQUIREMENTS, OUTLINED IN THE STATE OF OHIO CONSTRUCTION SAFETY CODE FOR THIS TYPE OF WORK WILL BE ENFORCED AND THE CONTRACTOR SHALL COMPLY WITH THE PROVISIONS OF THE CODE ISSUED AS A GENERAL ORDER BY THE INDUSTRIAL COMMISSION OF OHIO.

7. THE CONTRACTOR SHALL TAKE APPROPRIATE MEASURES TO CONTROL SOIL EROSION AND SEDIMENTATION THROUGH THE LIFE OF THE CONTRACT. THIS MAY BE PERFORMED BY THE USE OF STRAW BALES, DIKES, SEDIMENT PITS, MULCHES, FILTER FABRICS, AND OTHER DEVICES AND METHODS. PARTICULAR CARE SHALL BE TAKEN TO AVOID EROSION AND SEDIMENTATION ON EXISTING PAVED AND GRAVELLED AREAS, AND INTO THE SEWER SYSTEM.

8. ALL WORK SHALL BE PERFORMED IN ACCORDANCE WITH THE STATE OF OHIO, DEPARTMENT OF TRANSPORTATION CONSTRUCTION AND MATERIAL SPECIFICATIONS, DATED JANUARY 1, 1997, OR LATEST EDITION.

9. ALL CITY STREET NAMES SIGNS AND TRAFFIC SIGNS TO BE DISTURBED BY CONSTRUCTION SHALL BE CAREFULLY REMOVED, STORED AND REINSTALLED AFTER CONSTRUCTION IS OVER. THE COST OF THIS WORK SHALL BE INCLUDED IN THE VARIOUS BID ITEMS FOR THIS PROJECT.

10. THE CONTRACTOR WILL SAW CUT, USING A DIAMOND BLADE, AND REMOVE THE PAVEMENT AS NECESSARY. THE CONTRACTOR WILL BE RESPONSIBLE TO DISPOSE OF THE REMOVED PAVEMENT. THE TYPICAL SECTION FOR PAVEMENT REPLACEMENT WILL BE 4" ITEM 301, 2" ITEM 402 AND 2" ITEM 404. THE COST OF THIS WORK WILL BE INCLUDED IN THE ITEM "PAVEMENT REMOVAL AND REPLACEMENT AS PER PLAN."

11. ALL DISTURBED AREAS WILL BE GRADED AND SEEDED AS DIRECTED BY THE ENGINEER. THE COST OF ALL THE WORK INVOLVED WILL BE INCLUDED IN THE VARIOUS BID ITEMS FOR THE PROJECT. NO SEPERATE PAYMENT WILL BE MADE FOR GRADING, SEEDING AND MULCHING.

12. ALL EXCESS EXCAVATED MATERIAL WILL BE HAULED AWAY BY THE CONTRACTOR AND THE RELATED COST WILL BE INCLUDED IN THE VARIOUS BID ITEMS.

13. CONTRACTOR SHALL NOT REMOVE OR COVER ANY TRAFFIC CONTROL SIGNS OR OTHER DEVICES WITHOUT WRITTEN PERMISSION OF THE CITY. CONTRACTOR SHALL POST TEMPORARY SIGNS, FLAGGERS AND OTHER TRAFFIC CONTROL DEVICES AS NECESSARY TO PROPERLY WARN MOTORISTS AND PEDESTRIANS OF CONSTRUCTION HAZARDS AND TO DIRECT VEHICULAR AND FOOT TRAFFIC TO AVOID SUCH HAZARDS. CONTRACTOR SHALL INDEMNIFY, DEFEND AND HOLD THE CITY HARMLESS FROM ALL PERSONAL INJURY AND DAMAGE TO PROPERTY IN ANY WAY ARISING FROM CONTRACTORS FAILURE TO COMPLY WITH THIS PARAGRAPH.

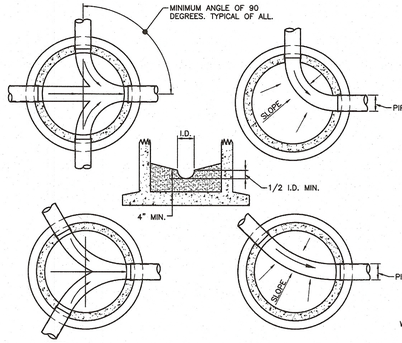

NOTES:
1. CHANNELS TYPICAL, NUMBER AND LOCATION TO MEET FIELD CONDITIONS.
2. CHANNELS TO BE SEMI-CIRCULAR IN SECTION.
3. SLOPE MANHOLE FLOOR TO CHANNEL FOR DRAINAGE.
4. USE CLASS 'AAA' CONCRETE TO FORM CHANNELS AND HAVE A MINIMUM DEPTH OF 6 INCHES.
5. PROVIDE SMOOTH FLOAT FINISH. PROVIDE UNIFORM RADIUS.
6. PRE-POURED INVERTS PROHIBITED. ALL INVERTS TO BE FIELD POURED.

TYPICAL
MANHOLE CHANNELS
N. T. S.

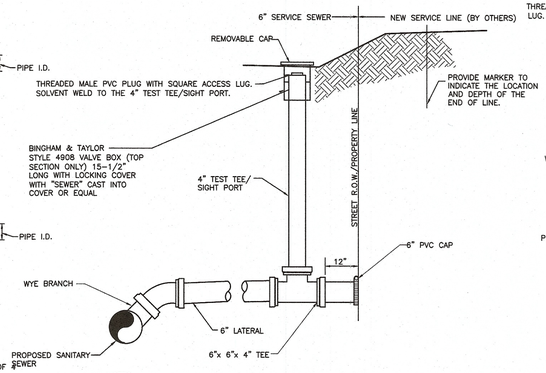

NOTES:
1. CONFORM PVC PIPE AND FITTINGS TO THE REQUIREMENTS OF ASTM D-3034-SDR 26 AND ASTM D-3212 JOINTS.
2. CONSTRUCT ALL LATERALS AT A MINIMUM SLOPE OF TWO PERCENT(2%).
3. INSTALL ALL LATERALS ACCORDING TO THE TRENCH AND PIPE ZONE DETAIL.
4. THE CONTRACTOR TO COORDINATE PLACEMENT OF WYE CONNECTION, SERVICE LATERAL AND SIGHT TEE WITH THE PROPERTY OWNER AND THE OWNER'S REPRESENTATIVE PRIOR TO THE START OF CONSTRUCTION.

TYPICAL
WYE CONNECTION, SERVICE LATERAL
SIGHT TEE DETAIL
N. T. S.

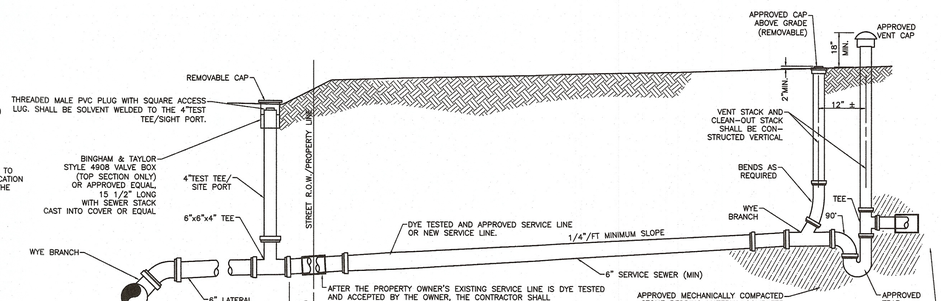

NOTES:
1. PVC PIPE SHALL CONFORM TO THE REQUIREMENTS OF ASTM D-3034-SDR 26 AND ASTM D-3212 JOINTS.
2. PRIOR TO RECONNECTION TO THE EXISTING SERVICE LATERAL THE CONTRACTOR SHALL DYE TEST ROOF DOWN SPOUTS AND STORM WATER DRAIN LINES AS DETERMINED BY THE SD1 REPRESENTATIVE AND AT NO ADDITIONAL COST TO THE INSTALLATION.
3. THE CONTRACTOR SHALL SCHEDULE ALL HOUSE LATERAL CONNECTIONS WITH THE SD1 REPRESENTATIVE AND PROPERTY OWNER PRIOR TO START OF CONSTRUCTION ON PRIVATE PROPERTY.
4. ALL SEWAGE LINE WORK/INSTALLATION MUST BE INSPECTED AND APPROVED BY THE SANITATION DISTRICT NO. 1 OF NORTHERN KENTUCKY.

TYPICAL SIGHT TEE, SERVICE LINE CLEANOUT AND VENT
N. T. S.

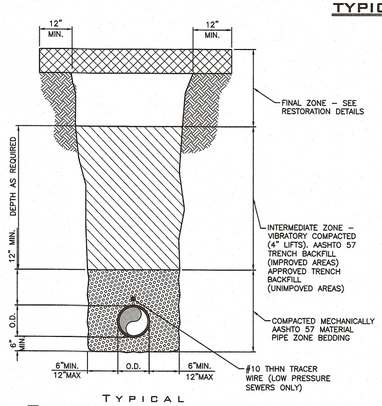

TYPICAL
TRENCH AND PIPE ZONES
N. T. S.

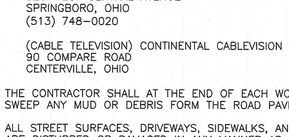

NOTES:
1. WHEN THE HORIZONTAL SEPARATION OF THE WATER MAIN AND SEWER LINE IS LESS THAN 10', THE VERTICAL SEPARATION BETWEEN THE TOP (CROWN) OF THE SEWER LINE AND THE BOTTOM (INVERT) OF THE WATER MAIN SHALL BE AT LEAST 18". ENCASE WATERLINE IN CONCRETE WHERE SEWER / WATERLINE CROSSINGS OCCUR AND, WHERE THE CONDITIONS PREVENT AN 18" VERTICAL SEPARATION.
2. NO OTHER UNDERGROUND UTILITIES, SUCH AS GAS, ELECTRIC, TELEPHONE, OR CABLE, SHALL BE PLACED ABOVE THE WATERLINE OR WITHIN THREE FEET OF EACH SIDE OF THE WATERLINE.

UTILITY SEPARATION
N. T. S.

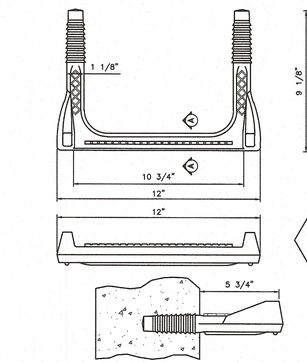

TYPICAL
LADDER BARS FOR MANHOLE
N. T. S.

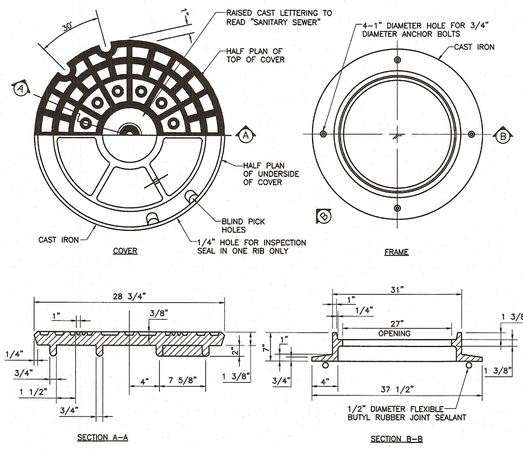

TYPICAL
STANDARD SANITARY MANHOLE FRAME AND COVER
N. T. S.

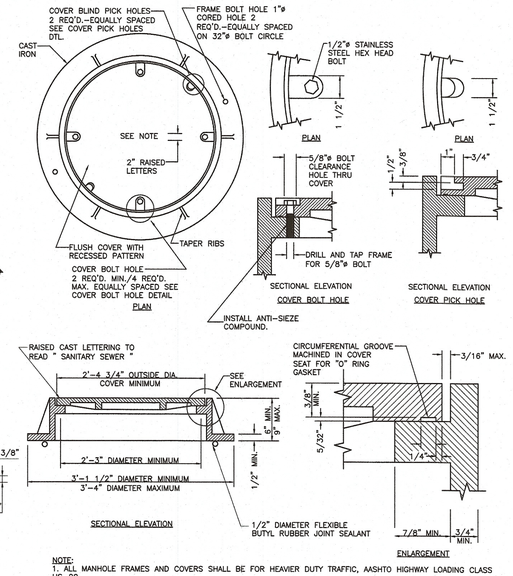

NOTE:
1. ALL MANHOLE FRAMES AND COVERS SHALL BE FOR HEAVIER DUTY TRAFFIC, AASHTO HIGHWAY LOADING CLASS HS-20.
2. INSTALL ANTI-SEIZE COMPOUND ON HEX BOLT.

TYPICAL
WATERTIGHT SANITARY MANHOLE FRAME AND COVER
N. T. S.

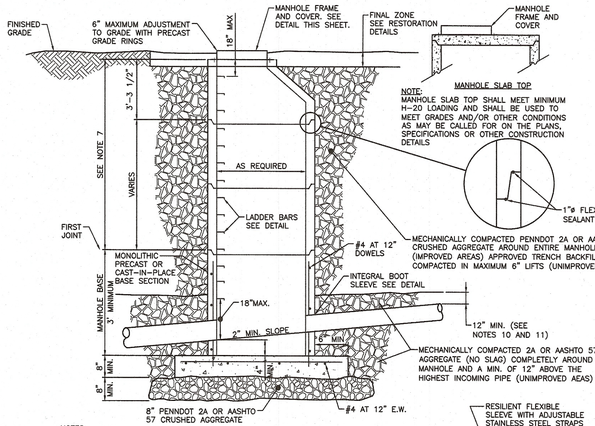

NOTES:
1. ALL CONCRETE TO BE CLASS AAA CONCRETE, 4500 PSI, 5% ± 1% AIR ENTRAINED.
2. SEAL MANHOLE BARREL JOINTS WITH 2- 1"ø FLEXIBLE BUTYL RUBBER JOINT SEALANT, USE 1/2"ø FOR FRAME AND COVER.
3. ANCHOR FRAME AND COVER WITH 2-3/4" DIA. S.S. ANCHOR BOLTS SET PERMANENTLY INTO CONCRETE.
4. POINT LIFTING HOLES WITH NON-SHRINK GROUT, WATERTIGHT, NEAT AND SMOOTH.
5. MAXIMUM ADJUSTMENT TO FINISHED GRADE USING PRECAST GRADE RINGS IS SIX INCHES (6").
6. CONFORM PRECAST SECTIONS TO ASTM C-478 AS REVISED.
7. IF THIS DIMENSION IS LESS THAN 3'-3" USE PRECAST SLAB TOP DESIGNED TO MEET LOAD CONDITIONS (H-20 MIN.)
8. COAT EXTERIOR OF ALL MANHOLE BARREL SECTIONS WITH APPROVED BITUMINOUS COATING.
9. CAST LADDER BARS INTO BARREL SECTIONS AND CONFORMING TO ASTM C-478, AS REVISED.
10. WHERE MANHOLES ARE INSTALLED IN IMPROVED AREAS, BACKFILL THE ENTIRE EXCAVATED AREA WITH MECHANICALLY COMPACTED AASHTO 57 CRUSHED AGGREGATE (NO SLAG).
11. WHERE MANHOLES ARE CONSTRUCTED IN UNIMPROVED AREAS, BACKFILL THE ENTIRE EXCAVATED AREA WITH MECHANICALLY COMPACTED AASHTO 57 CRUSHED AGGREGATE (NO SLAG). FROM THE BOTTOM OF THE EXCAVATED AREA TO 12 INCHES ABOVE THE HIGHEST PIPE ENTERING THE MANHOLE.

TYPICAL
PRECAST CONCRETE SANITARY MANHOLE AND SLAB TOP
N. T. S.

STATE OF OHIO — JOHN HEYL — E-88187 — REGISTERED PROFESSIONAL ENGINEER

Scale: As Noted	No.	Date	Description	By	No.	Date	Description	By	No.	Date	Description	By
Drawn By	Checked By	Approved By	1	10/4/2022	RESPOND TO SD1 COMMENTS	ATM										

LSSE Civil Engineers and Surveyors
5980 Wilcox Place, Suite J
Dublin, Ohio 43016
Phone: (614) 395-1661
Corporate: (412) 264-4400
email: info@lsse.com

Filename: 308-343SADT.dwg
Date: May 2023

Maronda Homes
5900 Wilcox Place
Dublin, Ohio 43016

Clearview Crossing
at Stone Ridge
Final Development Plans
Situated In
City of Springboro, Warren County, Ohio

Sheet Title: Sanitary Details
Drawing No. 308-343-12
Sheet No. 12 of 19

N:\PROJ\308\308-343 Springboro\Dwrk\308-343SADT.dwg Layout=12 Sanitary Details User=Jason McKenzie Plotted=8/17/2023 1:47 PM

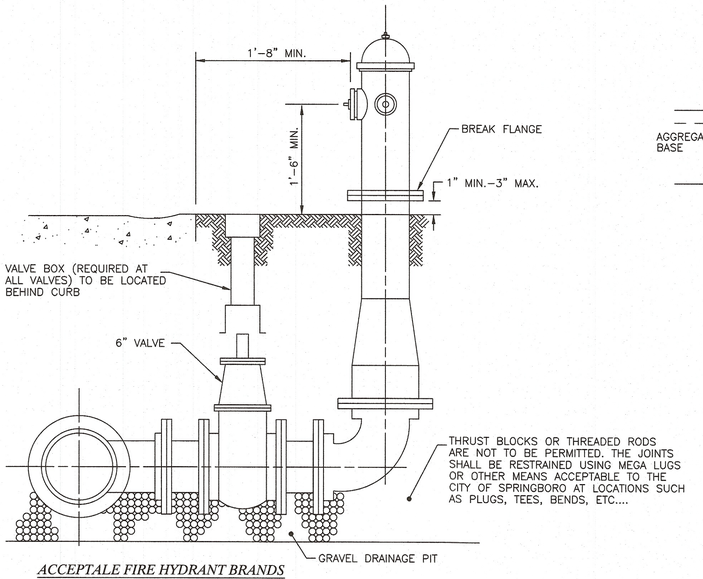

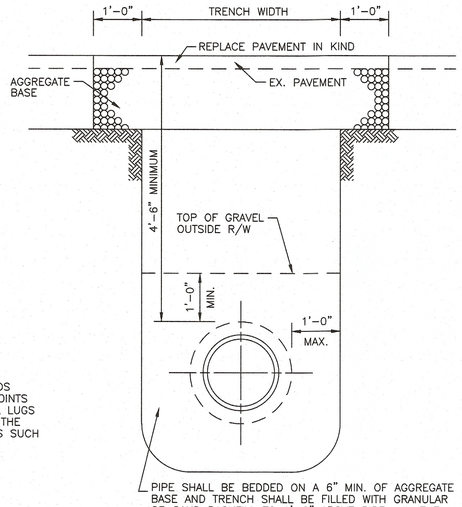

PIPE SHALL BE BEDDED ON A 6" MIN. OF AGGREGATE BASE AND TRENCH SHALL BE FILLED WITH GRANULAR OR SAND BACKFILL TO 1'-0" ABOVE PIPE. IN THE PUBLIC RIGHT-OF-WAY, TRENCH SHALL BE FILLED WITH GRANULAR MATERIAL TO 1'-0" OF SURFACE OR TO PAVEMENT BASE. ALL WATER LINES SHALL BE CLASS 52 DUCTILE IRON.

ACCEPTALE FIRE HYDRANT BRANDS

1. AMERICAN DARLING MODEL B-62-B WITH 5" STORZ CONNECTION ON THE STEAMER

FIRE HYDRANT DETAILS

1.	DIA. - MAIN VALVE OPENING	5 1/4"
2.	DIA. - PUMPER CONNECTION	I.D. 4 1/2" O.D. 5 3/4"
3.	DIA. - HOSE CONNECTIONS	TWO 2 1/2"
4.	THREAD TYPE	NATIONAL STANDARD - NO THREAD EXPOSED TO WATER
5.	SHAPE - CAPS & OPERATING NUT	PENTAGON
6.	DIMENSIONS - OPERATING NUT -	1 1/2"
7.	DIRECTION OF OPENING	COUNTER CLOCKWISE

FIRE HYDRANT DETAILS CONT.

8.	COLOR TO BE PAINTED	BARREL - SAFETY RED BONNET - SAFETY RED
9.	VALVE SEAT	MACHINED BRONZE
10.	BARREL	TWO PIECE WITH BREAK AWAY FEATURE
11.	TOP	DRY
12.	BEARING	ANTI-FRICTION THRUST BEARING

FIRE HYDRANT AND WATER TRENCH EXCAVATION

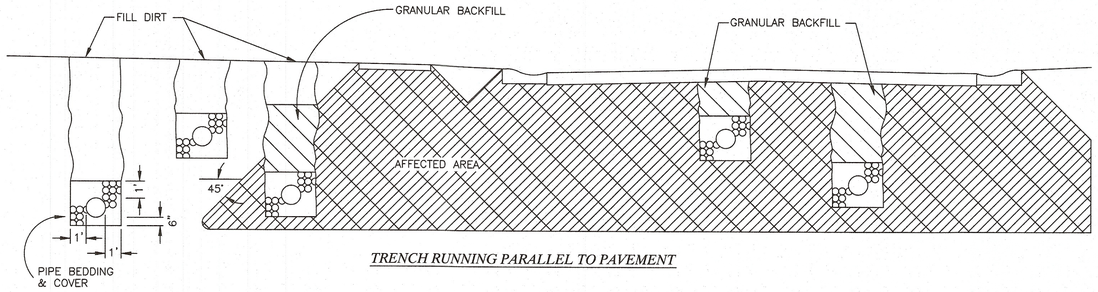

TRENCH RUNNING PARALLEL TO PAVEMENT

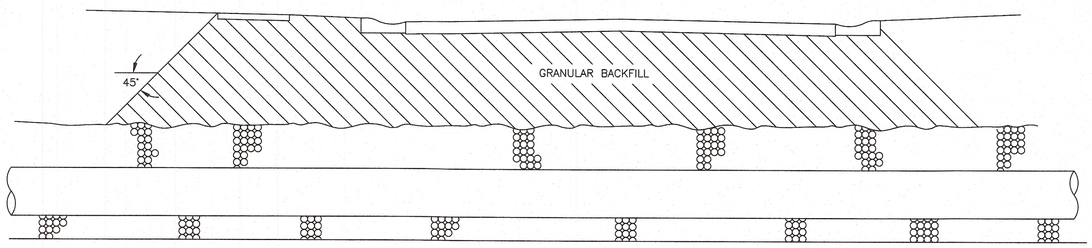

TRENCH CROSSING PAVEMENT

1. EXAMPLES ONLY, TO SHOW EXTENT OF BACKFILL IN VICINITY OF PAVEMENTS.
2. PIPE BEDDING SHALL BE PEA GRAVEL, TORPEDO FILL, OR PIPE FILL (SAND).
3. GRANULAR BACKFILL (ODOT ITEM 703, #67 COARSE AGGREGATE) TO BE COMPACTED IN 6" LAYERS WITH MECHANICAL TAMPER.
4. THIS STANDARD APPLIES TO ALL UTILITY TRENCHES.

GRANULAR BACKFILL REQUIREMENTS

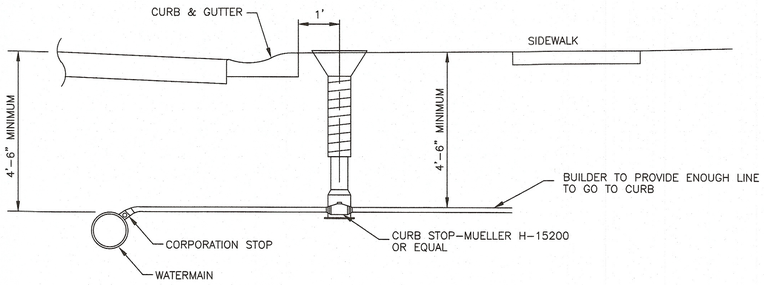

WATERMAIN AND SERVICE CONNECTIONS

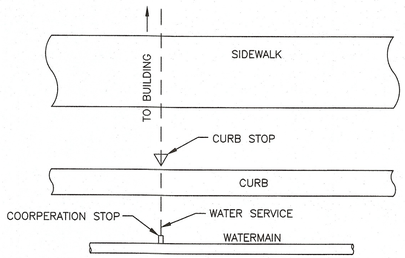

PLAN

NOTE:

1. SERVICE LINES SHALL BE TYPE 1" MINIMUM "K" COPPER ONLY
2. THE DEPTH OF THE LINE SHALL BE 4'6" MINIMUM

WATERMAIN AND SERVICE CONNECTIONS

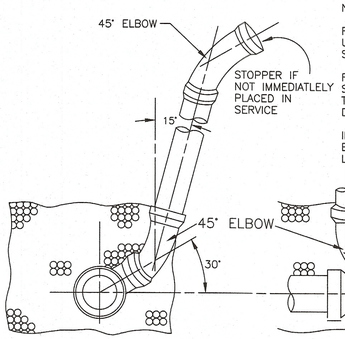

NOTE:

RISER PIPE TO BE BEDDED SOLIDLY AGAINST UNDISTURBED GROUND, ALSO TEE MAY BE SUBSTITUTED FOR WYE BRANCH IF SPECIFIED.

RISER PIPE TO BE INSTALLED SO THAT CONNECTING SERVICE SHALL HAVE A MINIMUM OF 7 FEET DEEP AT THE PROPERTY LINE UNLESS A GREATER DEPTH IS DIRECTED.

IF SANITARY SERVICES ARE SPECIFIED THEY SHALL BE A MINIMUM OF 7 FEET DEEP AT THE PROPERTY LINE UNLESS DIRECTED TO BE AT A GREATER DEPTH.

WYE BRANCH

NOTE:

THE USE OF CONCRETE AT CONNECTION TO BE AT DISCRETION OF INSPECTOR.

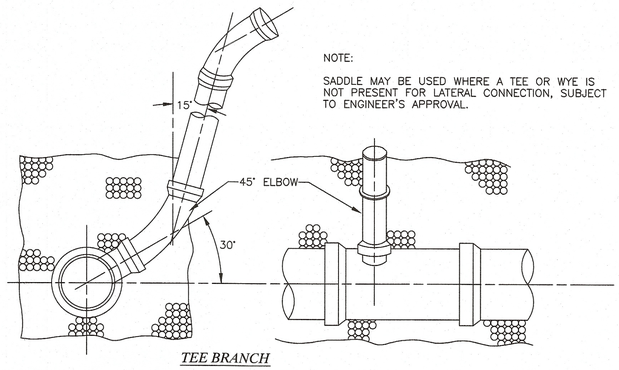

NOTE:

SADDLE MAY BE USED WHERE A TEE OR WYE IS NOT PRESENT FOR LATERAL CONNECTION, SUBJECT TO ENGINEER'S APPROVAL.

TEE BRANCH

DEEP CONNECTOR

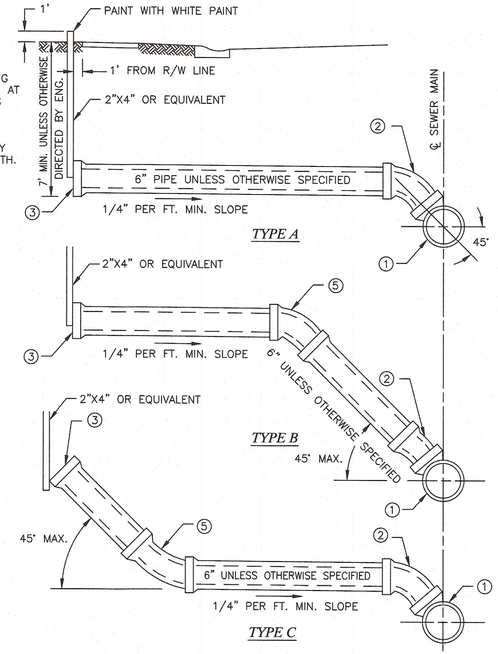

1. 6" TEE OR WYE - ROTATE 45° FROM HORIZONTAL UNLESS OTHERWISE SPECIFIED
2. 6" 1/8 BEND OR 1/16 BEND AS NECESSARY
3. CAP UNLESS JOINING EXISTING HOUSE CONNECTION
4. BED PIPE WITH 6" GRANULAR MATERIAL AND BACKFILL WITH GRANULAR MATERIAL TO 12" ABOVE PIPE
5. EXACT RECORD OF BEND LOCATION MUST BE MADE, AS TO DEPTH FROM SURFACE AND DISTANCE FROM ℄ OF SEWER, BEFORE BACKFILL IS PLACED

HOUSE CONNECTION

DEEP CONNECTOR AND HOUSE CONNECTION

STATE OF OHIO
JOHN HEYL
E-88187
REGISTERED
PROFESSIONAL ENGINEER

Scale:	Drawn By	Checked By	Approved By
	VW	JW	JW

No.	Date	Description	By

No.	Date	Description	By

No.	Date	Description	By

LSSE
Civil Engineers and Surveyors
5980 Wilcox Place, Suite J
Dublin, Ohio 43016
Phone: (614) 395-1661
Corporate: (412) 264-4400
email: info@lsse.com

Filename: 308-343UTDT.dwg
Date: May 2023

Maronda Homes
5900 Wilcox Place
Dublin, Ohio 43016

Clearview Crossing
at Stone Ridge
Final Development Plans
Situated in
City of Springboro, Warren County, Ohio

Sheet Title: Utility Details
Drawing No.: 308-343-13
Sheet No.: 13 of 19

N:\PROJ\308\308-343 Springboro\DWG\308-343UTDT.dwg Layout=13 Utility Details User=Jason McMonigle Plotted=6/12/2023 1:48 PM

SECTION VIEW

1. BUILDING SEWERS SHALL NOT BE CONSTRUCTED CLOSER THAN 3 FEET TO ANY EXTERIOR WALL, CELLAR, BASEMENT, OR CISTERN, NOR SHALL THERE BE LESS THAN 2 FEET OF COVER.
2. ALL EXCAVATIONS SHALL BE BY OPEN CUT, WITH THE TRENCH CUT TWO INCHES BELOW GRADE AND REFILLED WITH PEA GRAVEL, PIPE FILL, OR TORPEDO FILL TO THE PROPER GRADE.
3. THE WIDTH OF THE TRENCH AT THE TOP OF THE PIPE SHALL NOT EXCEED TWO FEET PLUS THE OUTSIDE DIAMETER OF THE PIPE.
4. THE MINIMUM SEWER SLOPE SHALL BE 2.00%
5. PIPE SIZE SHALL NOT BE LESS THAN FOUR INCHES FOR ALL OTHER BUILDINGS.
6. THE FOLLOWING IS A LIST OF APPROVED PIPES:
   - VITRIFIED CLAY PIPE – WITH "O" RING GASKET
   - P.V.C. PIPE – WITH RUBBER GASKET
   - A.B.S. PIPE – SDR–35 – WITH CHEMICAL WELD
   - A.B.S. PIPE – SCHEDULE 40 – WITH CHEMICAL WELD
7. ALL PIPING, FLEXIBLE COUPLINGS, DONUTS, ETC., ARE SUBJECT TO THE APPROVAL OF THE INSPECTOR.
8. ALL CHANGES IN ALIGNMENT OR GRADE ARE TO BE MADE USING THE PROPER BENDS OR CURVES.
9. ALL SEWERS EXCEEDING 100 FEET IN LENGTH MUST HAVE A CLEAN–OUT EVERY 100 FEET.
10. ANY VARIATION FROM THIS STANDARD MUST HAVE PRIOR APPROVAL OF THE CITY ENGINEER.

BUILDING SEWERS

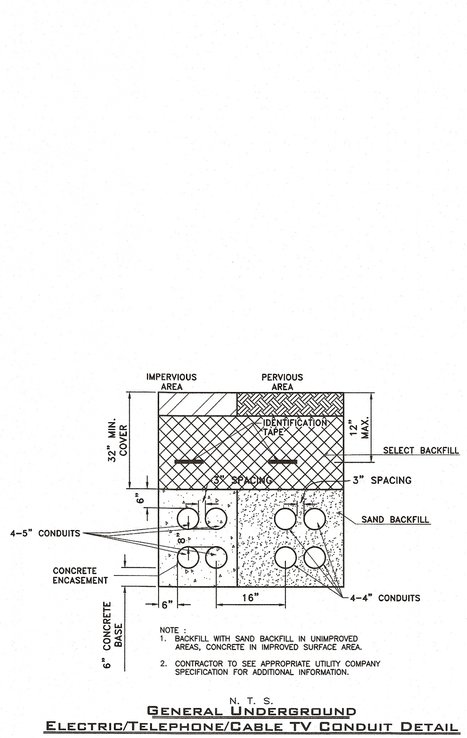

NOTE :
1. BACKFILL WITH SAND BACKFILL IN UNIMPROVED AREAS, CONCRETE IN IMPROVED SURFACE AREA.
2. CONTRACTOR TO SEE APPROPRIATE UTILITY COMPANY SPECIFICATION FOR ADDITIONAL INFORMATION.

N. T. S.

General Underground Electric/Telephone/Cable TV Conduit Detail

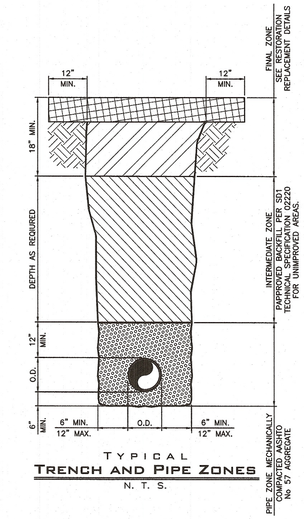

TYPICAL
Trench and Pipe Zones
N. T. S.

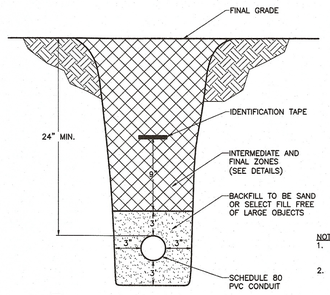

NOTES:
1. USE GALVANIZED RIGID STEEL CONDUIT FOR ALL BENDS. USE LARGE RADIUS BENDS ONLY.
2. FOR PARALLEL CONDUIT INSTALLATION, PROVIDE MINIMUM SEPARATION OF 6" (HORIZONTAL).

General Underground Electric/Telephone/Cable TV Conduit Detail
N. T. S.

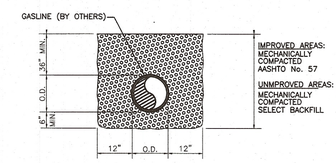

NOTES:
1. FURNISH AND INSTALL IN ACCORDANCE WITH UTILITY COMPANY'S SPECIFICATION.

Gasline Trench and Backfill Detail
N. T. S.

STATE OF OHIO
JOHN HEYL
E-88107
REGISTERED
PROFESSIONAL ENGINEER

Scale:			No.	Date	Description	By	No.	Date	Description	By	No.	Date	Description	By
Drawn By: VW	Checked By: JW	Approved By: JW												

LSSE Civil Engineers and Surveyors
5980 Wilcox Place, Suite J
Dublin, Ohio 43016
Phone: (614) 395–1661
Corporate: (412) 264–4400
email: info@lsse.com

Filename: 308–343UTDT.dwg
Date: May 2023

Maronda Homes
5900 Wilcox Place
Dublin, Ohio 43016

Clearview Crossing
at Stone Ridge
Final Development Plans
Situated In
City of Springboro, Warren County, Ohio

Sheet Title: Utility Details
Drawing No.: 308–343–14
Sheet No.: 14 of 19

H:\PROJ\308\308–343 Springboro\DWG\308–343UTDT.dwg Layout=14 Utility Details User=Jason McMonigle Plotted=6/12/2023 1:48 PM

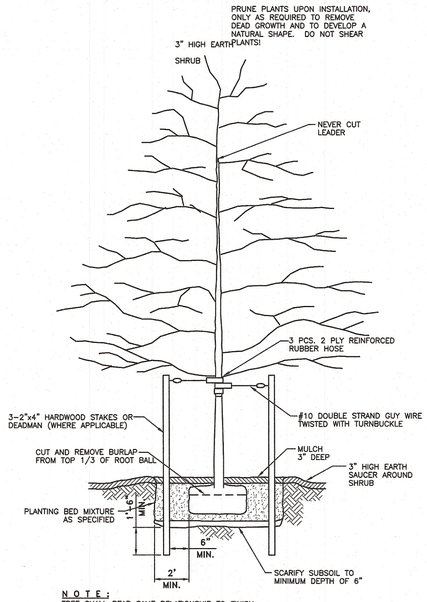

NOTE:
TREE SHALL BEAR SAME RELATIONSHIP TO FINISH GRADE AS IT BORE TO PREVIOUS EXISTING GRADE.

TREE PLANTING
N. T. S.

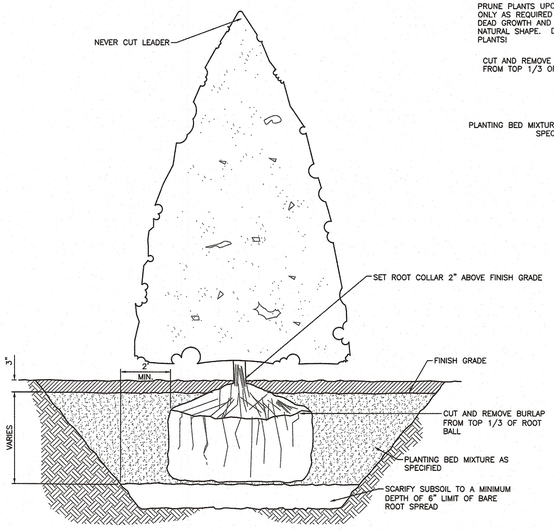

EVERGREEN TREE PLANTING
N. T. S.

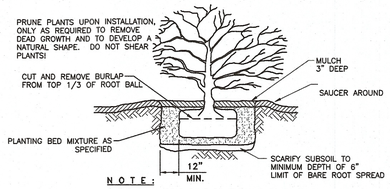

NOTE:
SHRUB SHALL BEAR SAME RELATIONSHIP TO FINISH GRADE AS IT BORE TO PREVIOUS EXISTING GRADE.

SHRUB PLANTING
N. T. S.

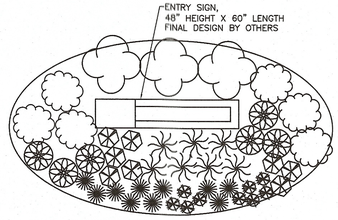

ENTRY SIGN LANDSCAPING
N. T. S.

NOTES:
SEE LANDSCAPE PLAN FOR PLANT SELECTION.

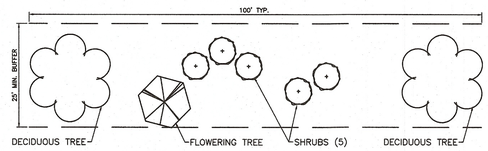

PERIMETER LANDSCAPE BUFFER
N. T. S.

NOTES:
SEE LANDSCAPE PLAN FOR PLANT SELECTION.



BLACK LEGEND ON WHITE BACKGROUND
R2-1

"SPEED LIMIT" SIGN
N.T.S.

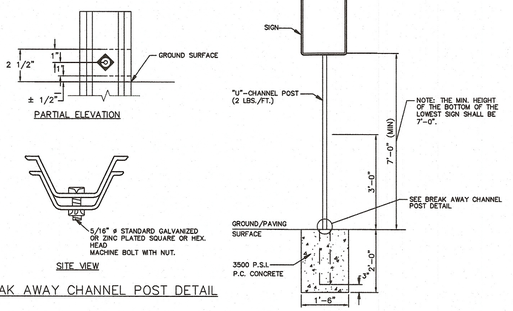

BREAK AWAY CHANNEL POST DETAIL

TRAFFIC SITE SIGN BASE DETAIL
N. T. S.

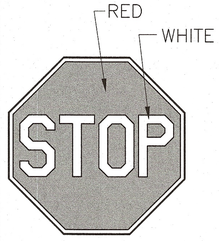

SIZE: 36"x36"

R1-1 STOP SIGN
N. T. S.

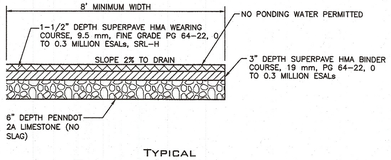

TYPICAL
BITUMINOUS WALKWAY
N. T. S.

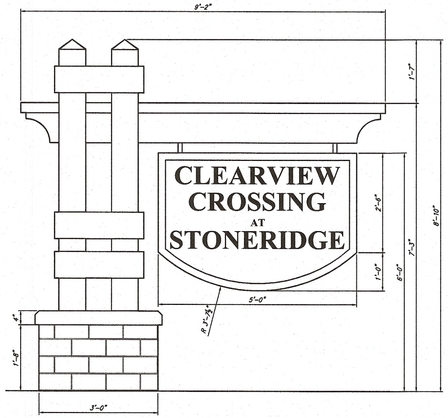

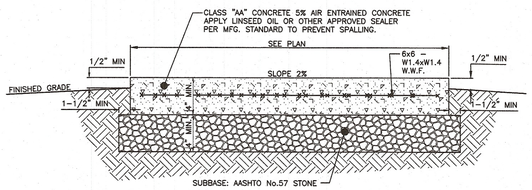

NOTES:
1. WALK SHALL BE CROSS SCORED EVERY FIVE FOOT (5'). 1/2" PREFORMED EXPANSION JOINTS EVERY 20 FEET. WALK SHALL HAVE A STIFF BROOM FINISH W/ TROWELED EDGES.

TYPICAL
REINFORCED CONCRETE SIDEWALK
N. T. S.

TYPICAL
MARONDA HOMES ENTRY SIGN
N. T. S.

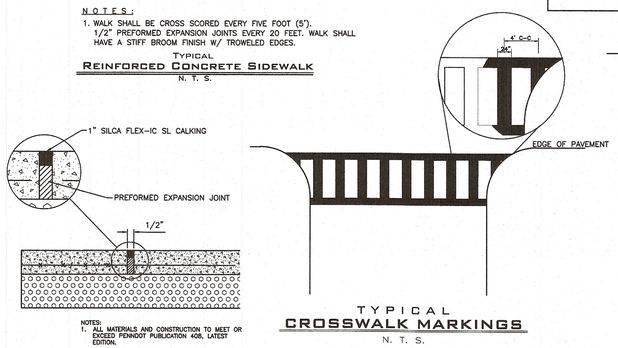

NOTES:
1. ALL MATERIALS AND CONSTRUCTION TO MEET OR EXCEED PENNDOT PUBLICATION 408, LATEST EDITION.

TYPICAL
CROSSWALK MARKINGS
N. T. S.

CONCRETE SIDEWALK EXPANSION JOINT DETAIL
N. T. S.

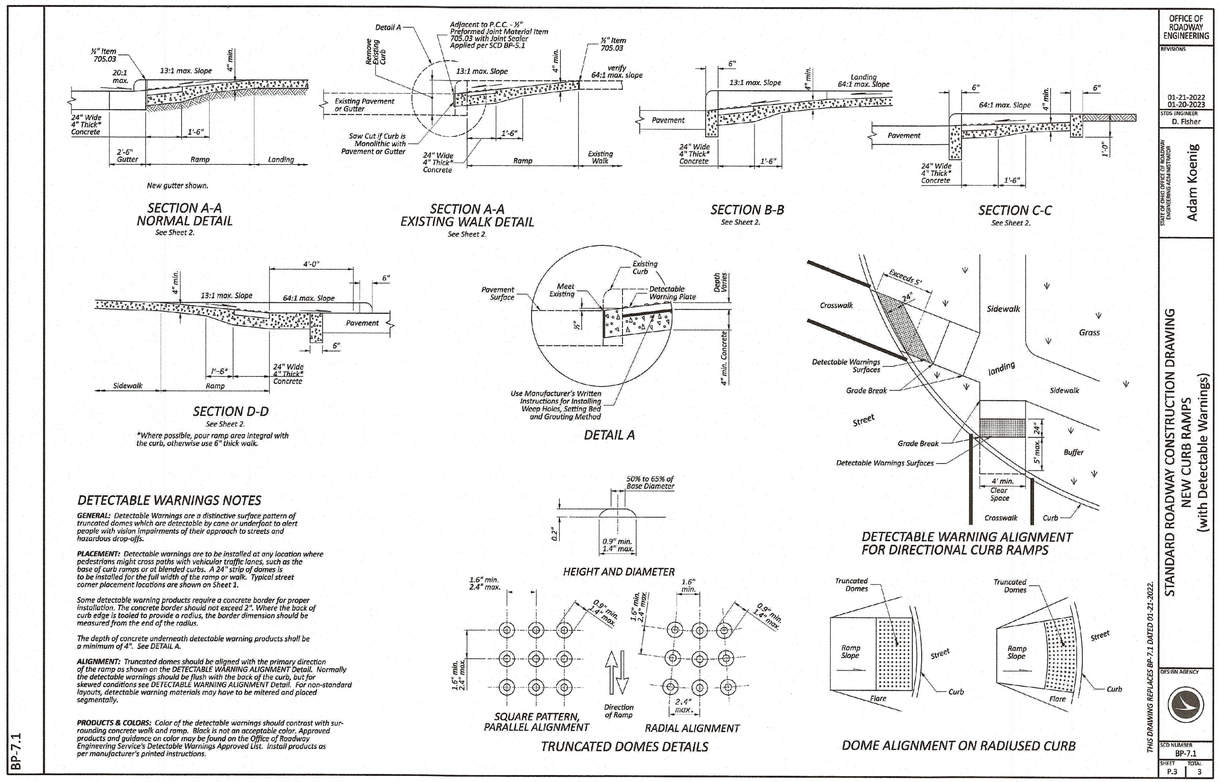

DETECTABLE WARNINGS NOTES

GENERAL: Detectable Warnings are a distinctive surface pattern of truncated domes which are detectable by cane or underfoot to alert people with vision impairments of their approach to streets and hazardous drop-offs.

PLACEMENT: Detectable warnings are to be installed at any location where pedestrians might cross paths with vehicular traffic lanes, such as the base of curb ramps or at blended curbs. A 24" strip of domes is to be installed for the full width of the ramp or walk. Typical street corner placement locations are shown on Sheet 1.

Some detectable warning products require a concrete border for proper installation. The concrete border should not exceed 2". Where the back of curb edge is tooled to provide a radius, the border dimension should be measured from the end of the radius.

The depth of concrete underneath detectable warning products shall be a minimum of 4". See DETAIL A.

ALIGNMENT: Truncated domes should be aligned with the primary direction of the ramp as shown on the DETECTABLE WARNING ALIGNMENT Detail. Normally the detectable warnings should be flush with the back of the curb, but for skewed conditions see DETECTABLE WARNING ALIGNMENT Detail. For non-standard layouts, detectable warning materials may have to be mitered and placed segmentally.

PRODUCTS & COLORS: Color of the detectable warnings should contrast with surrounding concrete walk and ramp. Black is not an acceptable color. Approved products and guidance on color may be found on the Office of Roadway Engineering Service's Detectable Warnings Approved List. Install products as per manufacturer's printed instructions.

BP-7.1

OFFICE OF ROADWAY ENGINEERING

REVISIONS: 01-21-2022, 01-20-2023

STDS. ENGINEER: D. Fisher

SEAL OF CHIEF ENGINEER OF ROADWAY ENGINEERING: Adam Koenig

STANDARD ROADWAY CONSTRUCTION DRAWING
NEW CURB RAMPS
(with Detectable Warnings)

THIS DRAWING REPLACES BP-7.1 DATED 01-21-2022.

OES/N AGENCY

SCD NUMBER: BP-7.1

SHEET: P.3 TOTAL: 3

STATE OF OHIO — JOHN HEYL — E 88157 — REGISTERED PROFESSIONAL ENGINEER

Scale: As Noted	Drawn By	Checked By	Approved By

No.	Date	Description	By	No.	Date	Description	By	No.	Date	Description	By

LSSE Civil Engineers and Surveyors
5980 Wilcox Place, Suite J
Dublin, Ohio 43016
Phone: (614) 395-1661
Corporate: (412) 264-4400
email: info@lsse.com

Filename: 308-343SDT.dwg
Date: May 2023

Maronda Homes
5900 Wilcox Place
Dublin, Ohio 43016

Clearview Crossing
at Stone Ridge
Final Development Plans
Situated In
City of Springboro, Warren County, Ohio

Sheet Title: Site Details
Drawing No.: 308-343-15
Sheet No.: 15 of 19

N:\PROJ\308\308-343 Springboro\DWG\308-343SDT.dwg Layout=15 Site Details User=Jason Mckeighe Plotted=4/12/2023 1:48 PM

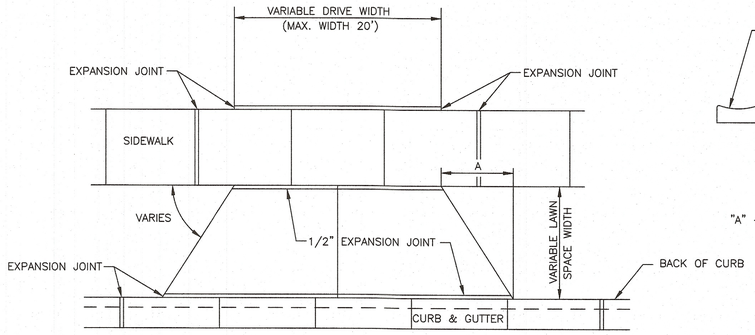

STANDARD DRIVE APPROACH

GENERAL NOTES

1. DRIVE APPROACHES SHALL NOT BE POURED MONOLITHICLY WITH CURB & GUTTER.
2. MAXIMUM JOINT SPACING SHALL BE 10' LONGITUDINALLY AND TRANSVERSELY.
3. COMPACTED GRAVEL MAY BE USED FOR LEVELING COURSE UNDER CONCRETE DRIVE APPROACH.
4. WHERE ASPHALTIC CONCRETE PAVEMENT IS DISTURBED, THE ASPHALT SHALL BE REPLACED AS DIRECTED BY THE ENGINEER.
5. WHERE SIDEWALK EXISTS PRIOR TO CONSTRUCTION OF DRIVE APPROACH, THE REPLACEMENT OF THE SIDEWALK IS NECESSARY FOR PROPER DEPTH.
6. ANY VARIATION FROM THE ABOVE STANDARD MUST BE APPROVED BY THE ENGINEER.
7. ALL CONCRETE FOR CURB AND GUTTER, SIDEWALK, AND DRIVE APPROACH SHALL MEET THE REQUIREMENTS SET FORTH IN ITEM 608 (ODOT SPECS.) CONCRETE SHALL BE CLASS C.
8. EXPANSION MATERIAL TO BE PROFLEX VINYL EXPANSION MATERIAL AND SHALL MEET ASTM D-1752 SECTION FIVE OR AASHTO M153-98 SPECIFICATION.

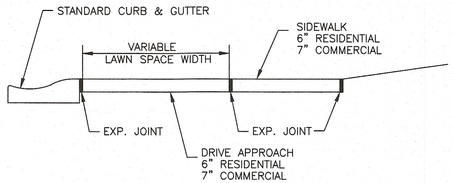

"A" – EQUAL TO LAWN SPACE WIDTH OR 5 FT. (WHICHEVER IS LESS)

TRANSITION FROM STANDARD CURB SECTION TO DROP CURB SECTION TO BE MADE IN 18" DISTANCE FROM DRIVEWAY.

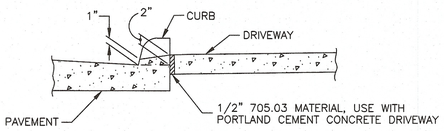

DROP CURB DETAILS AT DRIVEWAYS

RESIDENTIAL AND COMMERCIAL DRIVEWAY APPROACHES

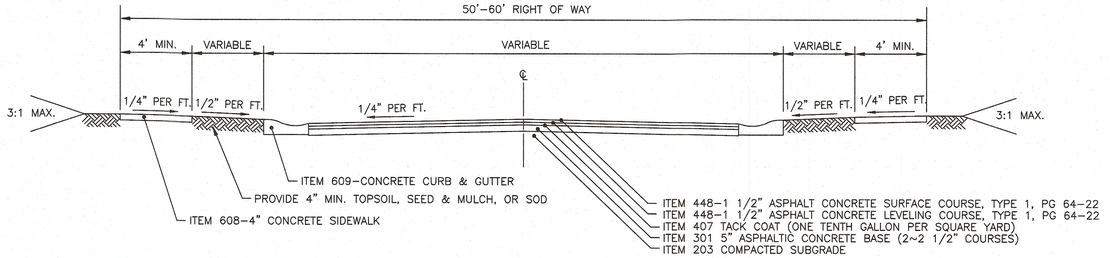

ASPHALT CONCRETE PAVEMENT & ASPHALT CONCRETE BASE

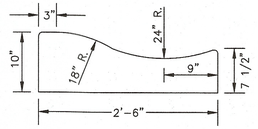

CONCRETE CURB & GUTTER SECTION

NOTES FOR CONCRETE CURB & GUTTER

CAST IN PLACE

1. ONE (1) INCH NON EXTRUDING EXPANSION JOINTS EVERY 40 FEET, AT BOTH ENDS, OF STRUCTURES (CATCH BASINS) AND POINTS OF CURVE AND TANGENCY AT INTERSECTIONS.

2. CONTRACTION JOINTS EVERY FIVE (5) FEET FORMED BY 1/8" THICK TEMPLATES. DEPTH SHALL BE A MINIMUM OF 2".

SLIP FORM

1. ONE (1) INCH NONEXTRUDING EXPANSION JOINT AT BOTH ENDS OF STRUCTURES (CATCH BASINS) AND POINTS OF CURVE AND TANGENCY AT INTERSECTIONS AND UPON SUSPENSION OF WORK FOR 30 MINUTES OR MORE.

2. CONTRACTION JOINTS EVERY FIVE (5) FEET, 1/8" WIDE, CONSTRUCTED BY THE USE OF A GROOVING TOOL, OR SAWED TO A DEPTH OF AT LEAST TWO (2) INCHES.

TYPICAL LOCAL STREET SECTIONS

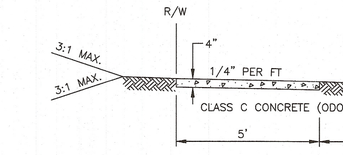

SECTION A-A

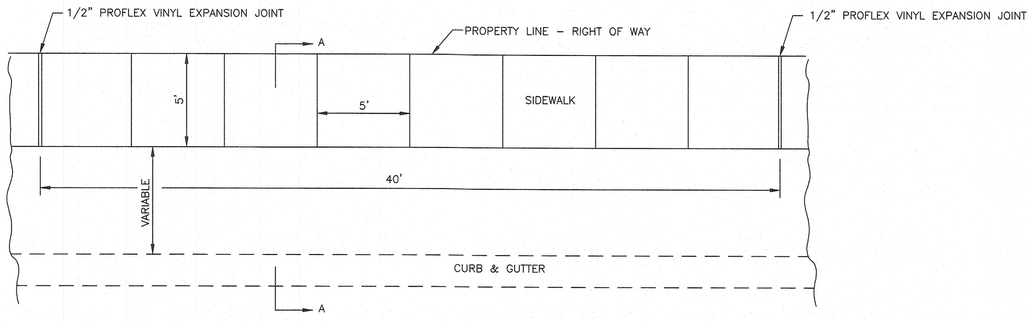

PLAN VIEW

NOTE

1. PROVIDE LIGHT BROOM FINISH TO ALL EXPOSED SURFACES
2. PROVIDE A SLICK FINISH ON ALL EDGES AFTER BROOM FINISH.
3. CONCRETE SIDEWALK CONSTRUCTION SHALL CONFORM TO ODOT ITEM 608
4. PROVIDE EXPANSION JOINTS EVERY 40'

CONCRETE SIDEWALK DETAIL

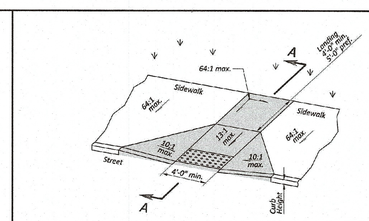

Type A1 (Perpendicular with flared sides)

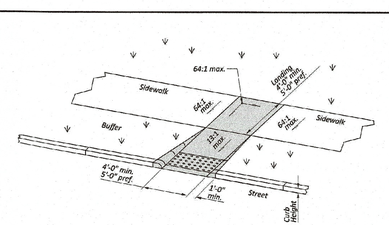

Type A2 (Perpendicular with returned curb)

PERPENDICULAR CURB RAMP DETAILS

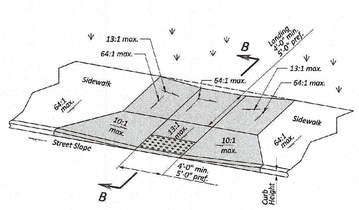

Type C1 (Combined with flared sides)

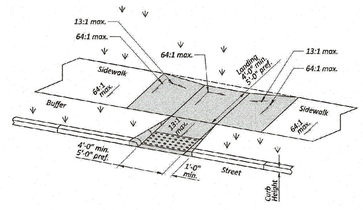

Type C2 (Combined with returned curb)

COMBINED CURB RAMP DETAILS

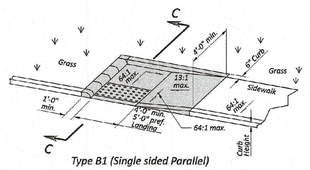

Type B1 (Single sided Parallel)

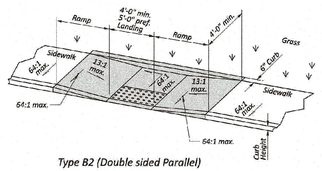

Type B2 (Double sided Parallel)

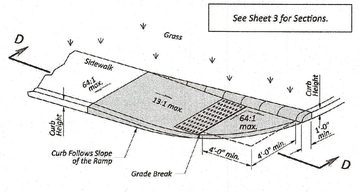

Type B3 (Single sided Parallel)

PARALLEL CURB RAMP DETAILS

See Sheet 3 for Sections.

NOTES CONTINUED

The running slope of the curb ramp shall be a 13:1 maximum or flatter. In existing sidewalks, where the maximum ramp slope is not feasible due to site constraints (e.g. utility poles or vaults, right-of-way limits) it may be reduced as follows:

A) 10:1 for a max. rise of 6".
B) 8:1 for a max. rise of 3".
C) 6:1 over a max. run of 2'-0" for historic areas where a flatter slope is not feasible.

To prevent chasing the grade indefinately, the transition from existing sidewalk to the shaded curb ramp area is not required to exceed 15 feet in length.

While ramps may be skewed to the crosswalk, the entire lower landing area must fall within the cross walk that the ramp serves and cannot be located in the traveled lane of opposing traffic.

The counter slope of the gutter or street at the foot of a curb ramp, landing, or blended transitions shall be 20:1 or flatter.

The bottom edge of the ramp shall change planes perpendicular to the landing.

The edge of the curb shall be flush with the edge of the adjacent pavement and gutter and surface slopes that meet grade breaks shall also be flush.

Ramp landings shall be 4' min. x 4' min. with a 64:1 or flatter cross slope and running slope.

DETECTABLE WARNINGS: *Install Detectable Warnings on each curb ramp with approved materials, as shown on Sheet 3. Install these proprietary products as per manufacturer's written instructions.*

DRAINAGE: *Contractor is to ensure the base of each constructed curb ramp allows for proper drainage, without exceeding allowable cross slope or ramp slopes. Vertical change in level exceeding ¼" between the 1) pavement and gutter, and 2) gutter and ramp, are not allowed.*

SURFACE TEXTURE: *Texture concrete surfaces by coarse brooming transverse to the ramp slopes to be rougher than the adjacent walk.*

JOINTS: *Provide expansion joints in the curb ramp as extensions of walk joints and consistent with Item 608.03 requirements for a new concrete walk. Provide a ½" Item 705.03 expansion joint filler around the edge of ramps built in existing concrete walks. Lines shown on this drawing indicate the ramp edges and slope changes, and do not necessarily indicate joint lines.*

BP-7.1

OFFICE OF ROADWAY ENGINEERING

REVISIONS

01-21-2022
01-20-2023

STEVEN ENGINEER
D. Fisher

STATE OF OHIO DEPARTMENT OF TRANSPORTATION
Adam Koenig

STANDARD ROADWAY CONSTRUCTION DRAWING
NEW CURB RAMPS
(with Detectable Warnings)

DESIGN AGENCY

SCD NUMBER
BP-7.1

SHEET P-2 | TOTAL 3

THIS DRAWING REPLACES BP-7.1 DATED 01-21-2022.

STATE OF OHIO
JOHN HEYL
E 98187
REGISTERED
PROFESSIONAL ENGINEER

N:\PROJ\308\308-343 Springboro\DWG\308-343SDT.dwg Layout=16 Site Details User=Jason McMullinger Plotted=4/12/2023 1:48 PM

Scale: As Noted	Drawn By	Checked By	Approved By

No.	Date	Description	By

No.	Date	Description	By

No.	Date	Description	By

LSSE Civil Engineers and Surveyors
5980 Wilcox Place, Suite J
Dublin, Ohio 43016
Phone: (614) 395-1661
Corporate: (412) 264-4400
email: info@lsse.com

Filename: 308-343SDT.dwg
Date: May 2023

Maronda Homes
5900 Wilcox Place
Dublin, Ohio 43016

Clearview Crossing
at Stone Ridge
Final Development Plans
Situated In
City of Springboro, Warren County, Ohio

Sheet Title: Site Details
Drawing No.: 308-343-16
Sheet No.: 16 of 19

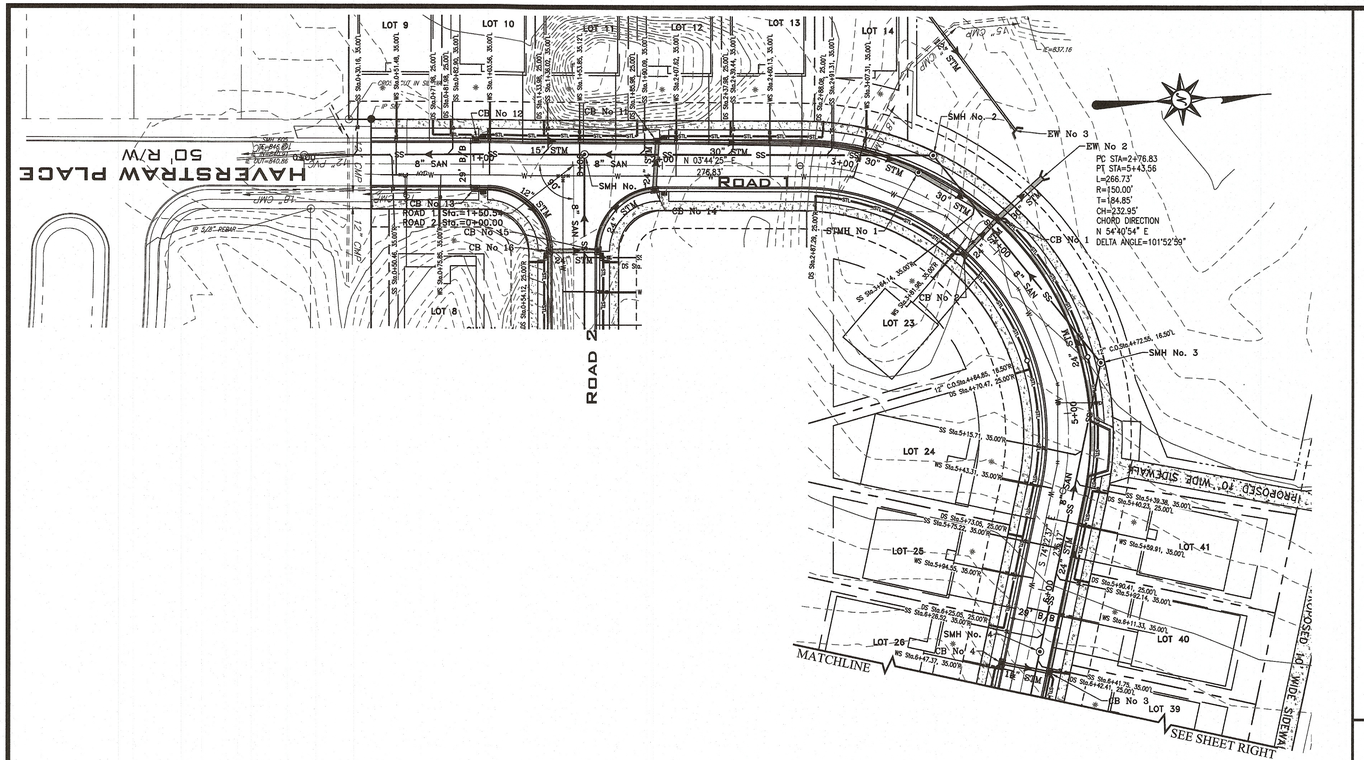



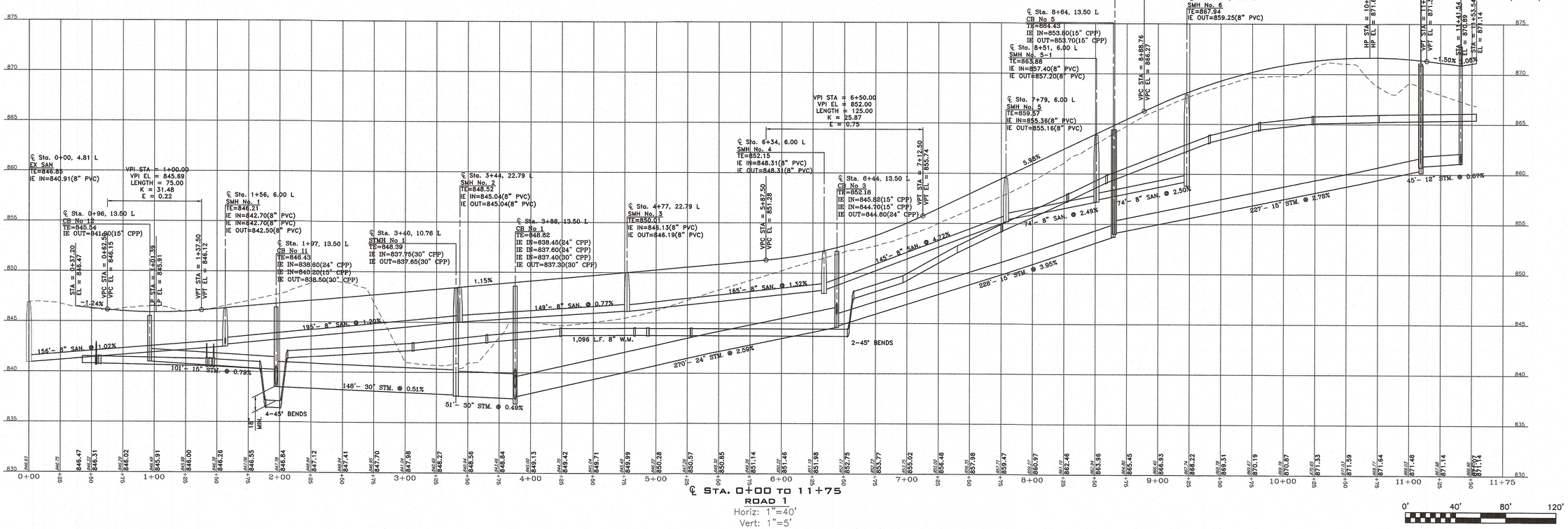

℄ STA. 0+00 TO 11+75
ROAD 1
Horiz: 1"=40'
Vert: 1"=5'

0' 40' 80' 120'

STATE OF OHIO
JOHN HEYL
E-68187
REGISTERED
PROFESSIONAL ENGINEER

Scale:	No.	Date	Description	By	No.	Date	Description	By	No.	Date	Description	By
H: 1"=40'												
V: 1"= 5'												
Drawn By / Checked By / Approved By												

LSSE Civil Engineers and Surveyors
5980 Wilcox Place, Suite J
Dublin, Ohio 43016
Phone: (614) 395-1661
Corporate: (412) 264-4400
email: info@lsse.com

Filename: 308-343RD.dwg
Date: May 2023

Maronda Homes
5900 Wilcox Place
Dublin, Ohio 43016

Clearview Crossing
at Stone Ridge
Final Development Plans
Situated in
City of Springboro, Warren County, Ohio

Sheet Title: Plan and Profile
Drawing No. 308-343-17
Sheet No. 17 of 19

N:\PROJ\308\308-343 Springboro(DRD)\308-343RD.dwg Layout=17 Plan and Profile User=Jason McBeagle Plotted=4/17/2023 1:43 PM

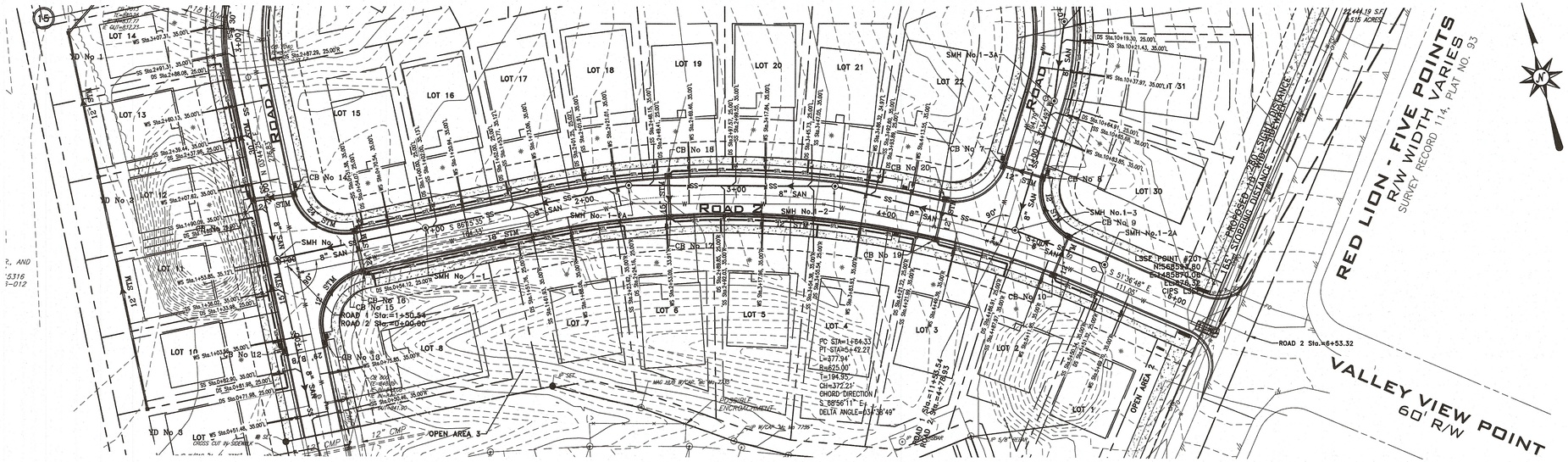

EXISTING LEGEND

- CONTOUR (1-ft)
- CONTOUR (5-ft)
- CURB (Concrete)
- FENCELINE W/ POST
- GUIDERAIL
- LIGHT STANDARD
- MANHOLES: SANITARY, STORM, TELEPHONE, MISC
- PAVEMENT EDGE
- DRIVE EDGE
- PROPERTY LINE (Municipal Boundary)
- PROPERTY LINE (Subject Parcel)
- PROPERTY LINE (Parcel)
- RIGHT-OF-WAY LINE
- EASEMENT LINE
- SETBACK LINE
- SIGN
- DECIDUOUS TREE
- TREELINE
- BUSH
- UTILITY LINE (Electric)
- UTILITY LINE (Underground Telephone)
- UTILITY LINE (Fiber Optic)
- UTILITY LINE (Gas) W/ BOX, METER, MARKER, AND VALVE
- UTILITY LINE (Sanitary Sewer) W/ MANHOLES
- UTILITY LINE (Storm Sewer) W/ CATCH BASIN AND MANHOLE
- UTILITY LINE (Telephone) W/ POLE, OVERHEAD WIRE AND GUY WIRE
- UTILITY LINE (Water) W/ BOX, METER, HYDRANT AND VALVE
- B-II EXCEPTION
- EXISTING WETLAND

PROPOSED LEGEND

- PROPOSED STREET LIGHT STANDARD
- PROPERTY LINE (PARCEL)
- PROPERTY LINE (R.O.W.)
- PROPERTY LINE (EASEMENT)
- PROPERTY LINE (SETBACK)
- CENTERLINE
- PROPOSED CONCRETE CURB AND GUTTER
- ADA RAMP
- CROSSWALK

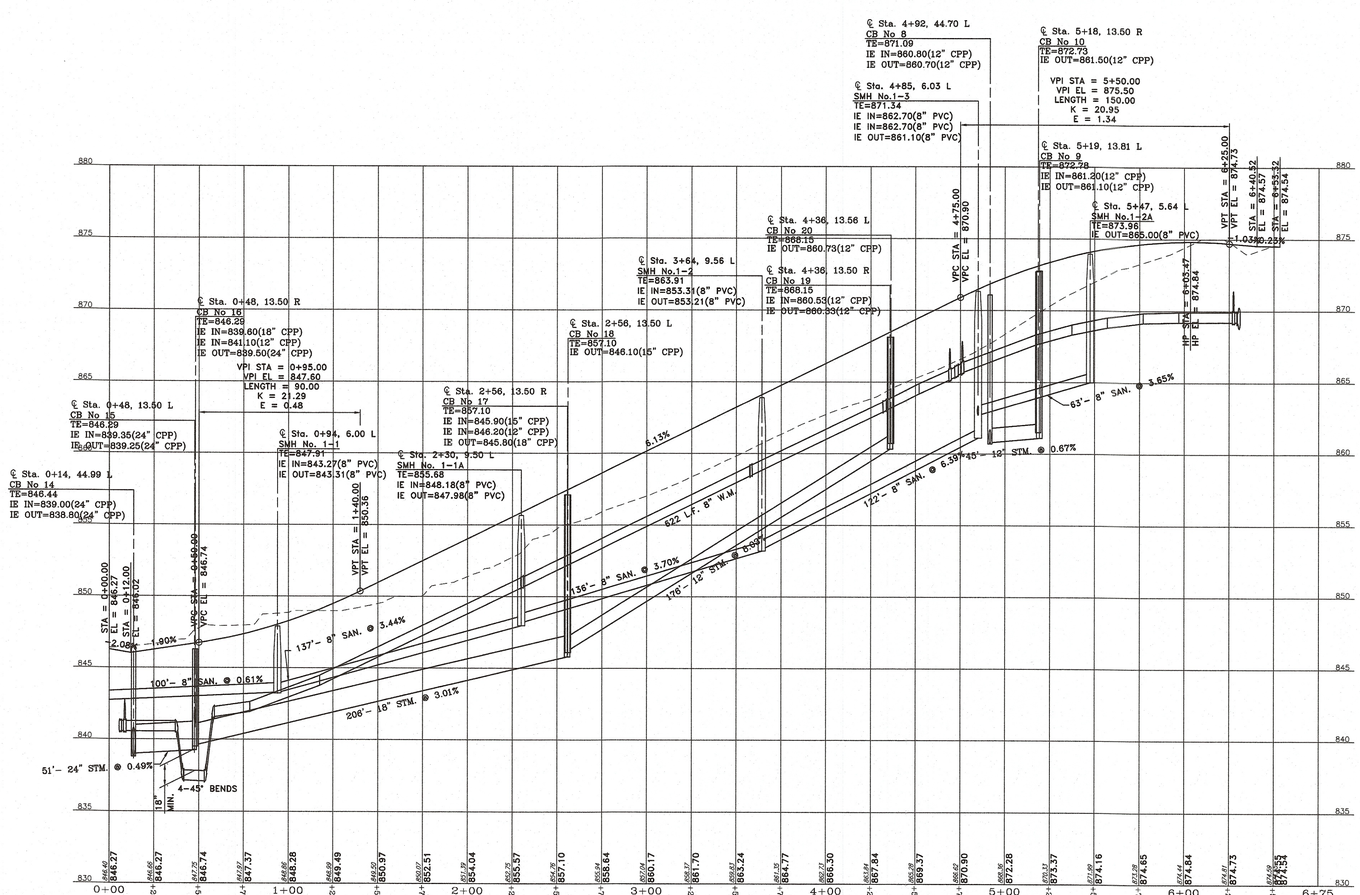

℄ STA. 0+00 TO 6+75
ROAD 2
Horiz: 1"=40'
Vert: 1"=5'

0' 40' 80' 120'

STATE OF OHIO
JOHN HEYL
E-88157
REGISTERED
PROFESSIONAL ENGINEER

Scale:	No.	Date	Description	By	No.	Date	Description	By	No.	Date	Description	By
H: 1"=40'												
V: 1"= 5'												
Drawn By / Checked By / Approved By												

LSSE Civil Engineers and Surveyors
5980 Wilcox Place, Suite J
Dublin, Ohio 43016
Phone: (614) 395-1661
Corporate: (412) 264-4400
email: info@lsse.com

Filename: 308-343RD.dwg
Date: May 2023

Maronda Homes
5900 Wilcox Place
Dublin, Ohio 43016

Clearview Crossing
at Stone Ridge
Final Development Plans
Situated In
City of Springboro, Warren County, Ohio

Sheet Title: Plan and Profile
Drawing No.: 308-343-18
Sheet No.: 18 of 19

N:\PROJ\308\308-343 Springboro\DWG\308-343RD.dwg Layout=18 Plan and Profile User=Jason Aldkofer Plotted=6/7/2023 1:43 PM

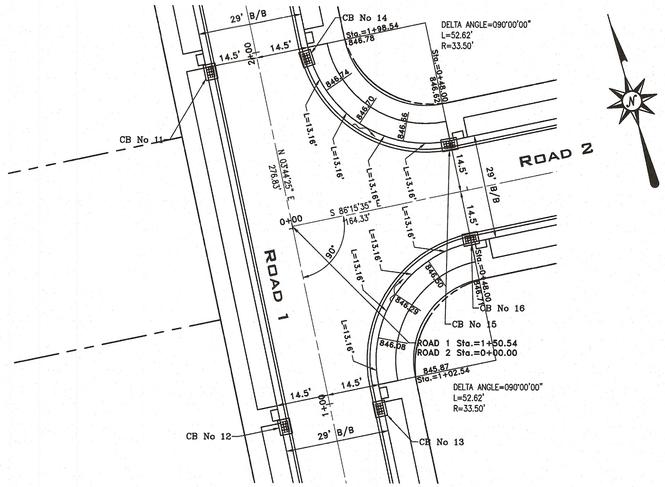

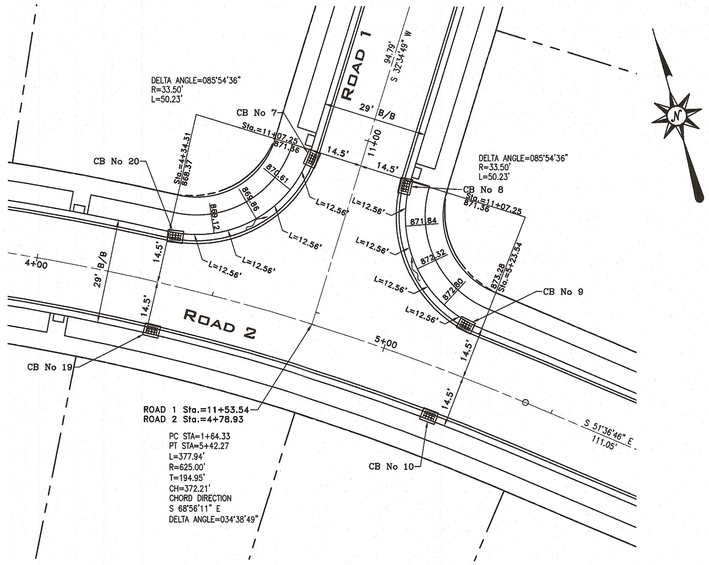

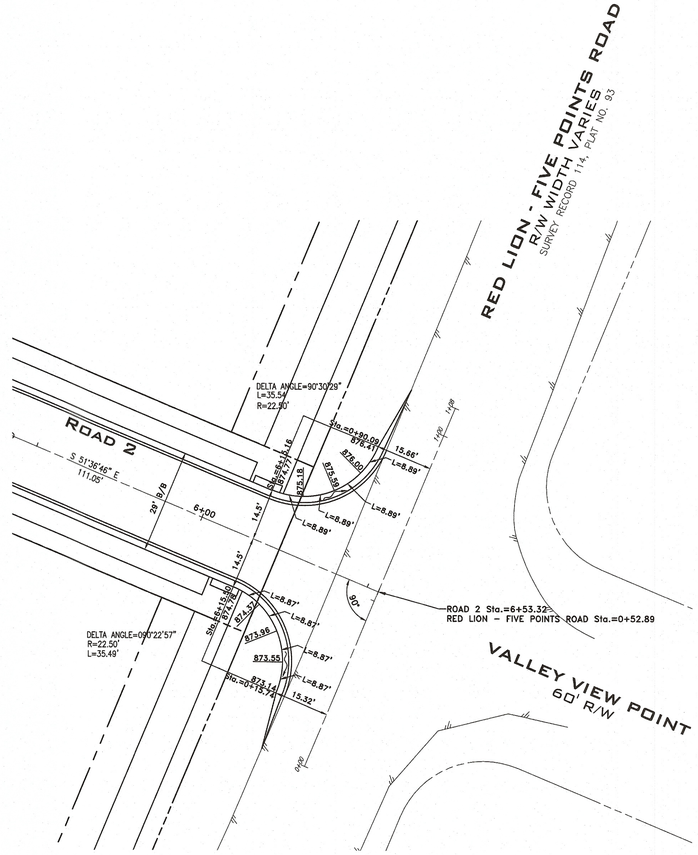

0' 20' 40' 60'

STATE OF OHIO
JOHN HEYL
E-88187
REGISTERED
PROFESSIONAL ENGINEER

Scale:	Drawn By	Checked By	Approved By
1"=20'			

No.	Date	Description	By

No.	Date	Description	By

No.	Date	Description	By

LSSE
Civil Engineers and Surveyors

5980 Wilcox Place, Suite J
Dublin, Ohio 43016
Phone: (614) 395-1661
Corporate: (412) 264-4400
email: info@lsse.com

Filename: 308-343RD.dwg
Date: May 2023

Maronda Homes
5900 Wilcox Place
Dublin, Ohio 43016

Clearview Crossing
at Stone Ridge
Final Development Plans
Situated In
City of Springboro, Warren County, Ohio

Sheet Title: Intersection Detail
Drawing No.: 308-343-19
Sheet No.: 19 of 19

M:\PROJ\308\308-343 Springboro\DWG\308-343RD.dwg Layout=19 Intersection Detail User=Jason McMonigle Plotted=4/12/2023 3:27 PM

STATE OF OHIO

SS:

COUNTY OF MONTGOMERY

The foregoing instrument was acknowledged before me, a Notary Public this 22 day of September 2022, by Scott D. Wright, Owner, Executor and Trustee of the Donald C. Wright Marital Trust acknowledged the signing thereof to be his voluntary act and deed.

IN TESTIMONY THEREOF, I have hereunto subscribed my name and affixed my seal on this day and year aforesaid.

NOTARY PUBLIC:
My Commission Expires:

JEFFREY B. WALTHER, Notary Public
In and for the State of Ohio
My Commission Expires April 4 2023

STATE OF OHIO

COUNTY OF MONTGOMERY SS:

The foregoing instrument was acknowledged before me this 22 day of, September 2022, by Robert Abernathy, Agent for Stone Ridge Development Ltd. Acknowledged the signing thereof to be his voluntary act and deed.

IN TESTIMONY THEREOF, I have hereunto subscribed my name and affixed my seal on this day and year aforesaid.

JEFFREY B. WALTHER, Notary Public
In and for the State of Ohio
My Commission Expires April 4 2023

NOTARY PUBLIC:
My Commission Expires: April 4, 2023

CLEARVIEW CROSSING AT STONE RIDGE
RESIDENTIAL DEVELOPMENT
ROUTE 73; RED LION-FIVE POINTS ROAD
CITY OF SPRINGBORO
WARREN COUNTY, OH

FINAL DEVELOPMENT PLANS

PROJECT NARRATIVE AND SUPPLEMENTAL INFORMATION

EXISTING CONDITIONS

The proposed site is an undeveloped portion of the existing Stoneridge residential development, located at the intersection of State Route 73 and Red Lion-Five Points Road, in the City of Springboro, Ohio. The 12.08-acre site was rezoned to PUD-R Planned Unit Development – Residential, by ordinance 0-23-3 and the General Plan was approved by resolution R-23-8 by Springboro City Council, adopted April 26, 2023.

PROPOSED DEVELOPMENT

Maronda Homes of Cincinnati, LLC is proposing to construct 41 residential lots; consisting of 41 single-family dwellings, slab on grade. Maronda will offer there Americana series home with a variety of façade material options. All siding will be cementitious plank per conditions of General Plan approval. Details regarding home styles, floor plans, and materials are provided as part of this submission. Please see the architectural exhibit.

Single family lots are proposed at 52’ wide by 105’ depth; minimum lot sizes shall be 5,460 square feet, with an average lot size of 6,370 sq. ft.; setbacks would be minimum 25’ front yard; minimum 5’ side yard, and minimum 15’ rear yard. Parking for individual homes has been provided as follows: two driveway spaces and two (2) vehicle garage spaces. No garage area will exceed 50% of the front façade. All streets are public streets. On-street visitor parking is permitted. The ROW is proposed as 50’ width with 5’ sidewalks and 5.5’ wide tree lawn. Streets will be designated as public. Street and roads shall be identified with approved signs per section 505.2. New and existing homes shall be provided with approved address identification per section 505.1. A 25’ buffer along State Route 73 and Red Lion-Five Point Road will incorporate a 10’ wide public bituminous path. A 10’ wide bituminous path will connect the path from State Route 73 to the internal sidewalk at the proposed mailbox cluster. The final design of the mailbox cluster will be to USPS standards. A bituminous path through the open space in the north east corner of the property will provide an alternate pedestrian connection between the 10’

paths adjacent to the primary roads. A 10' buffer has been provided along the western and southern boundaries planted with evergreen trees. The corner of the site located at the intersection of State Route 73 and Red Lion-Five Points Road will remain open and naturalized. Buffers will be landscaped with a combination of existing and supplemental vegetation. Refer to the landscape plans for details. 25% of the site is required to be dedicated to open space. 3.62 Acres of Open Space is proposed, which is 29.97% of the site area. The HOA shall manage and maintain open space and stormwater management facilities.

Utilities (water, sanitary sewer) services will be provided. Water service will be provided via the 12-inch water line in Red Lion – Five Points Road. There is an existing 30' wide sanitary easement along the western property line. The stormwater will be managed in a single wet pond facility. All Stormwater will be managed on site and discharged per NPDES standards and requirements. Please see respective plans for details.

The following site investigation studies and reports were provided by the property owner. Maronda Homes and LSSE have not undertaken independent verification of the information provided.

A Geotechnical survey was provided by Alt & Witzig Engineering, Inc. December of 2019. The report included soil sampling, analysis and recommendations for slope construction. The survey was prepared for a commercial use. Additional borings were taken across the property. The Geotechnical report was previously provided to the City. A USDA soil survey was downloaded and previously provided to the City. An aquatic resources survey was made and report is enclosed within this submittal.

A Phase 1 Environmental Site Assessment was performed by MAKSolve, June of 2020. The Environmental Assessment report was previously provided to the City.

A traffic impact study (TIS) conducted by TEC Engineering, Inc. August 2022 was previously provided to the City. The TIS concludes "the proposed development generally has insignificant impact on the surrounding road network." The TIS was conducted based on a prior proposed layout with differing access points and may need to be revised to reflect the current proposed layout. Under consideration is a recommendation to add a northbound left turn lane at the proposed entrance opposite of Valley View Point, since the pavement structure is already in place and the turning lane can be created by simply revising the pavement marking along the roadway. Our traffic engineer will work with local authorities to design all proposed entrances per City, County and State standards.

SUMMARY

Zoning: PUD-R (R-3 underlay)

Site Data:

- Total Site Area: 12.08 Acres
- Lot density: 3.4 DU/AC
- 41 total lots (single family)
- Single Family Lots: 52' width x 105' depth
    - Minimum lot size: 5460 sq. ft. / Average lot size 6,370 sq. ft.
    - Front yard setback: 25'
    - Rear yard setback: 15'
    - Side yard setback: 5' minimum
- 3.63 Acres Open Space – 29.97%

MARONDA Homes

Clearview Crossing at Stoneridge

City of Springboro Ohio



HOME CONCEPTS

Maronda Homes offers a variety of single family detached home styles, with a selection of material finishes and feature options.

The home concepts on the following pages are part of the Americana Series. The concepts shared are representational. Final designs, features and material selection will be made at the time of purchase by the home owner. All homes will conform to the Maronda Homes anti-monotony standards.

DREAM. BUILD. *Live.*

MARONDA Homes

AMERICANA SERIES
THE AVALON





Material options: *Front facade*

- *Brick*
- *Stone (front facade)*

Non-street facade

- *Cementitious siding*

Roof

- *Premium shingles*

DREAM. BUILD. *Live.*

Quality Since 1972

MARONDA Homes

AMERICANA SERIES
THE AVALON

FIRST FLOOR LAYOUT

- *1,498-2,418 finished sq. ft.*
- *First Floor Owner Suite*
- *2-3 Bedrooms, 2 Bathrooms*
- *2 Car Garage*
- *Garage represents 50% of front facade.*

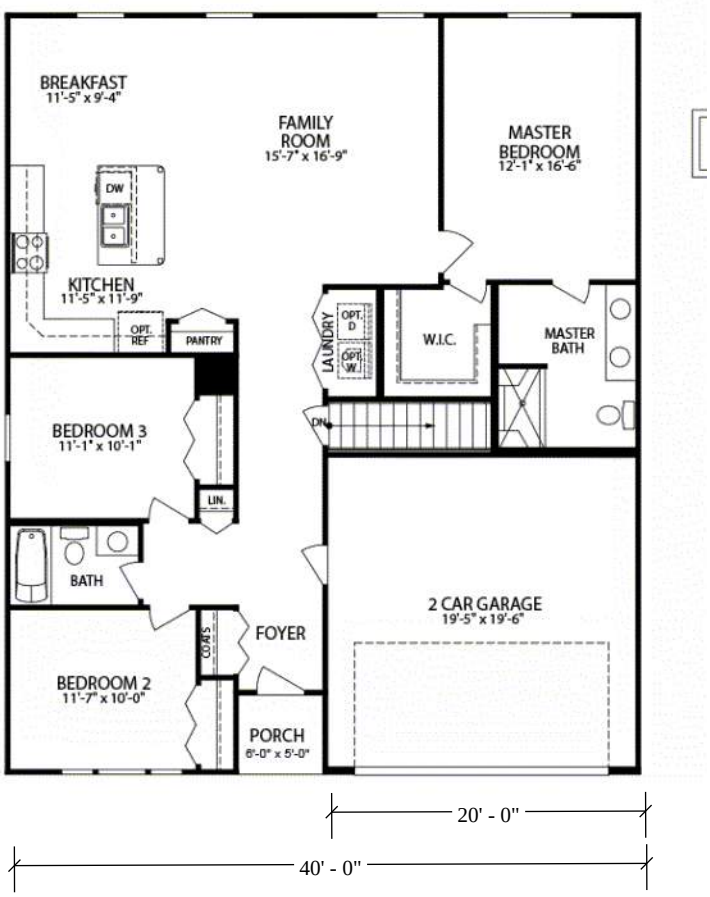

SECOND FLOOR LAYOUT OPTION

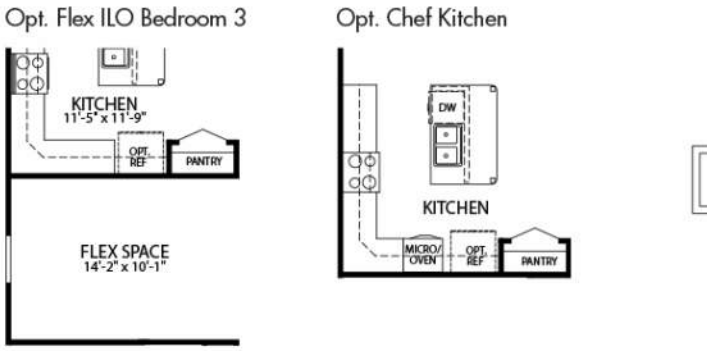

DREAM. BUILD. *Live.*

Quality Since 1972

MARONDA Homes

AMERICANA SERIES
THE SOMERSET





Material options:
Front facade
- *Brick*
- *Stone (front facade)*

Non-street facade
- *Cementitious siding*

Roof
- *Premium shingles*

DREAM. BUILD. *Live.*

Quality Since 1972

MARONDA Homes

AMERICANA SERIES
THE SOMERSET

FIRST FLOOR LAYOUT

- *2,382 - 3,365 finished sq. ft.*
- *Second Floor Owner Suite*
- *3-4 Bedrooms, 2.5-3.5 Bathrooms*
- *2-3 Car Garage*
- *Garage represents 50% of the front facade.*

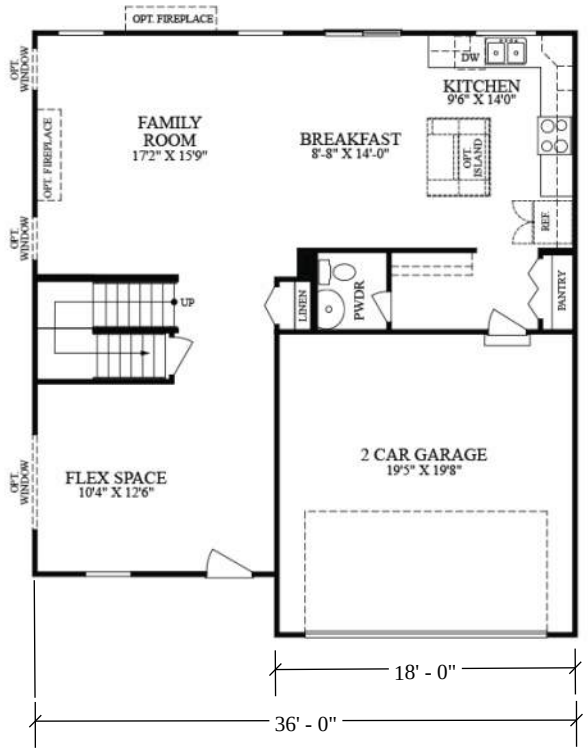

SECOND FLOOR LAYOUT



Opt. Sunroom with Opt. Island and Second Island



Opt. Chef's Kitchen

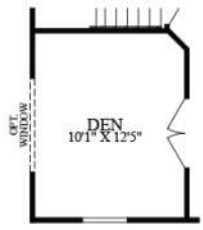

Opt. Den ILO Flex

DREAM. BUILD. *Live.*

Quality Since 1972

MARONDA Homes

HOME CONCEPTS

For more information visit
marondahomes.com

Ask your New Home Specialist for details about additional options to this floor plan to meet your unique lifestyle and needs.

Floor plans and elevations are artist's renderings for Illustrative purposes and not part of a legal contract. Features, sizes, options, and details are approximate and will vary from the homes as built. Optional items shown are available at additional cost.

Maronda Homes reserves the right to change and/or alter materials, specifications, features, dimensions and designs without prior notice or obligation.
©2019 Maronda Homes, Inc. All Rights Reserved.

DREAM. BUILD. *Live.*

APPLICATION—PLANNED UNIT DEVELOPMENTS
CITY OF SPRINGBORO PLANNING COMMISSION

☐ REZONING/GENERAL PLAN ☒ FINAL DEVELOPMENT PLAN ☐ RECORD PLAN ☐ VARIANCE

The undersigned requests the approval identified above. Approvals subject to expiration provided for in Chapter 1266 of Planning & Zoning Code. For all approvals under this application, it is understood that it shall only authorize the approval described in this application, subject to any conditions or safeguards required by the Planning Commission, and/or City Council.

- ☐ Owner
- ☒ Agent
- ☐ Lessee
- ☐ Signed Purchase Contract

APPLICANT NAME: SCOTT CSENDES

Address: 700 BROADWAY ST

CINCINNATI, OH 45202

Telephone No. (513) 864-8620

Fax No. ( ) _____

Email Address SCOTT.CSENDES@KZF.COM

PROPERTY OWNER NAME (IF OTHER): CITY OF SPRINGBORO CONTACT: CHRIS POZZUTO

Address: 320 W. CENTRAL AVE.

SPRINGBORO, OH 45066

Telephone No. (937) 748-4352

Property Address or General Location: GARDNER ROAD

Parcel Number(s): 0415480012 Acreage: 4.0625

PUD Category: ☐ Residential ☐ Retail ☒ Office ☐ Manufacturing ☐ Mixed Use

If Mixed Use, Acreage in Each Category: _____

For Residential Proposed Density _____ Number of Residential Units _____

Proposed Use: FIRE STATION

The applicant or representative who is authorized to speak on behalf of the request must also be present at all meetings.

(Signature of Applicant and/or Agent) (Date) 6/23/23

SCOTT CSENDES
Printed Name

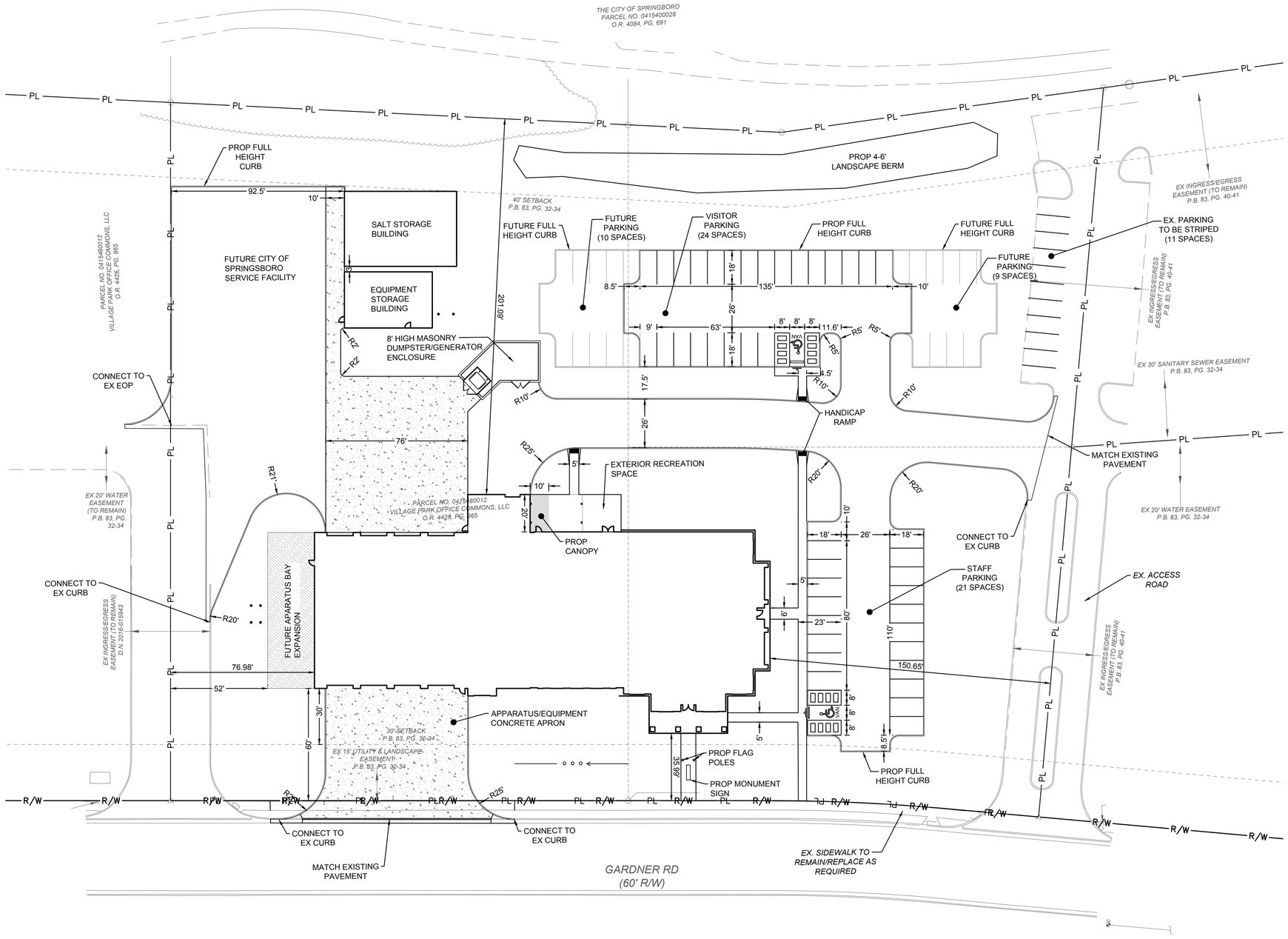

EXISTING LEGEND

- PL — PROPERTY LINE
- R/W — RIGHT-OF-WAY
- PAVEMENT/ SIDEWALK
- PAVEMENT STRIPING
- CURB
- ROAD CENTERLINE
- TREE DRIP LINE
- FENCE
- STREAM
- stm — STORM SEWER
- san — SANITARY SEWER
- w — WATER LINE
- g — GAS LINE
- fo — FIBER OPTIC LINE
- e — ELECTRIC
- ohe — OVERHEAD ELECTRIC
- t — TELECOMMUNICATION
- ctv — CABLE TELEVISION

SITE LEGEND

- PL — PROPERTY LINE
- R/W — RIGHT-OF-WAY
- (X) — PARKING STALL COUNT
- (X) — ADA PARKING STALL COUNT
- STRAIGHT CURB
- CURB AND GUTTER
- LIGHT POLE (BY OTHERS)
- PARKING BLOCK

SITE DATA

ZONING:

PROPOSED USE:	FIRE STATION
SITE ACREAGE:	4.0625 AC
PRE-DEVELOPED PERVIOUS AREA	3.75 AC
POST DEVELOPED PERVIOUS AREA	1.85 AC
ZONING:	PUD-MU
FEMA FLOODPLAIN:	ZONE "X" (39165C0028E)

SITE LAYOUT DATA:

MINIMUM DRIVE AISLE WIDTH:	24'-0"
STANDARD PARKING STALL:	9' X 18'
STAFF PARKING STALL:	10' X 18'
ADA PARKING STALL:	8' X 18'

PARKING DATA:

TOTAL SPACES REQUIRED:	69
TOTAL SPACES PROVIDED:	56
FUTURE SPACES:	19

ACTUAL PEAK REQUIRED SPACES:

ADA SPACES:	2
MAX NUMBER FIRE DEPARTMENT STAFF	18
FD ADMIN STAFF:	10
TRAINING ROOM:	40

KZF DESIGN
Designing Better Futures

AMERICAN STRUCTUREPOINT INC.
2550 Corporate Exchange Dr. Ste 300 | Columbus, Ohio 43231
TEL 614.901.2235 | FAX 614.901.2236
www.structurepoint.com

SCHEMATIC DESIGN FOR
CLEARCREEK FIRE DISTRICT HEADQUATERS
SPRINGBORO, WARREN COUNTY, OHIO
ZONING PLAN

REVISIONS	DATE	SHEET NO.	DESCRIPTION

APPROVAL PENDING NOT FOR CONSTRUCTION
IN SUBMITTING BIDS IN RELIANCE ON THESE PLANS THE CONTRACTOR ASSUMES ALL RISKS OF ADDITIONAL COSTS OF REVISIONS DUE TO REQUIREMENTS OF THE OWNER OR GOVERNMENTAL AUTHORITIES AND MATERIAL REVISIONS IN THE COURSE OF COMPLETING THE FINAL DESIGN.

DATE:	6/23/2023
DRAWN BY:	ADS
CHECKED BY:	DSM
JOB NUMBER:	2022.02228

Z1

PLOT SCALE: 1:1 EDIT DATE: 6/23/23 - 9:54 AM EDITED BY: ASTALEY DRAWING FILE: O:\2022\02228\D. DRAWINGS\CIVIL\CONSTRUCTION DOCUMENTS\CDS\2022.02228 ZP.DWG

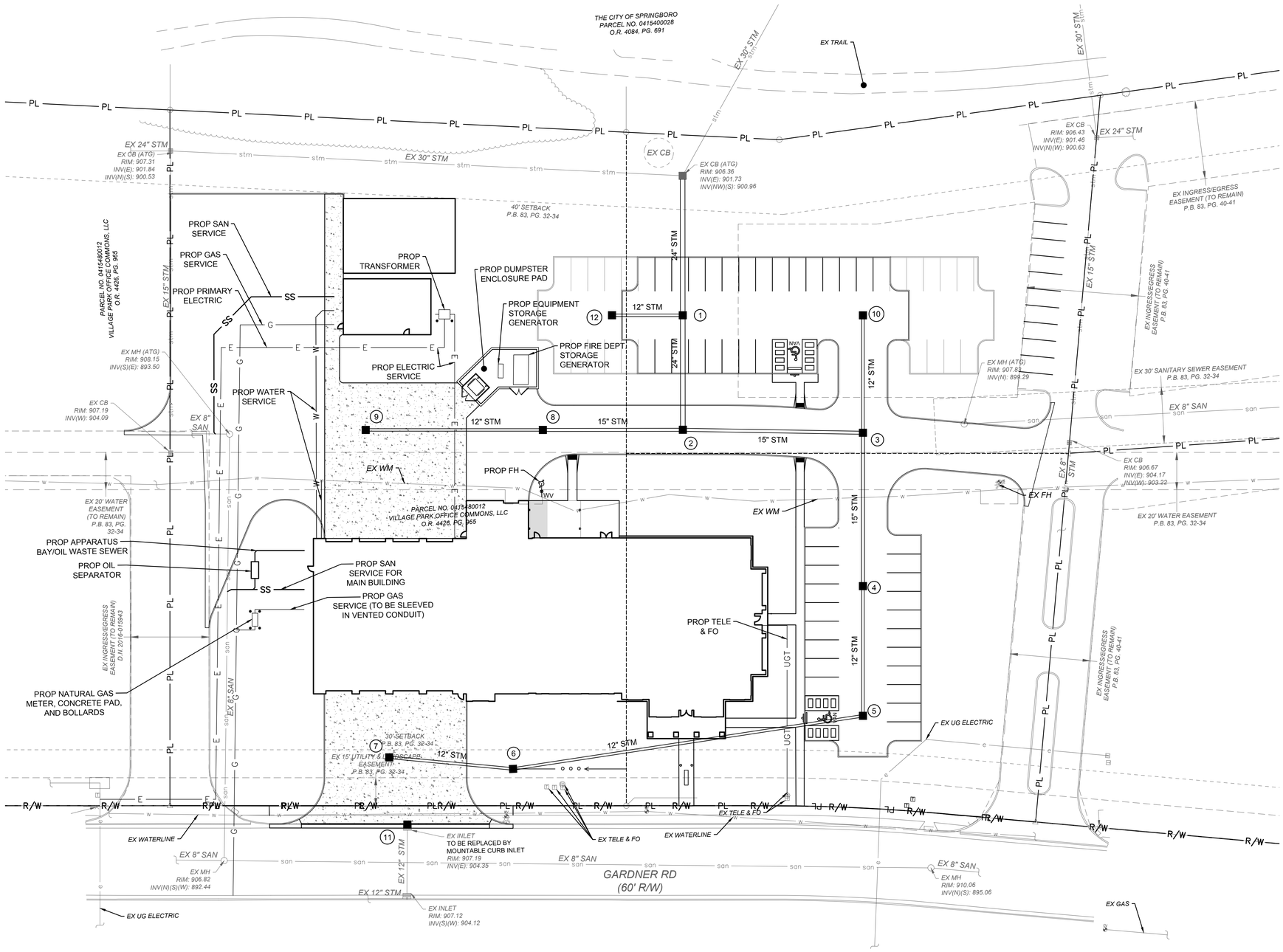

EXISTING LEGEND

- PL — PROPERTY LINE
- R/W — RIGHT-OF-WAY
- PAVEMENT/ SIDEWALK
- PAVEMENT STRIPING
- CURB
- ROAD CENTERLINE
- TREE DRIP LINE
- FENCE
- STREAM
- stm — STORM SEWER
- san — SANITARY SEWER
- w — WATER LINE
- g — GAS LINE
- fo — FIBER OPTIC LINE
- e — ELECTRIC
- ohe — OVERHEAD ELECTRIC
- t — TELECOMMUNICATION
- ctv — CABLE TELEVISION

UTILITY LEGEND

- SS — SANITARY SERVICE
- W — WATER
- E — ELECTRIC
- T — TELECOMMUNICATION
- FO — FIBER-OPTIC
- L — LIGHTING
- STM — STORM SEWER
- RD — ROOF DRAIN
- FIRE HYDRANT
- WV — WATER VALVE
- REDUCER
- FIRE HYDRANT

KZF DESIGN
Designing Better Futures

AMERICAN STRUCTUREPOINT INC.
2550 Corporate Exchange Dr. Ste 300 | Columbus, Ohio 43231
TEL 614.901.2235 | FAX 614.901.2236
www.structurepoint.com

SCHEMATIC DESIGN
FOR
CLEARCREEK FIRE DISTRICT HEADQUATERS
SPRINGBORO, WARREN COUNTY, OHIO
UTILITY PLAN

REVISIONS	DATE	SHEET NO.	DESCRIPTION

APPROVAL PENDING NOT FOR CONSTRUCTION
IN SUBMITTING BIDS IN RELIANCE ON THESE PLANS THE CONTRACTOR ASSUMES ALL RISKS OF ADDITIONAL COSTS OF REVISIONS DUE TO REQUIREMENTS OF THE OWNER OR GOVERNMENTAL AUTHORITIES AND MATERIAL REVISIONS IN THE COURSE OF COMPLETING THE FINAL DESIGN.

DATE:	6/23/2023
DRAWN BY:	ADS
CHECKED BY:	DSM
JOB NUMBER:	2022.02228

C100

PLOT SCALE: 1:1 EDIT DATE: 6/23/23 - 9:55 AM EDITED BY: ASTALEY DRAWING FILE: O:\2022\02228\D. DRAWINGS\CIVIL\CONSTRUCTION DOCUMENTS\CDS\2022.02228 UP.DWG

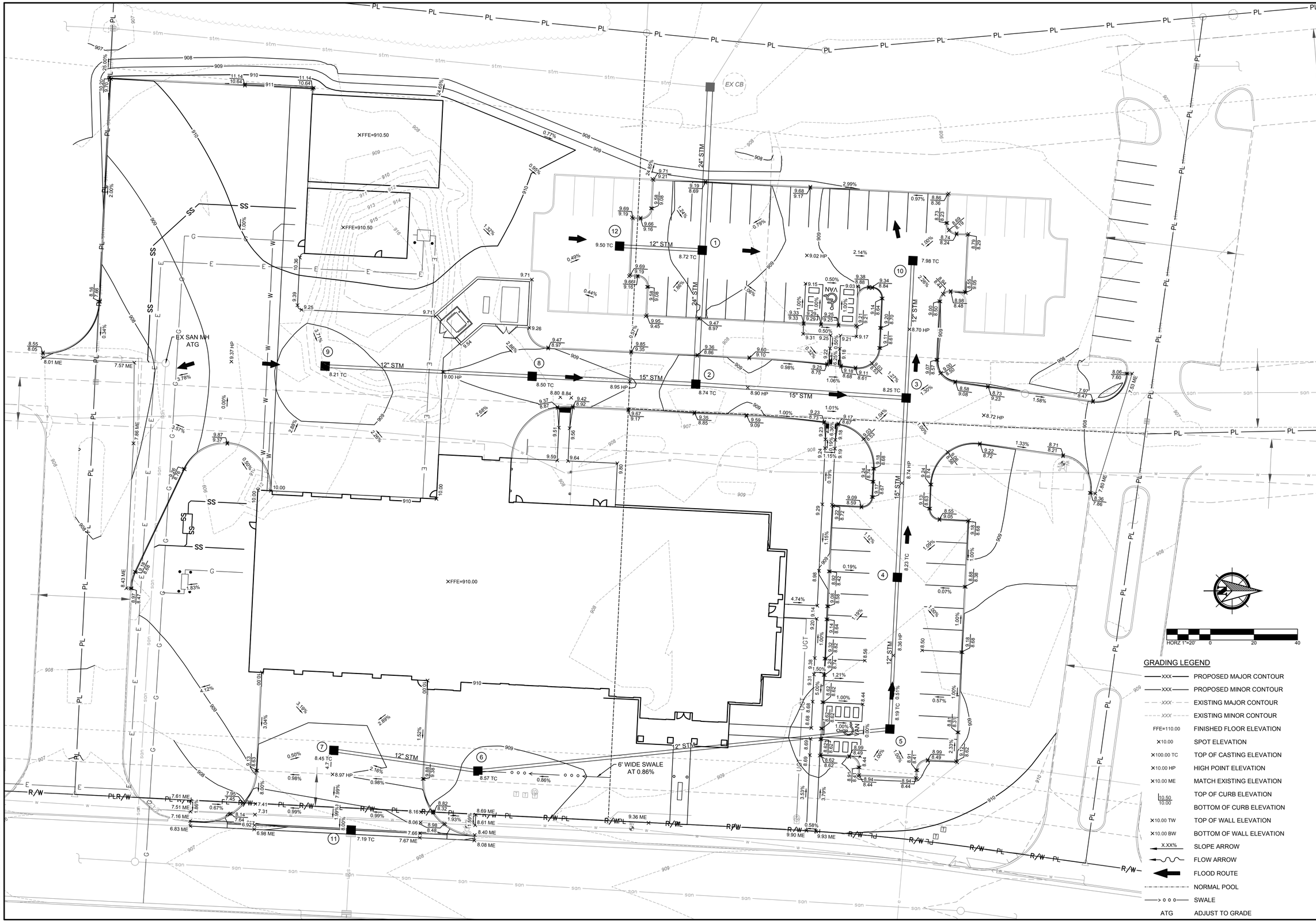

GRADING LEGEND

XXX	PROPOSED MAJOR CONTOUR
XXX	PROPOSED MINOR CONTOUR
XXX	EXISTING MAJOR CONTOUR
XXX	EXISTING MINOR CONTOUR
FFE=110.00	FINISHED FLOOR ELEVATION
×10.00	SPOT ELEVATION
×100.00 TC	TOP OF CASTING ELEVATION
×10.00 HP	HIGH POINT ELEVATION
×10.00 ME	MATCH EXISTING ELEVATION
10.50 / 10.00	TOP OF CURB ELEVATION / BOTTOM OF CURB ELEVATION
×10.00 TW	TOP OF WALL ELEVATION
×10.00 BW	BOTTOM OF WALL ELEVATION
X.XX%	SLOPE ARROW
	FLOW ARROW
	FLOOD ROUTE
	NORMAL POOL
	SWALE
ATG	ADJUST TO GRADE

PLOT SCALE: 1:1 EDIT DATE: 6/23/23 - 9:56 AM EDITED BY: ASTALEY DRAWING FILE: O:\2022\02228\D. DRAWINGS\CIVIL\CONSTRUCTION DOCUMENTS\CDS\2022.02228 GP.DWG

KZF DESIGN
Designing Better Futures

AMERICAN STRUCTUREPOINT INC.
2550 Corporate Exchange Dr. Ste 300 | Columbus, Ohio 43231
TEL 614.901.2235 | FAX 614.901.2236
www.structurepoint.com

SCHEMATIC DESIGN
FOR
CLEARCREEK FIRE DISTRICT HEADQUATERS
SPRINGBORO, WARREN COUNTY, OHIO
GRADING PLAN

REVISIONS	DATE	SHEET NO.	DESCRIPTION

APPROVAL PENDING NOT FOR CONSTRUCTION
IN SUBMITTING BIDS IN RELIANCE ON THESE PLANS THE CONTRACTOR ASSUMES ALL RISKS OF ADDITIONAL COSTS OF REVISIONS DUE TO REQUIREMENTS OF THE OWNER OR GOVERNMENTAL AUTHORITIES AND MATERIAL REVISIONS IN THE COURSE OF COMPLETING THE FINAL DESIGN.

DATE:	6/23/2023
DRAWN BY:	ADS
CHECKED BY:	DSM
JOB NUMBER:	2022.02228

C101

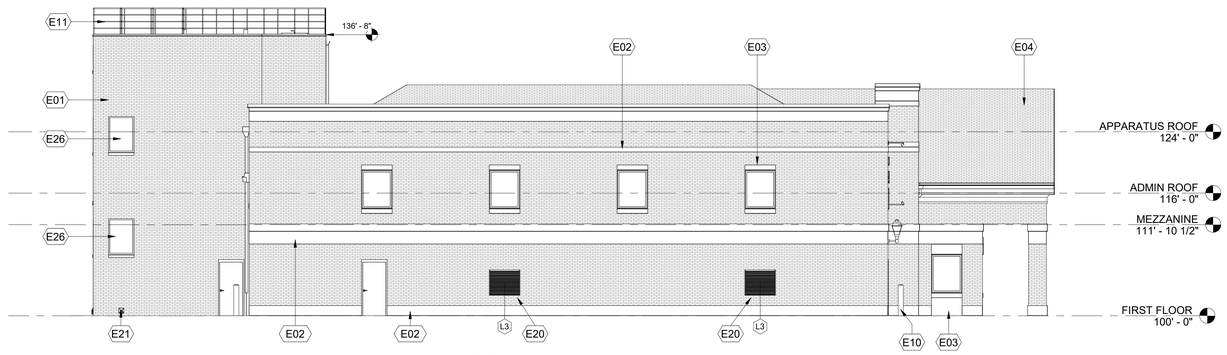

04 A-201 **Elevation - SOUTH**
1/8" = 1'-0"

REFER TO A-204 FOR EXTERIOR MATERIAL SCHEDULE

DRAWING NOTES

E01	VENEER BRICK
E02	CAST STONE BAND
E03	CAST STONE ACCENTS. ALL ACCENTS TO BE COLOR 1 UNLESS INDICATED BY DIAGONAL CROSSHATCH TO BE COLOR 2
E04	ASPHALT SHINGLE ROOF
E05	METAL COPING
E07	METAL GUTTER AND DOWNSPOUT
E10	PAINTED METAL BOLLARD
E11	PAINTED METAL GUARDRAIL
E12	ACCENT LOUVER TRIM
E14	ENGINEERED WOOD TRIM. REFER TO SECTIONS FOR PROFILES.
E15	ENGINEERED WOOD FASCIA
E16	FIBER CEMENT LAP SIDING
E17	FABRICATED BUILDING SIGNAGE
E18	CAST ALUMINUM DIMENSIONAL LETTER SIGNAGE
E19	DECORATIVE LIGHT FIXTURE
E20	CAST STONE COPING
E21	LIGHT DUTY TRAINING ANCHOR
E22	PARAPET PROTECTION PLATE. STAINLESS STEEL BENT DIAMOND DECK WITH LADDER TIE-OFF ANCHOR. REFER TO A-330 DETAILS.
E23	METAL SCUPPER AND DOWNSPOUT
E24	PRE-ENGINEERED METAL CANOPY. POST SUPPORTED.
E25	WALL MOUNTED LIGHT FIXTURE. REFER TO ELECTRICAL DRAWINGS.
E26	TRAINING WINDOW. PAINT TO MATCH ADJACENT BRICK.
E27	LADDER TRAINING SIMULATED WINDOW. PAINT EXPOSED CMU TO MATCH ADJACENT BRICK.
E28	ALUMINUM STOREFRONT

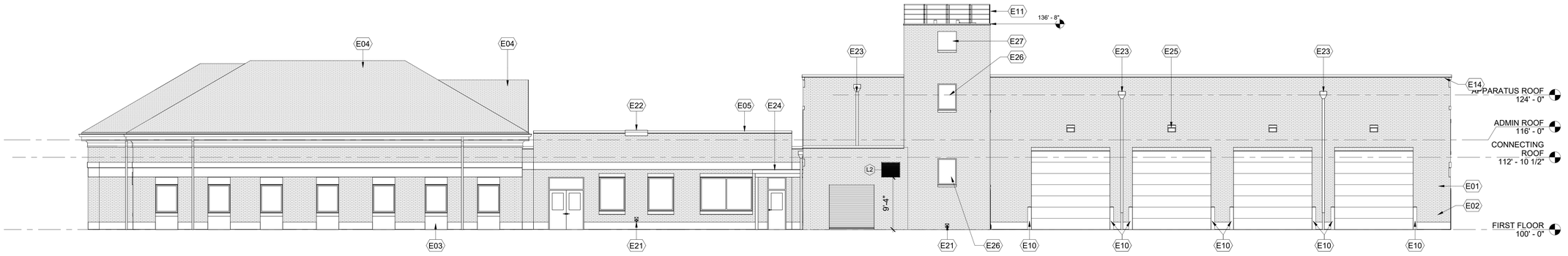

03 A-201 **Elevation - WEST**
1/8" = 1'-0"

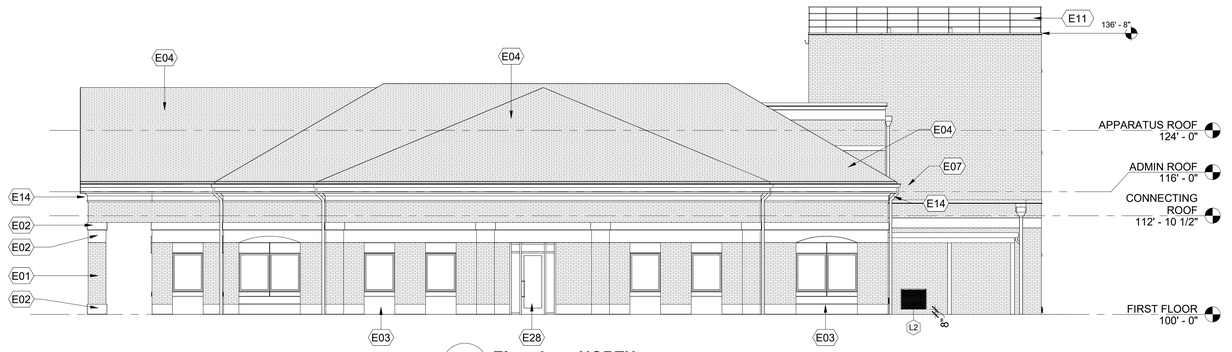

02 A-201 **Elevation - NORTH**
1/8" = 1'-0"

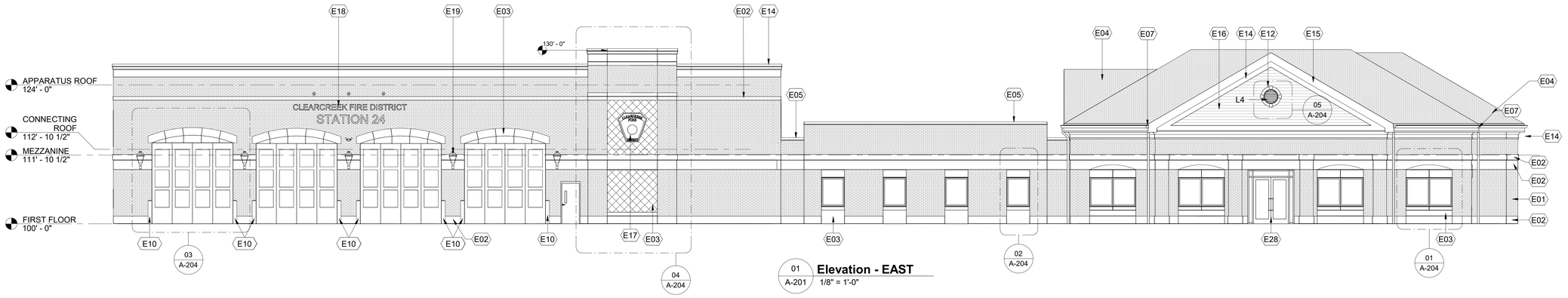

01 A-201 **Elevation - EAST**
1/8" = 1'-0"

0 4' 8' 16'
SCALE: 1/8"=1'-0"

NO. DATE DESCRIPTION

CLEARCREEK FIRE DISTRICT STATION 24

Gardner Road
Springboro, OH 45066

KZF DESIGN
Designing Better Futures

KZF DESIGN INC.
700 Broadway Street
Cincinnati, OH 45202

main 513.621.6211
kzf.com

DESIGNED	COMM. NO.
Designer	6969.01
DRAWN	DATE
Author	MM-DD-YYYY
CHECKED	PROJ. MGR.
Checker	CSENDES

BUILDING ELEVATIONS

DRAWING NUMBER ISSUE

A-201

NOT FOR CONSTRUCTION

2023-06-23 PLANNING REVIEW

REFER TO A-204 FOR EXTERIOR MATERIAL SCHEDULE

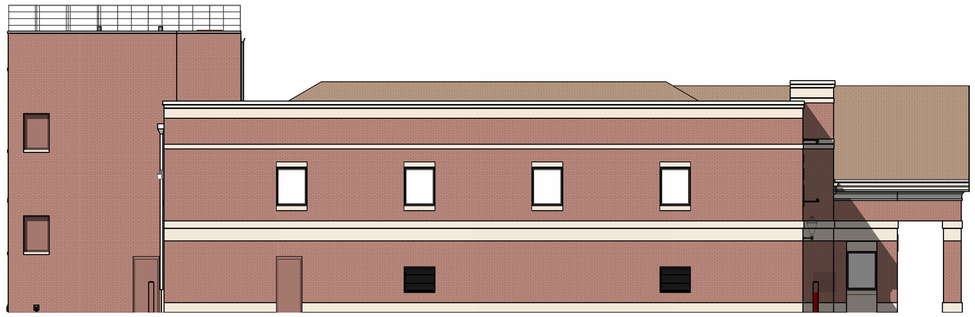

04 A-202 **COLOR Elevation - SOUTH**
1/8" = 1'-0"



03 A-202 **COLOR Elevation - WEST**
1/8" = 1'-0"

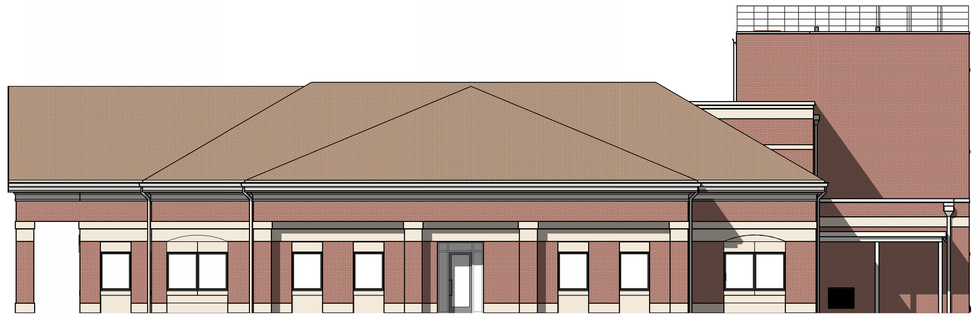

02 A-202 **COLOR Elevation - NORTH**
1/8" = 1'-0"

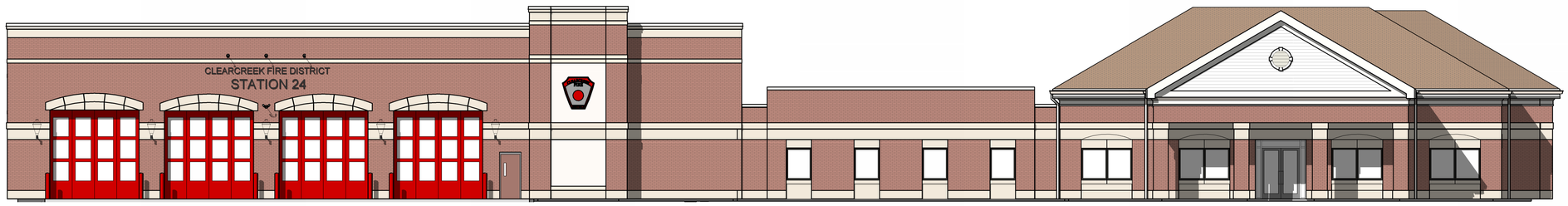

01 A-202 **COLOR Elevation - EAST**
1/8" = 1'-0"

0 4' 8' 16'
SCALE: 1/8"=1'-0"

NO. DATE DESCRIPTION

CLEARCREEK FIRE DISTRICT STATION 24
Gardner Road
Springboro, OH 45066

KZF DESIGN
Designing Better Futures

KZF DESIGN INC.
700 Broadway Street
Cincinnati, OH 45202

main 513.621.6211
kzf.com

DESIGNED Designer | COMM. NO. 6969.01
DRAWN Author | DATE 12/08/22
CHECKED Checker | PROJ. MGR. CSENDES

BUILDING ELEVATIONS - COLOR

DRAWING NUMBER ISSUE
A-202

NOT FOR CONSTRUCTION

2023-06-23 PLANNING REVIEW

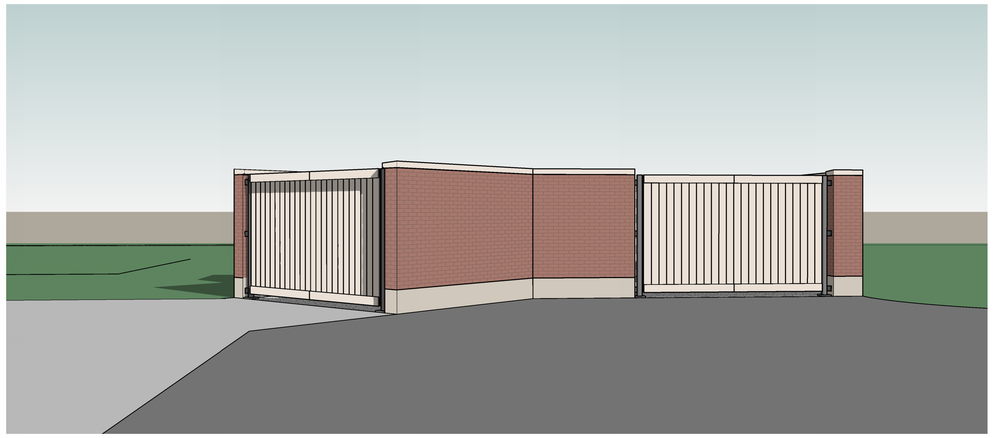

06 A-203 **3D View - Dumpster and Generator Enclosure**



03 A-203 **3D View - Apparatus Bay entry drive**

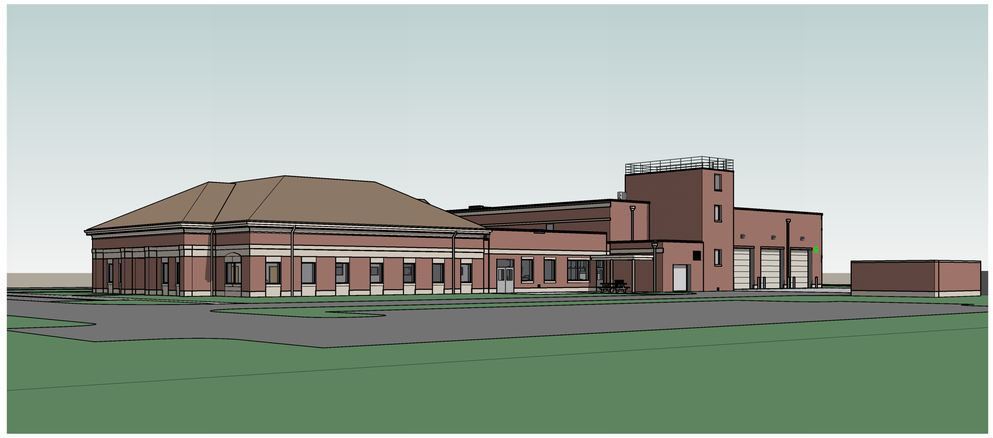

05 A-203 **3D View - from park walking path**



02 A-203 **3D View - South Entrance Drive**



04 A-203 **3D View - Gardner Road**

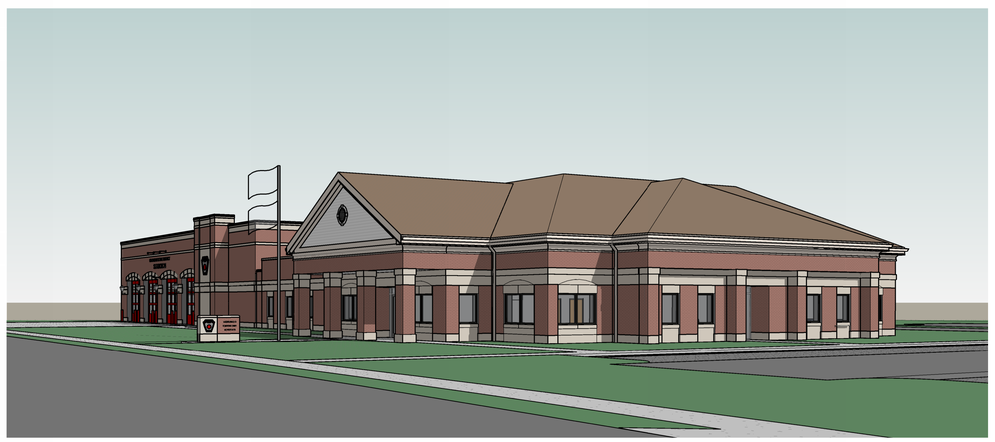

01 A-203 **3D View - North Entrance Drive**

NO.	DATE	DESCRIPTION

CLEARCREEK FIRE DISTRICT STATION 24

Gardner Road
Springboro, OH 45066

KZF DESIGN
Designing Better Futures

KZF DESIGN INC.
700 Broadway Street
Cincinnati, OH 45202

main 513.621.6211
kzf.com

DESIGNED	COMM. NO.
Designer	6969.01
DRAWN	DATE
Author	11/22/22
CHECKED	PROJ. MGR.
Checker	CSENDES

EXTERIOR VIEWS

DRAWING NUMBER ISSUE

A-203

NOT FOR CONSTRUCTION

2023-06-23 PLANNING REVIEW

APPLICATION—PLANNED UNIT DEVELOPMENTS
CITY OF SPRINGBORO PLANNING COMMISSION

☒ REZONING/GENERAL PLAN ☐ FINAL DEVELOPMENT PLAN ☐ RECORD PLAN ☐ VARIANCE

The undersigned requests the approval identified above. Approvals subject to expiration provided for in Chapter 1266 of Planning & Zoning Code. For all approvals under this application, it is understood that it shall only authorize the approval described in this application, subject to any conditions or safeguards required by the Planning Commission, and/or City Council.

❑ Owner
❑ Agent
❑ Lessee
☒ Signed Purchase Contract

APPLICANT NAME: M/I Homes of Cincinnati, LLC / Justin Lanham

Address: 9349 Waterstone Boulevard, Suite 100

Cincinnati, OH 45249

Telephone No. (513) 833-2206

Fax No. ( ) N/A

Email Address jlanham@mihomes.com

PROPERTY OWNER NAME (IF OTHER): Peter S. Morris, Successor Trustee

Address: 1525 S. Main Street

Springboro, OH 45066

Telephone No. (407) 786-5125

Property Address or General Location: 1525 S. Main Street Springboro, OH 45066

Parcel Number(s): 08182000131 & 08182000132 Acreage: 35.62

PUD Category: ☒ Residential ☐ Retail ☐ Office ☐ Manufacturing ☐ Mixed Use

If Mixed Use, Acreage in Each Category: N/A

For Residential Proposed Density 2.67 Number of Residential Units 95

Proposed Use: 95 For sale detached single-family homes with a typical lot size of 62'x135'

The applicant or representative who is authorized to speak on behalf of the request must also be present at all meetings.

M. R. [illegible] 6/19/2023

(Signature of Applicant and/or Agent) (Date)

Justin Lanham

Printed Name

Legal Description of the Property

Parcel No. 1 P4. 08-18-200-013 SC

Situate in the Township of Clearcreek, County of Warren and State of Ohio, in Section 18, Town 3, Range 4, MRs., and being a part of the 110 acre tract as described in Deed Book 165, Page 107 of the Deed Records of said County, and being more particularly bounded and described as follows:

Beginning at a point in the east line of Section 18, in the center of State Road No. 741, and in the Grantors east line, bearing North 0 degrees 45 minutes West 478.3 feet distant from the southeast corner of the Grantors 110 acre tract (witness an iron pin bearing South 89 degrees 15 minutes West 30 feet distant); Thence with a new division line and parallel to the Grantors south line South 89 degrees 15 minutes West for a distance of 1742.4 feet to an iron pin; Thence parallel with the Grantors east line North 0 degrees 45 minutes West for a distance of 500.0 feet to an iron pin; Thence North 89 degrees 15 minutes East for a distance of 1742.4 feet to a point in the east line of Section 18 (witness an iron pin bearing south 89 degrees 15 minutes West 30 feet distant); Thence with the east line of Section 18, with the center of State Road No. 741 and with Grantors east line south 0 degrees 45 minutes East for a distance of 500.0 feet to the place of beginning, containing 20.0 Acres, more or less, subject to all legal highways, easements and conditions of record. Volume 359, Page 391 of the Warren County, Ohio Deed Records.

Parcel No. 2 P4. 08-18-200-013 SC

Situate in the Township of Clearcreek, County of Warren and State of Ohio, in Section 18, Town 3, Range 4 MRs. and being a part of the 100 acre tract as described in Deed Book 165, Page 107 of the Deed Records of said County and being more particularly bounded and described as follows: Beginning at a point in the east line of Section 18, in the center of State Road No. 741, in the Grantor's east line and in the northeast corner of the 20 acre tract as described in Deed Book 359 page 391 of the deed records of said county, bearing North 0 degrees 45 minutes West 978.3 feet distant from the southeast corner of the Grantor's 110.0 acre tract, (witness an iron pin bearing South 89 degrees 15 minutes West for a distance of 1742.4 feet to an iron pin in the northwest corner of said 20.0 acre tract, (witness an iron pin bearing South 89 degrees 15 minutes West 276.3 feet distant); Thence with the west line of the 20.0 acre tract South 0 degrees 45 minutes East for a distance of 500 feet to an iron pin in the southwest corner of said 20.0 acre tract; Thence with a new division lien South 89 degrees 15 minutes West for a distance of 450.6 feet to an iron pin in the Grantor's west line; Thence with the Grantor's west line North 18 degrees 28 minutes East for a distance of 529.50 feet to an iron pin; Thence continuing with the Grantor's west line North 18 degrees 36 minutes 49 seconds East for a distance of 288.54 feet to an iron pin; Thence South 89 degrees 34 minutes 43 seconds East for a distance of 1924.85 feet to a point in the center of State Road No. 741 and in the east line of Section 18, (witness an iron pin bearing North 89 degrees 34 minutes 43 seconds West 32.9 feet distant); Thence with the Grantor's est line and with the east line of Section 18 and with the center of State Road No. 741, South 0 degrees 45 minutes East for a distance of 232.90 feet to the place of beginning, containing 15.62 Acres, more or less, subject to all legal highways, easements and conditions of record.

Volume 386, Page 58 of the Warren County, Ohio Deed Records.

Known as 1525 S. Main Street, Springboro, Ohio.

Prior Instrument Reference: Volume 130 Page 552 of the Warren County, Ohio Deed Records.

M/I HOMES
Welcome to Better

Cincinnati Division
9349 Waterstone Boulevard, Suite 100
Cincinnati, OH 45249
513.248.5400 **OFFICE**

June 23, 2023

Daniel J. Boron, AICP
Planner, City of Springboro
320 West Central Avenue
Springboro, Ohio 45066

Subject: Morris Property – Application for Amendment of Zoning Map & General Plan
Enclosed: Proposed House Elevations and Floorplans (10 Pages)

Dear Mr. Boron,

M/I Homes is pleased to provide an Application for an Amendment of Zoning Map & General Plan for the 35.62 acre Morris property located at 1525 S Main Street Springboro, OH 45066. The proposed General Plan shows (95) single-family detached lots with a typical lot dimension of 62'x135' and 25' front and rear setbacks as well as 5' side setbacks on each side (10' total). The streets are in a 50' public right-of-way that will include 5' sidewalk on both sides of the internal streets.

The proposed plan has 10.6 acres of active and passive open space which is 30% of the total acreage. The central green space is more than 3 acres. The unique area will feature the existing pond, walking paths, and a seating shelter. Future homeowners can enjoy this space for neighborhood gatherings, for active play area, or to look out upon and enjoy from their front porch. The open space will be owned and maintained by a Homeowners Association that shall govern the community through the Covenants, Conditions, & Restrictions.

If the Amendment of Zoning Map & General Plan is approved, we plan to market the community as "Whispering Pines" and break ground in the Spring of 2024 with the goal of having a model home open in the Fall of 2024. We will offer for sale detached ranch and two-story homes targeting empty-nester and family buyers. The enclosed house plans include a variety of elevations and colors with square footage ranging from 1,544sf to more than 3,000sf. Buildout is expected to take 3-5 years depending on market conditions. We will submit final house plans at the Final Development Plan stage.

The City of Springboro Master Plan adopted in February 2022 locates the property within Policy Area 16 which is described as having the following existing and preferred future characteristics:

1. Low-to moderate-density detached residential (Pg. 79). The Master Plan looked at the following housing densities (Pg. 23); 1.) single-family at 4 du/ac, 2.) cluster housing at 8 du/ac, 3.) townhomes at 15 du/ac, and 4.) apartments/flats at 25 du/ac.

M/I HOMES
Welcome to Better

Cincinnati Division
9349 Waterstone Boulevard, Suite 100
Cincinnati, OH 45249
513.248.5400 **OFFICE**

- The proposed plan density is 2.67 detached du/ac which appears to be consistent with the "low-to moderate density" prescribed for Policy Area 16.

2. Extensive active and passive open space areas (Pg. 79).
   - The proposed plan includes 30% active and passive open space including walking paths, seating shelter, naturally wooded areas, and the existing pond.

3. Policy area 16 is characterized by large lot single family residential uses (Pg. 79).
   - While the area does have a mixture of large lots including multiple single-family lots along S.R. 741 that could be redeveloped in the future, there are pockets of residential lots similar in size to the proposed plan most notably across at Heatherwoode Blvd.

4. Encourage safe school access for nearby residents through the establishment of sidewalks and/or walking trails (Pg. 80).
   - The proposed plan includes sidewalk on both sides of the internal streets and a direct sidewalk connection to the school campus to the south.

5. Promote and maintain the Heatherwoode Golf Course as a valuable local and regional amenity (Pg. 80).
   - The proposed plan will not negatively impact the golf course but should be a source of new customers.

Based on these characteristics, we believe the proposed plan "emphasizes residential uses that conform to the existing character of the neighborhood" as is recommended by the 2022 Master Plan (Pg. 80). We look forward to working with the City of Springboro and creating a community that current and future residents can be proud of. Please contact me should you have any questions or need additional information.

Respectfully,

Justin Lanham
M/I Homes of Cincinnati, LLC
9349 Waterstone Boulevard, Suite 100
Cincinnati, OH 45249
(513) 551-3954
jlanham@mihomes.com



VICINITY MAP 1"=1000'



ZONING MAP: 1"=1000'

R-1	(R-1) ESTATE-TYPE RESIDENTIAL DISTRICT
R-2	(R-2) LOW DENSITY RESIDENTIAL DISTRICT (SINGLE FAMILY)
R-3	(R-3) MEDIUM DENSITY RESIDENTIAL DISTRICT (SINGLE & MULTI-FAMILY)
HBD	(HBD) HIGHWAY BUSINESS DISTRICT
LBD	(LBD) LOCAL BUSINESS DISTRICT
CBD	(CBD) CENTRAL BUSINESS DISTRICT
UVD	(UVD) URBAN VILLAGE DISTRICT
M-1	(M-1) LIGHT MANUFACTURING DISTRICT
M-2	(M-2) HEAVY MANUFACTURING DISTRICT
ED	(ED) EMPLOYMENT CENTER DISTRICT
PUD	(PUD) PLANNED UNIT DEVELOPMENT DISTRICT
PUD-MU	(PUD-MU) PLANNED UNIT DEVELOPMENT-MIXED USE
PUD-O	(PUD-O) PLANNED UNIT DEVELOPMENT-OFFICE
PUD-B	(PUD-B) PLANNED UNIT DEVELOPMENT-BUSINESS
PUD-R	(PUD-R) PLANNED UNIT DEVELOPMENT-RESIDENTIAL
O-R	(O-R) OFFICE-RESIDENTIAL DISTRICT
O	(O) OFFICE PARK DISTRICT
ADD-1	(ADD-1) AUSTIN DEVELOPMENT DISTRICT 1
ADD-2	(ADD-2) AUSTIN DEVELOPMENT DISTRICT 2

1. KASH TERRY ARTHUR
6614 WEIDNER RD
SPRINGBORO OH 45066
2. SAGE LAND DEVELOPMENT LLC
3601 RIGBY RD
STE 300
MIAMISBURG OH 45342
3. CALMES SANDRA L
1405 S MAIN ST
SPRINGBORO OH 45066
4. PENWELL PHILLIP L & BARBARA J
23 DUNNINGTON CT
SPRINGBORO OH 45066
5. BRUNNER E MELVIN & SUSAN
29 DUNNINGTON CT
SPRINGBORO OH 45066
6. MORRIS PETER S TRUSTEE
1525 S MAIN ST
SPRINGBORO OH 45066
7. MORRIS PETER S TRUSTEE
1525 S MAIN ST
SPRINGBORO OH 45066
8. FERGUSON REBECCA A
6584 WEIDNER RD
SPRINGBORO OH 45066
9. SIR EDWARDS GLEN OWNERS ASSOCIATION
44 DUNNINGTON CT
SPRINGBORO OH 45066
10. CHRISTOPHER ANASTASIA
17 DUNNINGTON CT
SPRINGBORO OH 45066
11. MCLAIN DOUGLAS & CHRISTINE
11 DUNNINGTON CT
SPRINGBORO OH 45066
12. ANDERSON JANA S
5 N DUNNINGTON CT
SPRINGBORO OH 45066
13. GOLLIHUGH CURTIS R & LOIS J
4 DUNNINGTON CT
SPRINGBORO OH 45066
14. MUNTZ GARY W & MARY L
10 GLENCOE CT
SPRINGBORO OH 45066
15. BURCH KEVIN W
30 GLENCOE CT
SPRINGBORO OH 45066
16. BURNS PATRICK & PAMELA
5 GLENCOE CT
SPRINGBORO OH 45066
17. VALENTINO NICHOLAS V
15 GLENCOE CT
SPRINGBORO OH 45066
18. ASHBY HULAN C
25 GLENCOE CT
SPRINGBORO OH 45066
19. RUTLEDGE LARRY R JR
35 GLENCOE CT
SPRINGBORO OH 45066
20. HAGAMAN HENRY R & KAREN S
45 GLENCOE CT
SPRINGBORO OH 45066
21. MARTIN LORI A & DUDAS ELMER
55 GLENCOE CT
SPRINGBORO OH 45066
22. SKELDING RICHARD C & ROBIN K
65 N GLENCOE CT
SPRINGBORO OH 45066
23. CARNES RALPH M & MELANIE A
5707 WEIDNER RD
SPRINGBORO OH 45066
24. CARNES MICHAEL A
1520 S MAIN ST
SPRINGBORO OH 45066
25. CRANE ROBERT M & REGINA
138 TIMBERSIDE CT
SPRINGBORO OH 45066
26. DO DAKLAK CAO & DAKBLA TRAN
1550 S MAIN ST
SPRINGBORO OH 45066
27. CITY OF SPRINGBORO
320 W CENTRAL AVE
SPRINGBORO OH 45066
28. SPRINGBORO COMMUNITY CITY SCHOOLS
1685 S MAIN ST
SPRINGBORO OH 45066

SCALE IN FEET
0 100 200 400

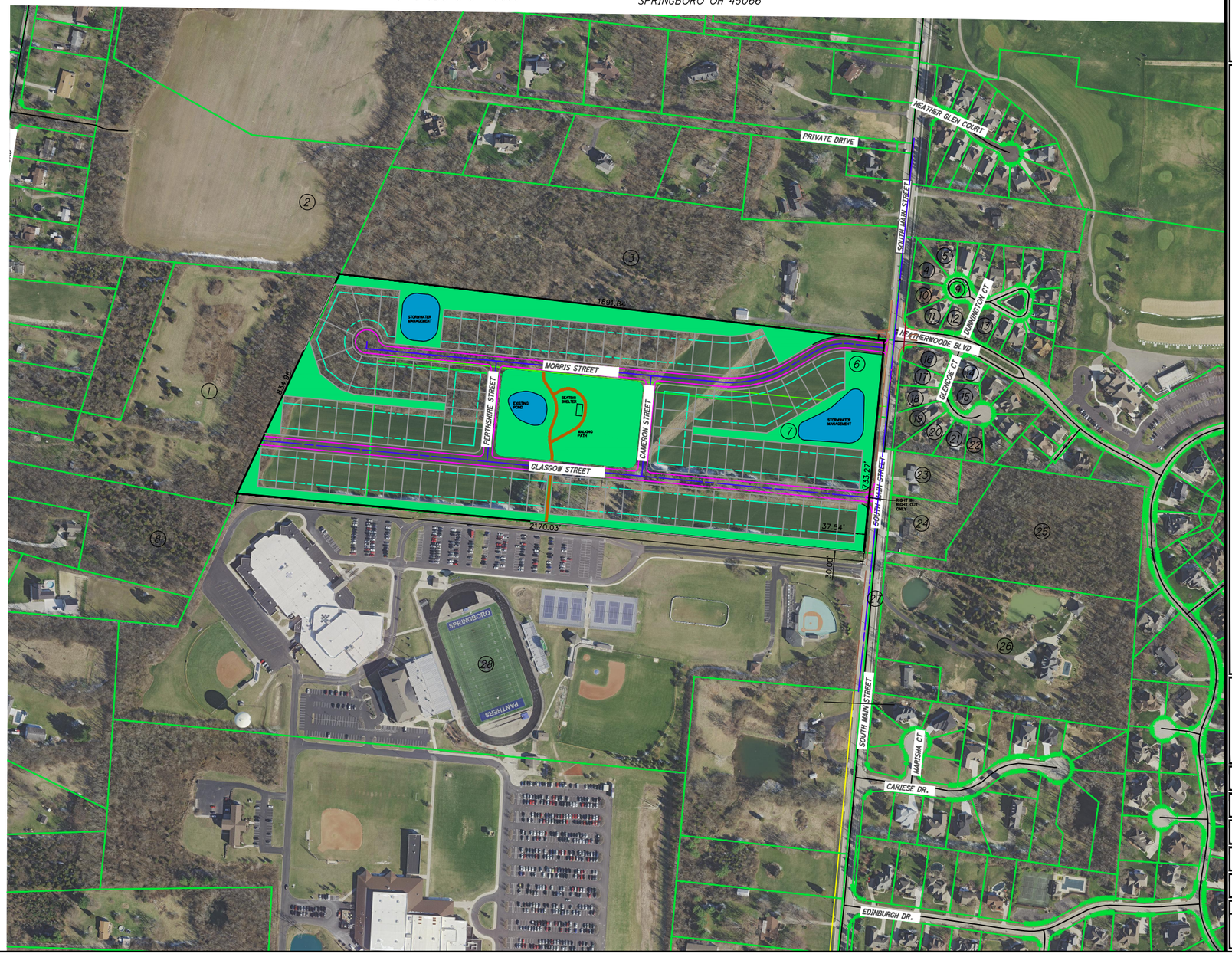

ChoiceOne Engineering
SIDNEY, OHIO 937.497.0200
LOVELAND, OHIO 513.239.8554
www.CHOICEONEENGINEERING.com

WHISPERING PINES
CITY OF SPRINGBORO
SCHEMATIC PLAN

REVISIONS:

FILE NAME
VICINITY

DRAWN BY
JBP

CHECKED BY
JSP

PROJECT No.
WARSPR2303

DATE
06-19-2023

SHEET NUMBER
1 OF 4

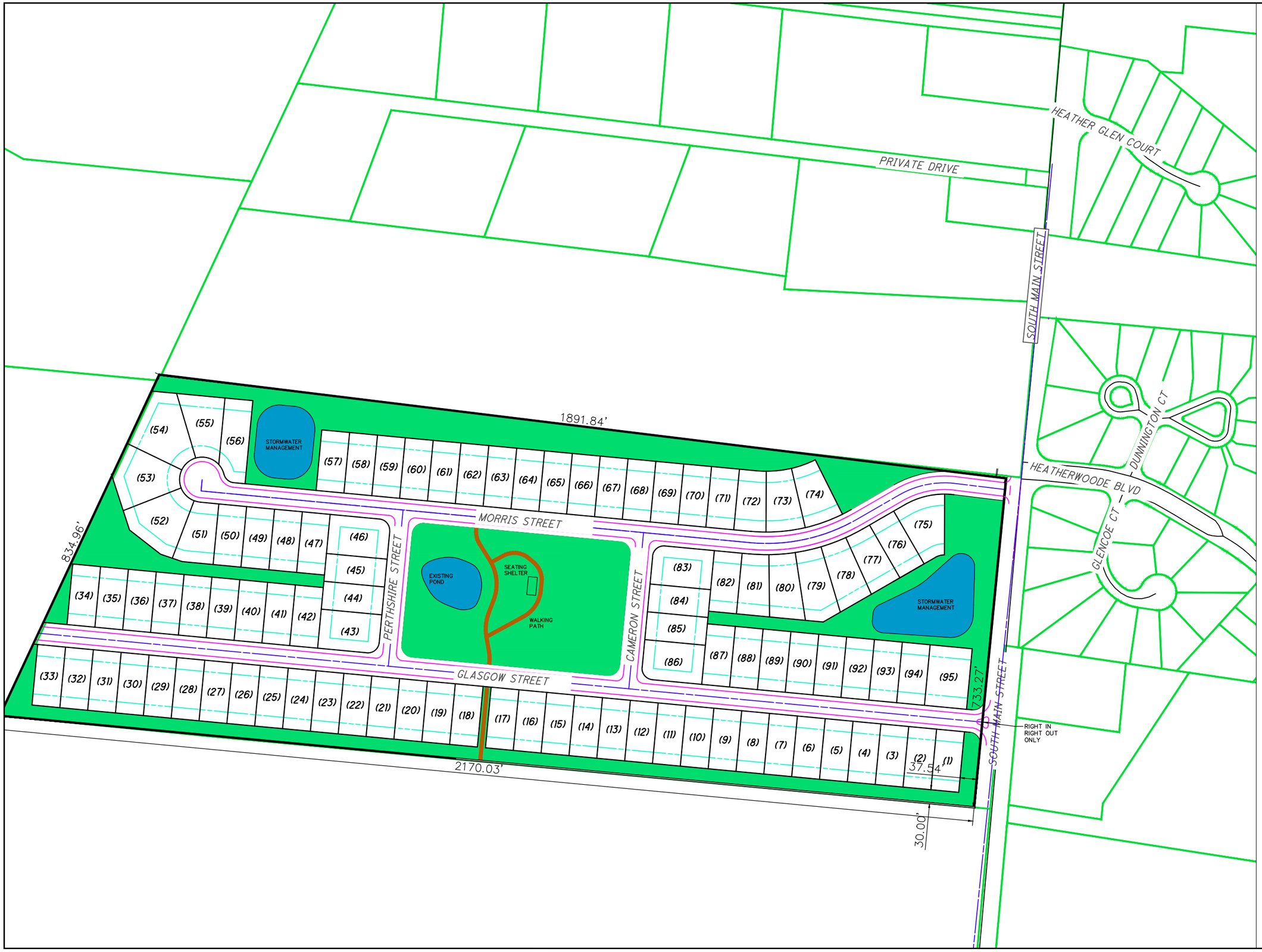

MIN. 62'x135'

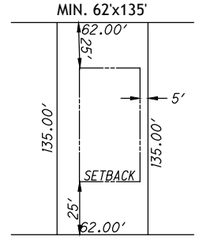

TYPICAL LOT
8,370 S.F.
AVERAGE LOT
9,000 S.F.

PROPOSED STREET RIGHTS OF WAY TO BE 50' IN WIDTH.
INTERNAL STREETS TO BE 29' BACK TO BACK CURB WITH 5' SIDEWALKS.

SITE: 35.62 Ac.

SUMMARY TABLE:

PROPOSED USE: SINGLE FAMILY RESIDENCE
NUMBER OF DWELL UNITS: 95

NET DENSITY OF RESIDENTIAL USES:
95 UNITS / 35.62 Ac.
= 2.67 UNITS / ACRE

EXISTING ZONING: R-1 ZONING

PROPOSED ZONING: PUD-R ZONING

OPEN SPACE: 10.60 Ac./ 30%

95 LOTS 62'x135'

FRONT SETBACK = 25'
REAR SETBACK= 25
SIDE SETBACK= 5', 10' TOTAL

EXISTING CONTOURS: CONTOURS SHOWN AT 1' INTERVALS AND TAKEN FROM CURRENT WARREN COUNTY GIS MAPPING.

OPEN SPACE MAINTAINED BY HOA

PROPOSED WALKING PATH

SCALE IN FEET
0 50 100 200

ChoiceOne Engineering
SIDNEY, OHIO 937.497.0200
LOVELAND, OHIO 513.239.8554
www.CHOICEONEENGINEERING.com

WHISPERING PINES
CITY OF SPRINGBORO
GENERAL PLAN

REVISIONS:

FILE NAME
PHASE
DRAWN BY
JBP
CHECKED BY
JSP
PROJECT #
WARSPR2303
DATE
06-19-2023
SHEET NUMBER
2 OF 4



MIN. 62'x135'

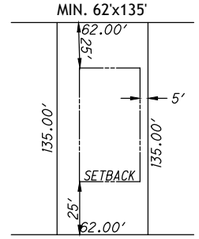

TYPICAL LOT

8,370 S.F.

AVERAGE LOT

9,000 S.F.

PROPOSED STREET RIGHTS OF WAY TO BE 50' IN WIDTH.
INTERNAL STREETS TO BE 29' BACK TO BACK CURB WITH 5' SIDEWALKS.

SITE: 35.62 Ac.

SUMMARY TABLE:

PROPOSED USE: SINGLE FAMILY RESIDENCE
NUMBER OF DWELL UNITS: 95

NET DENSITY OF RESIDENTIAL USES:
95 UNITS / 35.62 Ac.
= 2.67 UNITS / ACRE

EXISTING ZONING: R-1 ZONING

PROPOSED ZONING: PUD-R ZONING

OPEN SPACE: 10.60 Ac./ 30%

95 LOTS 62'x135'

FRONT SETBACK = 25'
REAR SETBACK= 25'
SIDE SETBACK= 5', 10' TOTAL

OPEN SPACE MAINTAINED BY HOA

PROPOSED WALKING PATH

SCALE IN FEET
0 25 50 100

ChoiceOne Engineering
SIDNEY, OHIO 937.497.0200
LOVELAND, OHIO 513.239.8554
www.CHOICEONEENGINEERING.com

WHISPERING PINES
CITY OF SPRINGBORO
GENERAL PLAN

REVISIONS:

SCALE: 1" = 50 SCALE-1
DRAWN BY: JBP
CHECKED BY: JSP
PROJECT NO.: WARSPR2303
DATE: 06-19-2023
SHEET NUMBER: 3 OF 4



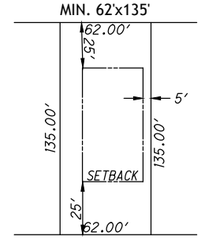

TYPICAL LOT

8,370 S.F.

AVERAGE LOT

9,000 S.F.

PROPOSED STREET RIGHTS OF WAY TO BE 50' IN WIDTH.
INTERNAL STREETS TO BE 29' BACK TO BACK CURB WITH 5' SIDEWALKS.

SITE: 35.62 Ac.

SUMMARY TABLE:

PROPOSED USE: SINGLE FAMILY RESIDENCE
NUMBER OF DWELL UNITS: 95

NET DENSITY OF RESIDENTIAL USES:
95 UNITS / 35.62 Ac.
= 2.67 UNITS / ACRE

EXISTING ZONING: R-1 ZONING

PROPOSED ZONING: PUD-R ZONING

OPEN SPACE: 10.60 Ac./ 30%

95 LOTS 62'x135'

FRONT SETBACK = 25'
REAR SETBACK= 25'
SIDE SETBACK= 5', 10' TOTAL

OPEN SPACE MAINTAINED BY HOA

PROPOSED WALKING PATH

SCALE IN FEET
0 25 50 100

ChoiceOne Engineering

SIDNEY, OHIO 937.497.0200
LOVELAND, OHIO 513.239.8554
WWW.CHOICEONEENGINEERING.COM

WHISPERING PINES
CITY OF SPRINGBORO
GENERAL PLAN

REVISIONS:

FILE NAME: 50 SCALE-2
DRAWN BY: JBP
CHECKED BY: JSP
PROJECT NO: WARSPR2303
DATE: 06-19-2023
SHEET NUMBER: 4 OF 4

M/I HOMES
Welcome to Better

Cincinnati Division
9349 Waterstone Boulevard, Suite 100
Cincinnati, OH 45249
513.248.5400 **OFFICE**

June 30, 2023

Daniel J. Boron, AICP
Planner, City of Springboro
320 West Central Avenue
Springboro, Ohio 45066

Subject: Morris Property – Summary of Development Densities
Enclosed: Adjacent Density Exhibit (1 Page)

Dear Mr. Boron,

As part of the subject application for an Amendment of Zoning Map & General Plan, the City has requested we provide a summary of development densities of existing residential areas in the vicinity of the property. The City provided a density calculation for Heatherwoode of 2.09 du/ac and Farms of Heatherwoode at 1.74 du/ac. In addition, there are approximately 60 acres within 300' of the property that contain 6 single-family residences (a density of .1 du/ac), most of which have the potential to develop in the future.

The development nodes along S.R. 741 have individual densities of 3.5 du/ac and 3.65 du/ac respectively, while backing to Hole #10 of Heatherwoode Golf Club. The proposed plan for the Morris property has a density of 2.67 du/ac, fronts S.R. 741, backs to the Springboro Junior School Campus, and is bordered to the north and west by parcels that have the potential to develop in the future. Exhibit A shows the proximity of these nodes to the Morris property and surrounding uses.

The proposed density for the Morris property appears consistent with the existing housing in the vicinity of the property. Please contact me should you have any questions or need additional information.

Respectfully,

Justin Lanham
M/I Homes of Cincinnati, LLC
9349 Waterstone Boulevard, Suite 100
Cincinnati, OH 45249
(513) 551-3954
jlanham@mihomes.com

Adjacent Density

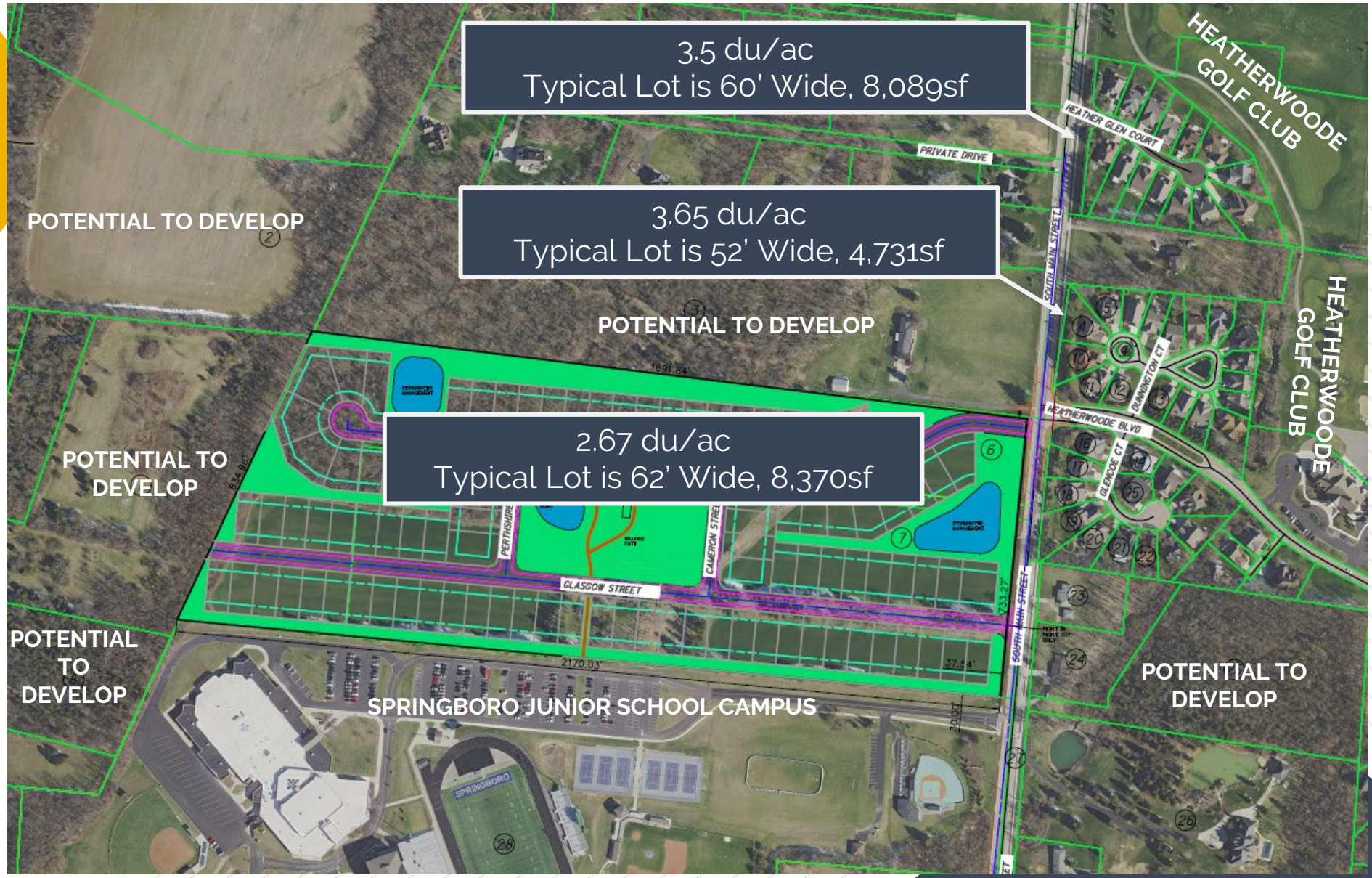

SPRINGBORO

July 5, 2023

Dear Property Owner,

This letters is being sent as a courtesy to residents living adjacent to property located at 1525 South Main Street (SR 741) that is proposed to be rezoned as a residential subdivision under a proposal submitted by M/I Homes of Cincinnati. The Springboro Planning Commission will hold a meeting on Wednesday, July 12, 2023 beginning at 6:00 p.m. in Council Chambers in the Springboro City Building, 320 West Central Avenue, to review on a preliminary basis the rezoning request. See the enclosed vicinity map for the relative location of the property.

The property subject to the rezoning is approximately 35.62 acres in area, as is used as a farm, with frontage on South Main Street. The applicants are requesting to rezone the property from the current R-1, Estate-Type Residential District, to PUD-R, Planned Unit Development-Residential, a zoning district that allows the development of two units per acre on lots 9,000 square feet or larger. The rezoning would accommodate the development of 95 single-family residential units on the property, a development density of 2.67 dwelling units per acre. M/I Homes proposes two access points to the subdivision from South Main Street as well as walking trails internal to the site. A total of 10.6 acres of open space, or 30% of the site acreage, is proposed. PUDs require a minimum of 25% open space. The R-1 District has no open space requirement.

The subdivision proposed by M/I Homes is being reviewed under the Planning and Zoning Code's PUD ordinance. The proposal is currently at stage one of the PUD review process, rezoning and general plan approval with approval by Planning Commission and City Council required. The second stage, final development plan review and approval by Planning Commission, provides more detail on the subdivision's (or a portion of it if developed in sections) plans including street design, utilities, and more. The final stage, record plan review and approval by Planning Commission and City Council, allows for the creation of lots, the dedication of right-of-way and common areas.

Planning Commission meetings are public meetings where applications for approval are reviewed by members of Planning Commission, following the consideration of City staff technical comments, and comments offered by the public. No vote on the M/I Homes rezoning request will be taken on July 12th. The Planning Commission will determine at the conclusion of the July 12th review if formal review and approval may take place at a subsequent meeting, as soon as August 9th, or if additional preliminary discussion is necessary.

If you wish to address the Planning Commission regarding the proposed plan you may do so in person at the July 12th Planning Commission meeting. If you cannot attend the meeting but would like to comment on the proposal, you may submit your comments in writing along with

City of Springboro
320 West Central Avenue
Springboro, Ohio 45066
Phone 937 748 4343
Fax 937 748 0815
www.ci.springboro.oh.us

your name and address to the attention of September Bee, Planning Commission Secretary, by mail to 320 West Central Avenue, Springboro, Ohio 45066; by fax to (937) 748-0815; or by e-mail to september.bee@cityofspringboro.com. All comments received by 4:00 p.m. on July 12th will be forwarded to Planning Commission members at the meeting.

A copy of the Associate Construction proposal is available for review in the Building & Zoning Department at the Springboro City Building between the hours of 8:00 a.m. and 4:30 p.m., Monday through Friday, legal holidays excluded. The plans may also be reviewed on the City website at https://www.cityofspringboro.com/383/Planning-Commission-Submissions. Look for "Materials for July 12, 2023." No additional notifications will be mailed about this proposal while it is under review by Planning Commission, however all items submitted to the City will be available through the Planning Commission page on the City website at the location indicated above. Should the rezoning application move forward to City Council, adjacent property owners will be notified of a public hearing of City Council as required by state and local law.

For more information on the submitted preliminary plan contact Dan Boron, Planner, at (937) 748-6183, or danb@cityofspringboro.com.

Sincerely,

Chris Pozzuto, City Manager
City of Springboro

cc: Dan Boron, Planner
September Bee, Planning Commission Secretary

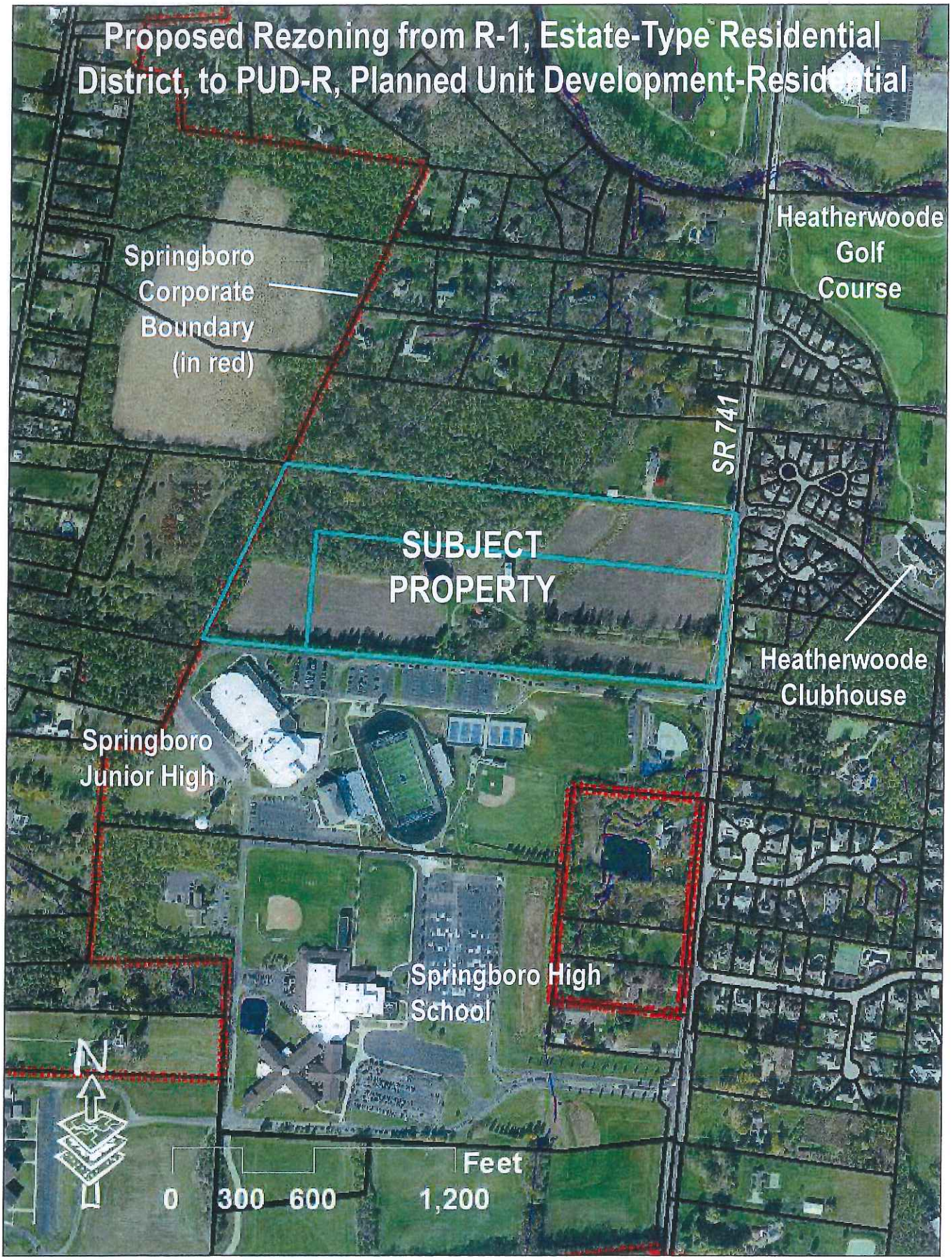
Proposed Rezoning from R-1, Estate-Type Residential District, to PUD-R, Planned Unit Development-Residential
Springboro Corporate Boundary (in red)
Heatherwoode Golf Course
SR 741
SUBJECT PROPERTY
Heatherwoode Clubhouse
Springboro Junior High
Springboro High School
N
0 300 600 1,200 Feet

M/I HOMES
Welcome to Better

Cincinnati Division
9349 Waterstone Boulevard, Suite 100
Cincinnati, OH 45249
513.248.5400 **OFFICE**

July 6, 2023

To: Property Owners Within 300' of Morris Property
Subject: Whispering Pines - Amendment of Zoning Map & General Plan Application

Dear Neighbor,

M/I Homes, on behalf of the Morris family, has submitted an application for an Amendment of Zoning Map & General Plan for the 35.62 acre property located at 1525 S. Main Street. The proposed plan (shown below) is 95 for sale single-family homes that will include both ranch and two-story plans from 1,500sf to more than 3,000sf (shown on next page). The plan features 10.6 acres (30%) of open space including the existing pond, walking trails, and a seating shelter.

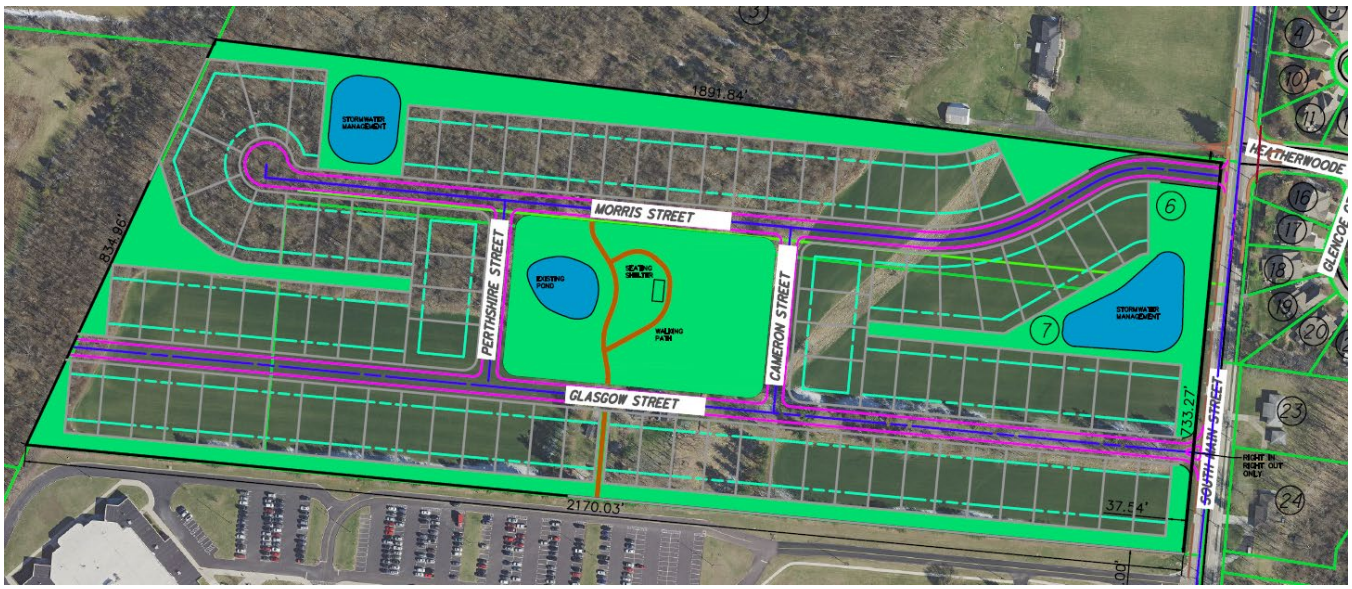

Should you have any questions, please do not hesitate to contact me by phone or email at your convenience.

Respectfully,

Justin Lanham
M/I Homes of Cincinnati, LLC
9349 Waterstone Boulevard, Suite 100
Cincinnati, OH 45249
(513) 833-2206
jlanham@mihomes.com

M/I HOMES
Welcome to Better

Cincinnati Division
9349 Waterstone Boulevard, Suite 100
Cincinnati, OH 45249
513.248.5400 **OFFICE**

Proposed House Plans

















Faulkner



Elevation B - Shown w/ Opt coach lights, black windows & Brick Wainscot



Elevation A - Shown w/ Opt coach lights & Brick Wainscot



Elevation C - Shown w/ Opt coach lights & Brick Wainscot

Square Feet: 1,544
Bedrooms: 2-3
Full Baths: 2

Half Baths: 0
Garages: 2
Stories: 1

Note: Other elevation materials available and may be required by community. See MIHomes.com for more elevations.

M/I HOMES
Welcome to Better

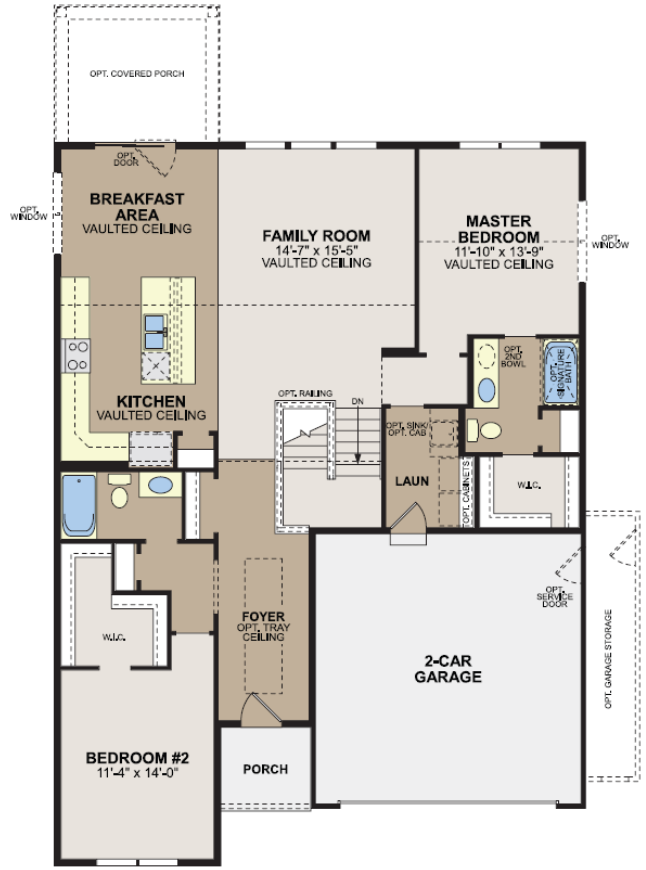

Because we are constantly improving our product, we reserve the right to revise, change, and/or substitute product features, dimensions, specifications, architectural details and designs without notice. This brochure is for illustration purposes only and is not part of a legal contract. Prices are subject to change without notice. Room dimensions are approximate and calculated from inside of partition. Printed 4-20

WHISPERING PINES

M/I HOMES

Cooper



Elevation C - Shown w/ Opt coach lights & Stone Wainscot



Elevation A - Shown w/ Opt coach lights & Brick Wainscot



Elevation B - Shown w/ Opt coach lights & Brick Wainscot

Square Feet: 1,776
Bedrooms: 3
Full Baths: 2

Half Baths: 0
Garages: 2
Stories: 1

M/I HOMES
Welcome to Better

"Note: Other elevation materials available and may be required by community. See MIHomes.com for more elevations."



Because we are constantly improving our product, we reserve the right to revise, change, and/or substitute product features, dimensions, specifications, architectural details and designs without notice. This brochure is for illustration purposes only and is not part of a legal contract. Prices are subject to change without notice. Room dimensions are approximate and calculated from inside of partition. Printed 4-20

WHISPERING PINES

M/I HOMES

Melville



Elevation B - Shown w/ Opt Coach Lights & Brick Wainscot



Elevation A - Shown w/ Opt Coach Lights & Brick Wainscot



Elevation C - Shown w/ Opt Coach Lights & Brick Wainscot

Square Feet: 1,865
Bedrooms: 3
Full Baths: 2

Half Baths: 0
Garages: 2
Stories: 1

Note: Other elevation materials available and may be required by community. See MIHomes.com for more elevations.

M/I HOMES
Welcome to Better

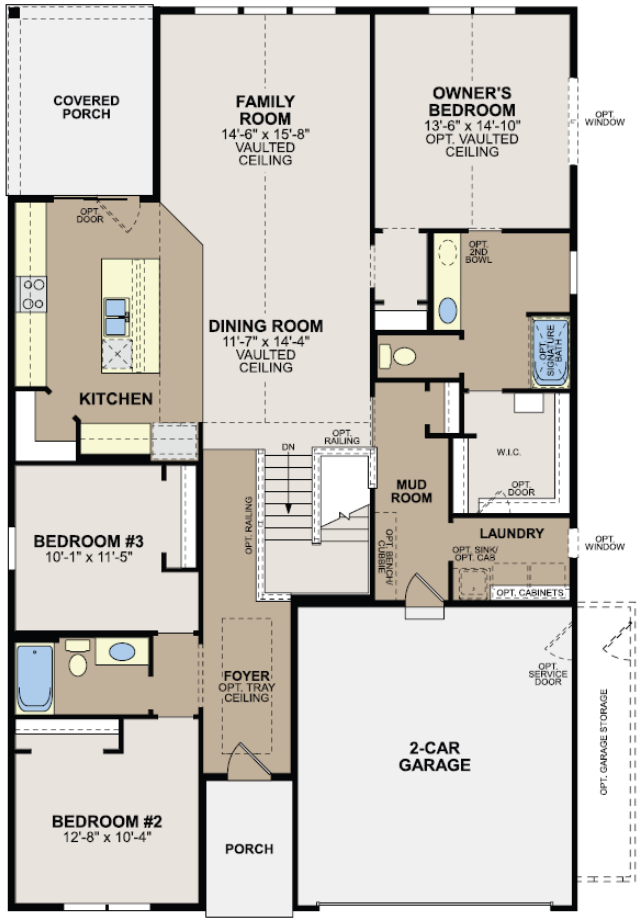

Because we are constantly improving our product, we reserve the right to revise, change, and/or substitute product features, dimensions, specifications, architectural details and designs without notice. This brochure is for illustration purposes only and is not part of a legal contract. Prices are subject to change without notice. Room dimensions are approximate and calculated from inside of partition. Printed 6-21

WHISPERING PINES

M/I HOMES

Serenity





Elevation B - Shown w/Opt Full Brick Front



Elevation C - Shown w/Opt Stone



Elevation E

Square Feet: 2,330
Bedrooms: 3
Full Baths: 2

Half Baths: 1
Garages: 2
Stories: 1

M/I HOMES
Welcome to Better

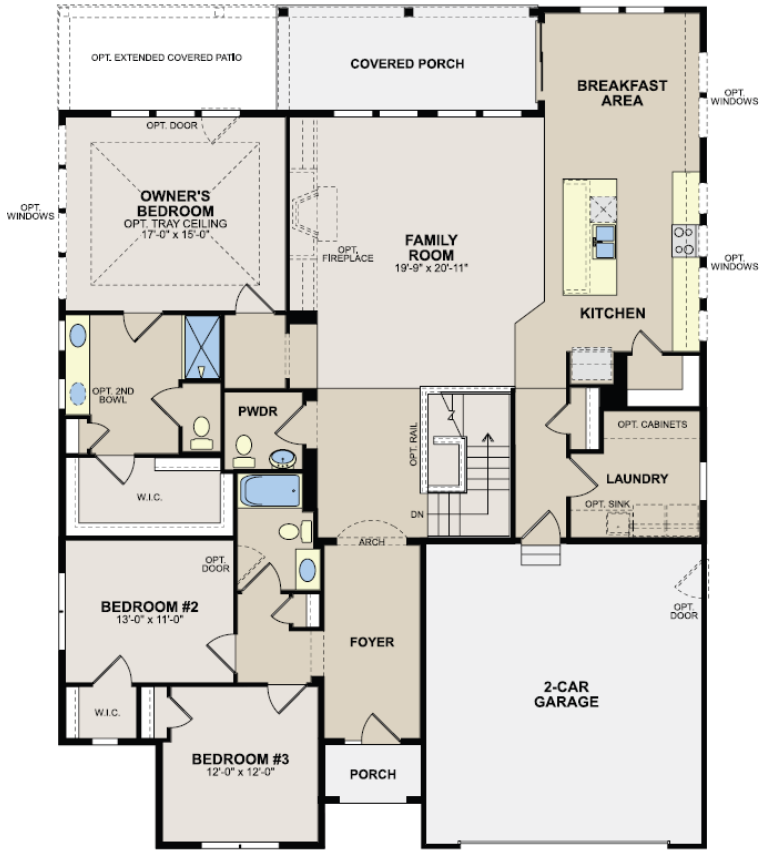

Because we are constantly improving our product, we reserve the right to revise, change, and/or substitute product features, dimensions, specifications, architectural details and designs without notice. This brochure is for illustration purposes only and is not part of a legal contract. Prices are subject to change without notice. Room dimensions are approximate and calculated from inside of partition. Printed 2-21

WHISPERING PINES

M/I HOMES

Dawson




Elevation A


Elevation D - Shown w/Opt Stone

Square Feet: 2,461
Bedrooms: 3
Full Baths: 2

Half Baths: 1
Garages: 2
Stories: 2

M/I HOMES
Welcome to Better

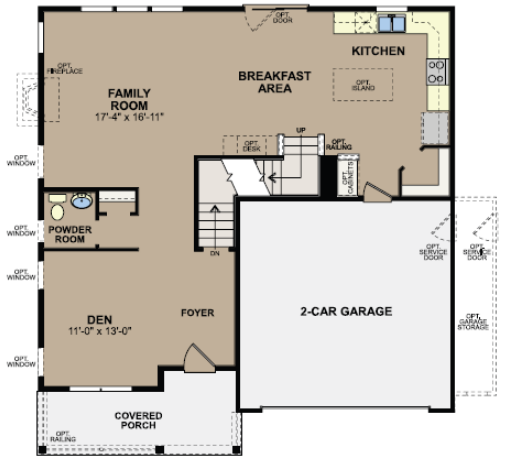

FIRST FLOOR



SECOND FLOOR

Because we are constantly improving our product, we reserve the right to revise, change, and/or substitute product features, dimensions, specifications, architectural details, and designs without notice. In addition, options shown may not be available in all communities. This brochure is for illustration purposes only and is not part of a legal contract. Prices are subject to change without notice. Room dimensions are approximate and calculated from inside of partition. Please see a New Home Consultant for details. Printed 09-21.

WHISPERING PINES

M/I HOMES

Inglewood



Elevation E - Shown w/ Opt Coach Lights



Elevation B - Shown w/ Opt Coach Lights



Elevation C - Shown w/ Opt Coach Lights



Elevation D - Shown w/ Opt Coach Lights

Square Feet: 2,558
Bedrooms: 3
Full Baths: 2

Half Baths: 1
Garages: 2
Stories: 2

M/I HOMES
Welcome to Better

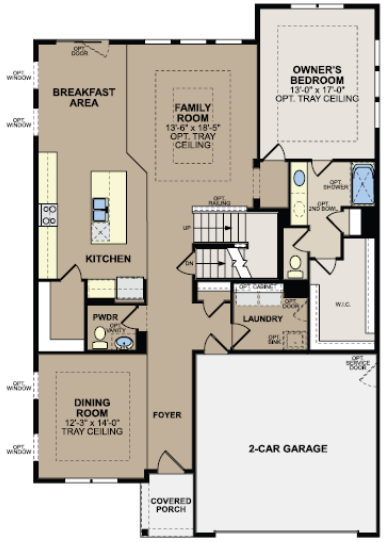

FIRST FLOOR



SECOND FLOOR

Because we are constantly improving our product, we reserve the right to revise, change, and/or substitute product features, dimensions, specifications, architectural details and designs without notice. This brochure is for illustration purposes only and is not part of a legal contract. Prices are subject to change without notice. Room dimensions are approximate and calculated from inside of partition. Printed 4-21.

WHISPERING PINES

M/I HOMES

Cooke



Elevation C - Shown w/Opt Stone and Bonus Room



Elevation A



Elevation B



Elevation E

Square Feet: 2,624
Bedrooms: 4
Full Baths: 2

Half Baths: 1
Garages: 2
Stories: 2

M/I HOMES
Welcome to Better



FIRST FLOOR



SECOND FLOOR

Because we are constantly improving our product, we reserve the right to revise, change, and/or substitute product features, dimensions, specifications, architectural details, and designs without notice. In addition, options shown may not be available in all communities. This brochure is for illustration purposes only and is not part of a legal contract. Prices are subject to change without notice. Room dimensions are approximate and calculated from inside of partition. Please see a New Home Consultant for details. Printed 09-22.

WHISPERING PINES

M/I HOMES

Dillon




Elevation A


Elevation B

Square Feet: 2,913
Bedrooms: 4
Full Baths: 2

Half Baths: 1
Garages: 2
Stories: 2

M/I HOMES
Welcome to Better



FIRST FLOOR



SECOND FLOOR

Because we are constantly improving our product, we reserve the right to revise, change, and/or substitute product features, dimensions, specifications, architectural details and designs without notice. This brochure is for illustration purposes only and is not part of a legal contract. Prices are subject to change without notice. Room dimensions are approximate and calculated from inside of partition. Printed 3-21.

WHISPERING PINES

M/I HOMES

Barrett



Elevation B - Shown w/Opt Coach Lights



Elevation A - Shown w/Opt Coach Lights



Elevation C - Shown w/Opt Coach Lights



Elevation D - Shown w/Opt Coach Lights

Square Feet: 3,035
Bedrooms: 4
Full Baths: 2

Half Baths: 1
Garages: 2
Stories: 2

M/I HOMES
Welcome to Better

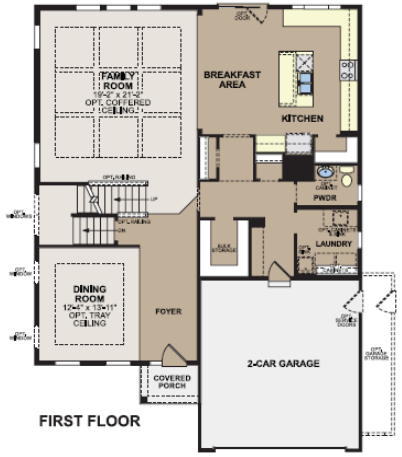

FIRST FLOOR



SECOND FLOOR

Because we are constantly improving our product, we reserve the right to revise, change, and/or substitute product features, dimensions, specifications, architectural details and designs without notice. This brochure is for illustration purposes only and is not part of a legal contract. Prices are subject to change without notice. Room dimensions are approximate and calculated from inside of partition. Printed 12-17

WHISPERING PINES

M/I HOMES

Fairview



Elevation E - Shown w/ Opt Coach Lights



Elevation A - Shown w/ Opt Coach Lights



Elevation B - Shown w/ Opt Coach Lights



Elevation C - Shown w/ Opt Coach Lights



Elevation D - Shown w/ Opt Coach Lights

Square Feet: 3,313
Bedrooms: 4
Full Baths: 2

Half Baths: 1
Garages: 2
Stories: 2

M/I HOMES
Welcome to Better



FIRST FLOOR

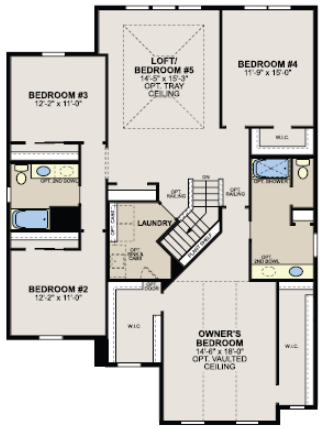

SECOND FLOOR

Because we are constantly improving our product, we reserve the right to revise, change, and/or substitute product features, dimensions, specifications, architectural details, and designs without notice. In addition, options shown may not be available in all communities. This brochure is for illustration purposes only and is not part of a legal contract. Prices are subject to change without notice. Room dimensions are approximate and calculated from inside of partition. Please see a New Home Consultant for details. Printed 9-22.

WHISPERING PINES

M/I HOMES

City of Springboro
320 West Central Avenue, Springboro, Ohio 45066
Planning Commission Meeting
Wednesday, June 14, 2023

I. Call to Order

Chair Becky Iverson called the Springboro Planning Commission Meeting to order at 6:00 pm at the Springboro Municipal Building, Council Chambers, 320 West Central Avenue, Springboro, Ohio.

Present: Becky Iverson, Chair, Chris Pearson, Vice Chair, John Sillies, and Mike Thompson

Staff Present: Dan Boron, City Planner; Elmer Dudas, Development Director; Chad Dixon, City Engineer; and Ann Burns, Planning Commission Secretary.

Mr. Pearson motioned to excuse Mr. Dimmitt, Mr. Harding and Mr. Leedy. Mr. Sillies seconded the motion.

Vote: Iverson, yes; Pearson, yes; Sillies, yes; Thompson, yes (4-0)

II. Approval of Minutes

A. May 10, 2023 Planning Commission Minutes

Ms. Iverson asked for corrections or additions to the minutes. There were none.

Mr. Sillies motioned to approve the May 10, 2023 Planning Commission minutes. Mr. Thompson seconded the motion.

Vote: Iverson, yes; Pearson, yes; Sillies, yes; Thompson, yes (4-0)

III. Agenda Items

A. Final Approval
Final Development Plan, 465 West Factory Road, Hills-Swope property of Wadestone subdivision, residential subdivision

Background Information

This agenda item is based on a request submitted by Grand Communities, LLC, Erlanger, Kentucky, seeking final approval of a final development plan for the Swope-Hills property portion of the proposed Wadestone subdivision located at 465 West Factory Road. The Swope-Hills property is a 28.7-acre site located that has frontage on West Factory Road. The naming of this property is to help in the explanation of the review and approval process only; the name is derived from the two former owners, the Swope family and Hills Development. The property is zoned PUD-R, Planned Unit Development-Residential. A revised general plan for the property was approved at the February 8th Planning Commission meeting. Final development plan is the second step of the three-step PUD approval process.

DRAFT

While related, the other portion of the Wadestone subdivision, the Wade-Wray property located at 2515 West Factory Road, is not under review at this time. That property is zoned R-1, Low-Density Residential District, and no final development plan review is involved with R-1 District or other conventionally-zoned developments. Following final development plan review and approval of the Swope-Hills portion of the Wadestone subdivision, Planning Commission review of the record plan for both the Swope-Hills and Wade-Wray properties will move forward including the platting of lots and the dedication of rights-of-way and common areas. Approval of both record plans is required to provide secondary access to each development as required under the City's Planning and Zoning Code.

Adjacent uses include single-family residential to the north in the Royal Oaks, Spring Park, and Sawgrass Pointe subdivisions, to the east residential dwellings fronting West Factory Road as well as the Springboro Cemetery, the latter in Clearcreek Township, farmland and undeveloped land to the south also in Clearcreek Township, and to the west the developing Wade-Wray property. Zoning in the vicinity includes R-2, Low-Density Residential District to the north and east in the City of Springboro including Royal Oaks/Spring Park/Sawgrass Pointe. In Clearcreek Township, R-1, Rural Resident District, to the east, SR-1, Suburban Residence District, to the south and southeast, and R-1 District to the west.

This item was reviewed on a preliminary basis at the May 10th Planning Commission meeting at which time the Planning Commission authorized this item to be placed on a future agenda for formal action. Courtesy notification letters were sent out to all property owners within 300 feet of the subject properties the week prior to the Planning Commission's general plan review that started at the October 12th Planning Commission meeting.

Staff Recommendation

City staff recommends approval of the final development plan for the Swope-Hills property of the Wadestone subdivision, 465 West Factory Road conditioned on the following comments:

1. No more than 19 lots may be platted in this subdivision without the benefit of a second access to a public right-of-way in the adjacent Wade-Wray property located at 2515 West Factory Road.
2. Applicant to review Section 1264.06, Development Standards for Specific Uses, Single-Family Dwellings (Detached) for compliance of some of the home plans with (b) Appearance, and (c) Garages with respect to 60% maximum width and side/rear access.
3. Developer to provide landscaping plan consistent with Chapter 1280, Landscaping. Existing landscaping to be retained greater than 4 inches DBH may be credited against Chapter 1280 requirements.
4. Development is not permitted in the Floodway.
5. Engineering comments are reserved until such time when designed improvements are completed on construction drawings, including but not limited to: easements, water, sanitary, storm sewer, detention basin, and bridge design.
6. Insert Clearcreek Fire District comments here.

Discussion:

Mr. Robert Hayes of Fischer Homes/Grand Communities was present to discuss their application for final development of 465 West Factory Road.

Ms. Iverson asked Mr. Hayes if he had any questions regarding the staff comments.

Mr. Hayes replied that he did not have any questions.

Mr. Boron gave a brief synopsis of the history of this property. The final development plan submitted is for the Swope-Hills portion of this subdivision. Because this property is a PUD, this final administrative review step is required. This is for this portion only of the Wadestone development; the remainder of the property is zoned conventionally and will continue through the normal construction plan review process.

Ms. Iverson asked the Planning Commission if they had any questions.

Mr. Sillies asked what the next steps would be in this process.

Mr. Boron replied that the next item which will come before the Planning Commission will be the record plan for both the Swope Hills and the Wade Wray sections of the development. This will be to record the lots, common areas, and right-of-ways for both parcels of the subdivision. The Engineering Department is currently reviewing the construction plans. Planning Commission members will see the record plans later this year.

Ms. Iverson asked for any guest comments.

There were no guest comments.

Ms. Iverson called for a motion for Final Approval, Final Development Plan, 465 West Factory Road, Swope-Hills property of Wadestone subdivision, residential subdivision.

Mr. Thompson motioned to approve. Mr. Pearson seconded the motion.

Ms. Iverson called for discussion.

Ms. Iverson called for roll call.

Vote: Iverson, yes; Pearson, yes; Sillies, yes, Thompson, yes (4-0)

Ms. Iverson said that the motion is approved unanimously.

DRAFT

B. Final Approval
Record Plan, Springboro Business Park, Section Five.

Background Information

This agenda item is a request for record plan approval to allow the split of a parcel of land located at 100 South Pioneer Drive, the former home of Pioneer Electronics, to create two new lots on the nor-developed portion of the property. A 13.190-acre parcel that includes the former Pioneer Electronics facility will be situated on the southwest corner of South Pioneer Drive and Pleasant Valley Drive, while new parcel 1 will be 12.030 acres, and new parcel 2 will be 15.000 acres will be created to the south.

Following Planning Commission, approval of the record plan by City Council is required.

Staff Recommendation

City staff recommends approval of the record plan including the following comments:

1. The first line of title block shall be "Record Plan". Then revise title block to Springboro Business Park Section Five along with associated text regarding being a replat of Lot 6 of Section Three and part lot 5 of section 2. Re-number the proposed lots to the next highest platted lot number (8, 9, 10?).
2. Revise signature block to City of Springboro standards.
3. Remove approval signature blocks for Zoning Inspector, Regional Planning Commission, and County Engineer.
4. Remove note 12.
5. Add Covenants and Restrictions language as found on Plat Book 16, Pg 29.
6. Site Map difficult to read.
7. Add note stating size of iron pins to be set.
8. Add iron pins at all angle changes along lot lines, particularly along the north line of proposed lot 2.
9. Reduce the existing conditions pen weight, as it is hard to see lot lines and proposed text.
10. Provide dimension from parking lot to proposed lot line to confirm minimum distance of 9 feet is met.
11. Record plan is difficult to scale correctly. Provide clean plan set.
12. Remove all Warren County and Township Commissioner notes on title sheet.
13. Add City of Springboro as the first public utility provider in the public utility easement note block.
14. Add roof and foundation drain note per city standards.
15. Remove zoning table.
16. Resubmit revised record plan for staff review, as well as submitting it to Warren County for their review.

Discussion:

Mr. Gavin Rivera of Kimley-Horn was present on behalf of their clients to discuss the application for final approval of the record plan for Springboro Business Park, Section Five.

Ms. Iverson asked Mr. Rivera if he had any questions regarding the staff comments.

Mr. Rivera said that he did not have any questions at this time.

Ms. Iverson asked Mr. Boron if he had any additional comments.

DRAFT

Mr. Boron stated that he would because this item is a record plan, he would defer to Mr. Dudas and the Engineering Department for comments. This item will have to have a recommendation to go before City Council for final approval in order to finalize the record plan.

Mr. Dudas said that once the plan is ready, the Engineering Department will move this item on to City Council.

Ms. Iverson asked if Planning Commission members had any questions.

Mr. Sillies asked if this was part of Sunstar's expansion.

Mr. Rivera stated that there are no definitive plans for occupancy at this time.

Mr. Boron said that up to three lots will be created.

Ms. Iverson called for a motion to approve the record plan, Springboro Business Park, Section Five.

Mr. Pearson motioned to approve. Mr. Sillies seconded the motion.

Ms. Iverson called for discussion.

Ms. Iverson called for roll call.

Vote: Iverson, yes; Pearson, yes; Sillies, yes, Thompson, yes (4-0)

Ms. Iverson said that the motion is approved unanimously.

DRAFT

C. Final Approval
Record Plan, South Tech, Section Twenty

Background Information

This agenda item is a request for record plan approval for South Tech, Section Twenty filed by The Kleingers Group, West Chester. The property is located northwest of the intersection of South Tech Boulevard and Industry Lane and includes an existing building at 3233 South Tech Boulevard. The record plan would allow for the split of the parcel to create a 4.1974-acre lot on the west side of the property. Agenda item D below is related to this record plan approval request.

Following Planning Commission's review, approval of the record plan by City Council is required.

Staff Recommendation

City staff recommends approval of the record plan including the following comments:

1. Provide existing building location with setbacks to lot lines.
2. Easements to match construction drawings.
3. Provide access easement language.
4. Provide standard signature block for City of Springboro.
5. Add city standard roof and foundation drains note.
6. First line on title block to read "Record Plan".

Discussion:

Mr. Brandon Rose of Ferguson Construction was present to discuss the application for final approval of the record plan for South Tech, Section Twenty.

Ms. Iverson asked Mr. Rose if he had any questions about the staff comments.

Mr. Rose said that he had no questions at this time.

Mr. Boron stated that this item would have to be a recommendation to City Council in order to approve the record plan. He then deferred to Mr. Dudas to explain what the next step in this process will be.

Mr. Dudas said that when the record plan was ready it would be moved to City Council for final approval.

Mr. Boron said that item is related to Agenda Item D which has been submitted for preliminary review at this evening's meeting.

Ms. Iverson asked for any comments or questions.

There were no questions at this time.

Ms. Iverson called for a motion to approve the record plan for South Tech, Section Twenty.

Mr. Thompson motioned to approve. Mr. Pearson seconded the motion.

DRAFT

Ms. Iverson called for discussion.

Ms. Iverson called for roll call.

Vote: Iverson, yes; Pearson, yes; Sillies, yes, Thompson, yes (4-0)

Ms. Iverson said that the motion is approved unanimously.

D. Preliminary Review
Site Plan, 3233 South Tech Boulevard, new commercial building for Innomark

Background Information

This agenda item is a request for preliminary review of a site plan for the construction of a 96,000-square foot office/manufacturing/warehouse building for Innomark Real Estate, LLC, property owner at 3233 South Tech Boulevard in the South Tech Business Park. The proposed site is subject to a record plan that is agenda item C at the June 14th Planning Commission meeting.

Adjacent land uses include to the north, undeveloped land that is in the Springboro portion of the Austin Landing development fronting the I-75/Austin Boulevard interchange, to the east Innomark's existing facility at 3233 South Tech Boulevard, to the south Invotec at 10909 Industry Lane on the southwest corner of Industry Lane and South Tech Boulevard, and Kingscoat at 3334 South Tech Boulevard, and to the west Renegade at 3363 South Tech Boulevard.

Adjacent zoning to the north is ADD-2, Austin Development District 2, and to the east, south, and west, ADD-1, Austin Development District 1.

Staff Comments

1. Provide building population at maximum shift for determination of off-street parking requirement.
2. Provide lot coverage percentage for subject property.
3. For final approval of site plan, revise exterior lighting plan in compliance with Chapter 1273, Exterior Lighting, of Planning and Zoning Code, to improve legibility of data points on sheet 2 of 2, provide light fixtures specification sheet, confirm all color-temperature is 3500° or less, provide maximum to minimum (10:1) and average to minimum (4:1) ratios, and note that foot-candles may be no higher than 6.0.
4. For final approval of site plan, coordinate with staff on landscaping consistent with ADD-1 requirements.
5. Signage plan for building/site subject to review by Zoning Inspector for compliance with Sign Code, Chapter 1281, of Planning and Zoning Code outside of the site plan review process.
6. The curb cut along South Tech Boulevard shall have the existing curb and gutter removed and replace with ODOT Type 2 depressed curb and gutter, with minimum 7" concrete drive apron.
7. Provide Storm water pollution prevention plan.
8. Provide graphic scale on all applicable sheets.
9. Easements to match record plan.
10. Montgomery County to review water and sewer design.
11. Concrete storm sewer required in the right of way.
12. We will require the purchase and installation of a Knox Box to be installed and located at the front entrance of the facility.

13. Fire Department Connections (FDC) for all sprinkled buildings shall be with-in 75 feet of a fire hydrant on the public water system. All fire department connections must have a 5" Stortz connection with a 30 degree downturn and includes a cap attached by a cable.
14. A fire extinguisher plan must be submitted to the Fire District. Placement and installation must be completed prior to final building replacement.
15. Building requires a minimum 4" contrasting address numbers near main entrance. Must be visible from the road.
16. A scaled floor plan is required at or before of final building inspection showing occupant load, location of exits, electrical and gas shut offs, fire department connections and other applicable information as may be useful in conducting pre-incident preparation by Fire District. The acceptable size of this plan is 8.5 inches by 11 inches.
17. All testing of all systems shall be scheduled through the Springboro Building Department at (937) 748-9791. All test shall be scheduled 48 hours in advance of testing. The Fire Marshal or Fire District representative will witness all testing.

Discussion:

Mr. Brandon Rose, Mr. Kevin McCormick, and Mr. Jeff King were present to discuss the application for preliminary review, Site Plan, 3233 South Tech Boulevard, new commercial building for Innomark.

Ms. Iverson asked Mr. Boron for a summary of the project up for preliminary review by the Planning Commission.

Mr. Boron reviewed the plans and said Innomark is creating a separate lot and then building a 96,000-square foot building on that site. It meets all requirements for ADD-1, Austin Development District 1, and the use is permitted on this site. The staff comments are typical for this stage in planning; lighting, landscaping and peripheral items.

Ms. Iverson asked if the applicants had any questions or comments regarding the staff comments.

Mr. King responded that they plan to comply with all staff comments and will re-submit their plans the week of June 23, 2023.

Mr. Rose reviewed the site plan with Planning Commission and staff members. The new building will be constructed of concrete panels. New additional parking will be added across the front and side with some additional parking provided near the six new delivery docks. Utilities were reviewed as well.

Mr. Thompson asked what the anticipated occupancy would be in the new building.

Mr. King said that currently they have 67 employees working in their facility over the course of three shifts. They will supply Planning Commission and staff with a breakdown of the number of employees that will be in the building per shift when they re-submit their plans. There will be offices located in the front of the building with warehouse and manufacturing space located in the rear portion of the building.

Mr. Boron commented that Innomark will be moving from their existing property located at West Tech and SR 741 to this new facility. They are currently tenants in the building where they are now and will own the new building they are proposing.

Mr. Sillies asked about the height of the new building.

Mr. Rose said that the building will constructed with pre-cast concrete panels which will be 34 feet high. There will be a large landscape retaining wall along the driveway between the buildings.

Mr. Boron added that the building is in compliance with the district code permitted use. This district does allow for higher buildings which is the goal of the ADD-1.

Ms. Iverson thanked the applicants for all their work and for staying within Springboro.

E. Preliminary Review

Final Development Plan, Southwest Corner East Central Avenue (SR 73) and Red Lion-Five Points Road, Clearview Crossing at Stoneridge PUD-R, Planned Unit Development-Residential, residential subdivision.

Background Information

This agenda items is a request for preliminary review of the final development plan filed by LSSE, Dublin, Ohio, on behalf of Maronda Homes of Cincinnati. The final development plan would allow for the development of a 41-dwelling unit subdivision by Maronda Homes on the southwest corner of East Central Avenue (SR 73) and Red Lion-Five Points Road. The 12.08-acre site was rezoned to PUD-R, Planned Unit Development-Residential, earlier this year concurrently to the approval of a general plan outlining the plan for the conceptual layout of lots, streets, and open space in the subdivision. The rezoning and general plan were approved by the Planning Commission at their January 18th meeting; the rezoning was approved by City Council on April 6th (effective date May 6th) along with the general plan.

Final development plan review is the second stage of the three-step approval process for PUDs. The final development plan provides more detailed information, building on the general plan including proposed lots, streets, and open space. No action is required of City Council on the final development plan. Record plan review and approval by both Planning Commission and City Council is the last step in the PUD approval process.

Adjacent land uses in Springboro include the North Hills subdivision to the north on the north side of East Central Avenue (SR 73), and The Enclave subdivision to the south. In Clearcreek Township, single-family residential in the Stoneridge subdivision to the east, and to the west single-family residential along the south side of East Central Road, and on the north side of East Central Road farmland.

Adjacent zoning in the Springboro portion of the vicinity is PUD-R for both North Hills and The Enclave. In Clearcreek Township the Stoneridge subdivision to the east is zoned R-1, Rural Residence, and lands to the west are zoned SR-1, Suburban Residence.

Courtesy notification letters were sent out to all property owners within 300 feet of the subject property prior to the October 12th meeting. As stated at that meeting no follow-up letters will be mailed while this project is under review by Planning Commission, however City staff has notified The Enclave Homeowners Association (HOA) of the proposal being on the agenda. Should this proposal move forward, the same property owners will be notified of a Public Hearing of City Council on the rezoning of the property.

Staff Comments

City staff has the following comments on this agenda item:

1. Provide housing plans for incorporation into the final development plan approval. All homes to be consistent with Section 1264.06, Development Standards for Specific Uses, Single-Family Dwellings (Detached) for compliance of some of the home plans with (b) Appearance, and (c) Garages with respect to 60% maximum width and side/rear access.
2. Revise landscaping plan prior to record plan review process to address needs for site landscaping (175 trees), street trees (1 tree per 40 linear feet of frontage), and perimeter plants (1 tree per 40 feet of frontage) per Chapter 1280 of Planning and Zoning Code. Note that existing landscaping 4 inches DBH may be credited against Chapter 1280 requirements.
3. Development signage, if proposed, to be reviewed by Zoning Inspector for compliance with Sign Code and sight distance requirements. Same applies to construction and other temporary signage.
4. Provide graphic scale on all applicable streets.
5. Provide turnaround along bike path at the west side of water vault adjacent to SR 73.
6. Clear the vegetation along the west side of the property within the existing 30 foot sanitary sewer easement.
7. Remove construction drawings from final development plan submittal. The construction drawings will be reviewed and approved by engineering staff.
8. Insert Clearcreek Fire District comments here.

Discussion:

Ms. Joanne Shelly of LSSE, and Mr. Brian Hoesl with Maronda Homes were present to discuss the application for preliminary review, Final Development Plan, Southwest Corner East Central Avenue (SR 73) and Red Lion-Five Points Road, Clearview Crossing at Stoneridge PUD-R, Planned Unit Development-Residential, residential subdivision.

Ms. Iverson asked Mr. Boron to summarize the project.

Mr. Boron said that Planning Commission has seen this information before and City Council just approved the general plan, so they are now back before Planning Commission for formal approval of the final development plan submitted. This second phase, final development of the PUD, includes more detailed drawings for engineering staff to review and comment on for this project.

Ms. Shelly said that they have finalized the finished grades, making sure all the houses have the right bench and are flat; the roads meet all the grade requirements, curbs and gutters have been placed appropriately and the storm water system works as required. The turn lane to Red Lion-Five Points Road has been added, along with widening the right-of-way as requested.

Ms. Shelly addressed Mr. Dudas' comments regarding engineering as well as staff comments regarding landscaping and tree counts. With regards to the existing stream that is on the property, LSSE proposes to create a 10 foot wide multi-use trail along the property line with a tree buffer. They will create a loop at the west end of the trail so that users can easily turn around when they reach the end of the trail. An access point has been added so that there is connectivity all the way to the park. The trail will also connect to the existing sidewalk in the neighborhood to the south. The sidewalks within the development will be five feet wide.

Mr. Boron said that this plan would allow for trail connectivity from SR 73 all the way to Heatherwoode. He said that once plans have been submitted, staff may have additional comments on the trail.

Ms. Shelly said that the reason for the line of the trail is due to grading, they wanted to keep the grade below 5% as required. She believes they will be ready for the July Planning Commission meeting.

F. Preliminary Review

Site Plan Review, North of Intersection of West Central Avenue and Tahlequah Trail, proposed Taco John's.

Background Information

This agenda item is a request for preliminary review of a site plan, filed by Evans Engineering, Cincinnati, Ohio, proposing the development of a 2,100-square foot Taco John's restaurant.
The site is located northwest of the intersection of Tahlequah Trail and West Central Avenue (SR 73) on a vacant site. The proposed restaurant is a permitted use in the HBD, Highway Business District, the zoning district that overlays the site.

Access to the site is provided by the public right-of-way that parallels West Central Avenue that in turn connects to the signal on West Central Avenue immediately to the west of the subject property.

Adjacent uses include to the north and east undeveloped land on the parent parcel to the subject property, to the south on the south side of West Central Avenue Popeye's and the site of the former Long John Silver's, and to the west KFC and Taco Bell. Adjacent zoning for the vicinity of the subject property is HBD.

Staff Comments

City staff has the following comments on this preliminary plan:

1. Provide improvements per the recommendations of the traffic study.
2. Provide record plan dedicating the West Central Avenue right-of-way.
3. Remove offsite proposed sign, which is not permitted per sign code. Remainder of signage package to be reviewed with Zoning Inspector outside the site plan review process.
4. Exterior elevations to include one accent color.
5. Provide indication of seating plans and other information used to determine volume of off-street parking proposed in site plan.
6. Provide location for bicycle rack consistent with Planning and Zoning Code within 50 feet of front entrance and providing setbacks to provide clean movement around site parking area.
7. As part of final approval, applicant to provide lighting plan consistent with Chapter 1273, Exterior Lighting, of Planning and Zoning Code.
8. Provide dimension on building placement to proposed property lines.
9. Indicate exterior building materials on sheet(s) A30. Also revise or remove sheet A90 information not pertinent to Planning Commission review.
10. Verify dumpster enclosure proposed color.
11. Landscaping plan to be revised and submitted as part of final approval that includes screening from adjacent uses, parking lot, site, and landscaping for the West Central Avenue frontage.
12. Provide storm water detention calculations for review.
13. Capture storm water in the front yard setback area into detention pond.

14. Separate the water spigot from the water service prior to entering building. The connection shall be made after meter, inside of building.
15. Provide water lateral size. Provide K copper to curb box, and then HDPE material (SDR 9, 250 PSI) for runs over 100 feet. Provide curb box shut off adjacent to water tap at existing main.
16. Remove existing curb and gutter at driveways and replace with ODOT Type 2 depressed curb and gutter.
17. Provide pavement replacement details at all utility crossings.
18. Provide bicycle safe grates at catch basins where applicable.
19. Additional engineering comments are reserved until such time when designed improvements are completed on construction drawings, including but not limited to: easements, water, sanitary, storm sewer, and detention basin.
20. We will require the purchase and installation of a Knox Box to be installed and located at the front entrance of the facility.
21. Building requires a minimum 4" contrasting address numbers near main entrance. Must be visible from the road.
22. A fire extinguisher plan must be submitted to the Fire District. Placement and installation must be completed prior to final building inspection.
23. A scaled floor plan is required at or before the final building inspection showing occupant load, location of exits, electrical and gas shut off, fire department connections and other applicable information as may be useful in conducting pre-incident preparation by the Fire District. The acceptable size of the plan is 8.5 inches by 11 inches.
24. All testing of all systems will be scheduled through the Springboro Building Department at (937) 748-9791. All test shall be scheduled 48 hours in advance of testing. The Fire Marshal or Fire District representative will witness testing.

Discussion:

THIS ITEM WAS REMOVED FROM THE AGENDA AT THE REQUEST OF THE APPLICANT.

G. Preliminary Review

Major Revision to Approved General Plan, Village Park PUD-MU, Planned Unit Development-Mixed Use, change in list of permitted uses in retail component

Background Information

This agenda item is based on an application filed by Dryden Builders, Centerville, seeking preliminary review of a major revision to the approved general plan for the Village Park PUD-MU, Planned Unit Development-Mixed Use, on behalf of Sahana Properties, LLC, property owner. The Village Park PUD-MU, approved in 2004, includes four components including a retail component centered on the southeast corner of the property. The retail component, in addition to the subject property, includes El Toro restaurant on the south to the Fifth/Third Bank branch on the north.

The retail component does not permit drive through facilities as a permitted use. The applicant submitted a final development plan that included such a facility included on the plans for a site adjacent to their existing business/property that includes Springboro Wine & Spirits, 748 Gardner Road. The only manner in which to permit the use in the PUD is to revise it, in this case a major revision which is defined in the PUD Chapter of the Planning and Zoning Code as any change that results in a development density increase of 15% or a change in the list of permitted uses. The process to a major revision the general plan includes review by

Planning Commission including a public hearing, similar to a public hearing of City Council for rezoning where property owners within 300 feet are notified, and the request is advertised in the paper of mass circulation. Action by City Council in the form of a resolution is also required. Following that process, a final development plan that includes the drive through then may be finalized. This will allow the applicant to submit a complete final development plan application, it is incomplete at this time, as well as coordination with City staff on a number of comments listed below for the final development plan.

Adjacent uses to the subject property include Springboro Wine & Spirits to the north, Huntington Bank to the east on the east side of North Main Street, Biggby's/Farmers & Merchants Bank to the south, and vacant land to the west on the west side of Gardner Road.

Zoning adjacent to the subject property is PUD-MU, for properties to the north, south, and west as part of the Village Park mixed-use development, and PUD for property to the east that is part of the Settlers Walk development on the east side of North Main Street.

Staff Comments

City staff has the following comments on the major change to the general plan:

1. Applicant to complete revision to general plan submission requirements; please coordinate with City staff on details.
2. Planning Commission to set public hearing following preliminary review.

City staff has the following comments on the proposed final development plan following completion of the general plan major revision process:

1. Applicant to provide exterior building elevations for both proposed buildings indicate size of building, exterior materials, and include a graphic scale.
2. Indicate what is driving the volume of parking proposed for site in terms of seating and building population.
3. Provide location for bicycle rack consistent with Planning and Zoning Code within 50 feet of front entrance and providing setbacks to provide clean movement around site parking area.
4. Final development plan review process to include lighting plan consistent with Chapter 1273, Exterior Lighting Plan, of the Planning and Zoning Code.
5. Final development plan to include landscaping plan consistent with Chapter 1280, Landscaping, of the Planning and Zoning Code as well as design standards of the Village Park PUD.
6. Signage to be reviewed by Zoning Inspector outside of final development plan review process of Planning Commission.
7. If permitted, drive through facility to be screened along with rooftop and ground-mounted mechanical equipment.
8. Indicate State scale on drawing (1"=20 feet).
9. Make access road on north side two way traffic, adjust pavement accordingly.
10. Combine the two lots into one.
11. Provide bicycle safe grates at catch basins where applicable.
12. Provide detention calculations. Additional engineering comments are reserved until such time when designed improvements are completed on construction drawings, including but not limited to: easements, water, sanitary, and storm sewer.
13. The curb cut along Gardner Road shall have the existing curb and gutter removed and replace with ODOT Type 2 depressed curb and gutter.
14. Provide elevations of north, south, east, and west sides of both proposed buildings.

DRAFT

15. We will require the purchase and installation of a Knox Box to be installed and located at the front entrance of the facility.
16. Building requires a minimum 4" contrasting address numbers near main entrance. Must be visible from the road.
17. A fire extinguisher plan must be submitted to the Fire District. Placement and installation must be completed prior to final building inspection.
18. A scaled floor plan is required at or before the final building inspection showing occupant load, location of exits, electrical and gas shut off, fire department connections and other applicable information as may be useful in conducting pre-incident preparation by the Fire District. The acceptable size of the plan is 8.5 inches by 11 inches.
19. All testing of all systems will be scheduled through the Springboro Building Department at (937) 748-9791. All test shall be scheduled 48 hours in advance of testing. The Fire Marshal or Fire District representative will witness testing.

Discussion:

Mr. Chris Hinkle, Dryden Builders, and Mr. GB Bhatara were present to discuss the application for preliminary review, Major Revision to Approved General Plan, Village Park PUD-MU, Planned Unit Development-Mixed Use, change in list of permitted uses in retail component.

Ms. Iverson asked Mr. Boron to summarize the project.

Mr. Boron said the Village Park PUD is composed of four components; open space (Gardner Park), residential (Parkside Row Apartments), office, and retail. The site up for review at this meeting is the last undeveloped parcel designated for retail use. The applicant has proposed a building with a drive through attached; drive throughs are not permitted at this time.

Mr. Hinkle said the applicant would like to make at least a portion of the building a restaurant which typically would have a drive through. Additional businesses to be included in the building would either be offices or a retail site.

Mr. Pearson asked how Biggby Coffee was able to get their drive through approved.

It was determined that because the bank was already existing with the carve-out for their drive through, the additional drive through was permitted.

Planning Commission members voiced their concerns about having a high volume drive through coming into the space.

Mr. Boron stated that that would be highly unlikely given the fact that this is the last retail parcel available for purchase in this PUD.

Ms. Iverson asked about the traffic flow; would it be improved?

Mr. Hinkle stated that they would probably combine the two lots to allow for better traffic flow than currently exists. Dumpster areas would be consolidated as well. This would require making changes to the record plan in the future.

Mr. Boron said the City would conduct a traffic study if Planning Commission decides to move ahead with this project. Mr. Hinkle and Mr. Dixon are working together to get the traffic study completed.

Ms. Iverson asked if any Planning Commission members had any further concerns.

The general consensus among Planning Commission members was that as long as the appropriate screening is included along SR 741 a drive through or patio would be acceptable.

Mr. Hinkle asked about what the timeline would look like moving forward.

Mr. Boron stated that because this is like rezoning, a Public Hearing would be set by Planning Commission, all business owners within 300 feet would be notified by letter. Preliminary site plan approval would follow if Planning Commission decides to approve the rezoning.

Ms. Iverson asked for additional Planning Commission or staff comments.

Mr. Boron said that they would need to set a public hearing at this meeting for the meeting on July 12.

Ms. Iverson called for a motion to set a public hearing for a major revision, Village Park PUD-MU.

Mr. Pearson motioned to approve. Mr. Thompson seconded the motion.

Ms. Iverson called for discussion.

Ms. Iverson called for roll call.

Vote: Iverson, yes; Pearson, yes; Sillies, yes, Thompson, yes (4-0)

Ms. Iverson said that the motion is approved unanimously.

IV. Guest Comments

There were no guest comments.

V. Planning Commission and Staff Comments

Ms. Iverson asked for further questions. There were none.

DRAFT

V. Adjournment

Ms. Iverson called for a motion to adjourn.

Mr. Pearson motioned to adjourn the June 14, 2023 Planning Commission Meeting at 7:00 pm
Mr. Thompson seconded the motion.

Vote: Iverson, yes; Pearson, yes; Sillies, yes; Thompson, yes (4-0)

_____
Becky Iverson, Planning Commission Chairperson

_____ _____
Dan Boron, Planning Consultant September Bee, Planning Commission Secretary

DRAFT